OHIO
NORTHERN
UNIVERSITY
LIBRARY

Digitized by the Internet Archive
in 2025

https://archive.org/details/bwb_S0-BMY-843

PROCEEDINGS

OF THE

American Gas Institute

THIRD ANNUAL MEETING

OCTOBER 21, 22, 23, 1908

NEW YORK, N. Y.

PUBLISHED BY THE INSTITUTE

EDITED BY THE PUBLICATION COMMITTEE

1909

CHARLES F. BLOOM
150-152 WM. ST. NEW YORK.

5/2P
08P

OFFICERS

OF THE

AMERICAN GAS INSTITUTE

1907—1908

THIRD ANNUAL MEETING

OCTOBER, 1908

President

ALEXANDER C. HUMPHREYS.....New York, N. Y.

First Vice President

HENRY L. DOHERTY.....New York, N. Y.

Second Vice President

WILLIAM A. BAEHR.....St. Louis, Mo.

Secretary and Treasurer

JAMES W. DUNBAR.....New Albany, Ind.

DIRECTORS

WALTON CLARK.....	Philadelphia, Pa.....	Ex-Officio	
FREDERICK H. SHELTON..	Philadelphia, Pa..	Term Exp.	1908
H. D. WHITCOMB, JR....	Newark, N. J....	" "	1908
JAMES T. LYNN.....	Detroit, Mich....	" "	1908
L. L. KELLOGG.....	Sioux City, Ia....	" "	1908
F. W. STONE.....	Ashtabula, Ohio..	" "	1908
WALTON FORSTALL.....	Philadelphia, Pa..	" "	1909
EDWARD G. COWDERY...	Chicago, Ill.....	" "	1909
KERR M. MITCHELL.....	St. Joseph, Mo....	" "	1909
JAMES H. JOURDAN.....	Brooklyn, N. Y...	" "	1909
J. ARNOLD NORCROSS...	New Haven, Conn.	" "	1909

OFFICERS
OF THE
AMERICAN GAS INSTITUTE
1908—1909

President

CHARLES F. PRICHARD.....Lynn, Mass.

First Vice President

WILLIAM H. GARTLEY.....Philadelphia, Pa.

Second Vice President

DONALD MCDONALD.....Louisville, Ky.

Secretary and Treasurer

ALBERT B. BEADLE.....New York, N. Y.

DIRECTORS

ALEX. C. HUMPHREYS	New York, N. Y.	....	EX-OFFICIO	
WALTON FORSTALL	Philadelphia, Pa.	Term Exp.		1909
EDWARD G. COWDERY	Chicago, Ill.	"	"	1909
K. M. MITCHELL	St. Joseph, Mo.	"	"	1909
JAS. H. JOURDAN	Brooklyn, N. Y.	"	"	1909
J. ARNOLD NORCROSS	New Haven, Conn.	"	"	1909
JOHN D. SHATTUCK	Chester, Pa.	"	"	1910
WILLIAM A. BAEHR	St. Louis, Mo.	"	"	1910
HENRY L. DOHERTY	New York, N. Y.	"	"	1910
W. CULLEN MORRIS	New York, N. Y.	"	"	1910
ALANSON P. LATHROP	New York, N. Y.	"	"	1910

J. H. EUSTACE.....Chicago, Ill.
Affiliation Representative Illinois Association.

S. J. GLASS.....Milwaukee, Wis.
Affiliation Representative Wisconsin Association.

JANSEN HAINES.....Des Moines, Iowa
Affiliation Representative Iowa Association.

PAST PRESIDENTS

B. W. PERKINS.....1906
WALTON CLARK.....1906-1907
ALEX. C. HUMPHREYS.....1907-1908

PAST SECRETARY

JAMES W. DUNBAR.....1906-1908

LIST OF PROCEEDINGS.

(*The authors only are responsible for their respective articles.*)

CONTENTS.

	PAGE
Third Annual Meeting—Roll Call	1
Report on Election of New Members	17
Report of the Board of Directors	18
Discussion of Recommendations	52
Constitution—Vote upon Changes in	59
President's Address	63
Report of Nominating Committee	77
Election of Officers and Directors	78
Report of Trustees Gas Educational Fund	79
Resolutions on Death of Sir George Livesey	88
Report on Beal Medal, 1905 and 1907	89
Report on Beal Medal, 1906	107
Report of Public Relations Committee	90
Report of Technical Committee	90
Report of Committee on Uniform Accounts	92
Report of Progress on Dipping Meters	97
Discussion on Dipping Meters	99
Description of Photometrical Exhibit	106
High Pressure Gas Distribution, J. D. von Maur	109
Discussion of High Pressure Distribution	169
Committee on Place of Next Meeting	188
Public Relations and Technical Committee	188
Report on Wrinkles, M. R. Bump	190
Theory of Benzol Enrichment, E. H. Earnshaw	247
Discussions of Benzol Enrichment	254
Modern Wrought Gas Pipe, F. N. Speller	262
Discussion of Wrought Gas Pipe	274
Report of Committee on Standard Gas Threads	277
Report of Committee on Pipe Standards	282
Report of Committee on Electrolysis	283
Report of Committee on Place of Next Meeting	284
Report of Committee on Calorimetry	285
Report of Committee on Definition of Heating Value	383
Report of Committee on Chicago Exhibition	384
Further Remarks on Photometry of Gas, C. O. Bond	385
Report of Committee on Unit of Light	403

PAGE

Better Gas Illumination, T. J. Litle, Jr..... 425
Discussion, Photometry of Gas, Unit of Light and Better Gas Illumination 437
Address by Dr. E. P. Hyde on Unit of Light..... 449
Information about shipping Pentane, P. Thompson..... 450
Statement about Cove Lighting, Dr. Humphreys..... 452
Report of Bureau of Information..... 460
Report Board of Revision of Question Box..... 548
Committee on Unit of Light, Appointment of..... 549
Vertical Retorts, J. H. Taussig..... 549
Physical Theory of Coal Carbonization, W. H. Fulweiler..... 578
Discussion of Vertical Retorts and Physical Theory of Coal Carbonization 650
Holder Cup and Tank Heating, C. J. Ramsburg..... 667
Committee on Beal Medal, Appointment of..... 683
Accidents 684
Resolutions of Thanks 689
Adjournment 691

APPENDIX.

In Memoriam 695
Description of Exhibit 698
Tentative System of Accounts, New York State Public Service Commission 700
Report of Progress, Committee on Pipe Standards..... 760
Questions and Answers, Practical Class..... 766
Revision of Question Box..... 957

INDEX TO
REPORT OF BOARD OF DIRECTORS.

PAGE

Occurrences of the Past Year.

- Meetings 19
- New York Headquarters 19
- Statements of Account 19
- Sales of Proceedings, etc..... 19
- Badges 20
- Amendments to By-Laws..... 20
- Abstracts 22
- Affiliation 22
- Exhibition 24
- International Committee Standard Threads..... 24
- Bureau of Information 25
- Question Box 25
- Beal Medal 25
- Change of Place of Meeting..... 26
- Next Place of Meeting..... 27
- Committee on Arrangements 27
- Sectional Work 27
- International Photometric Commission 27
- Public Relations Committee 27
- General Committees 28
- Papers and Reports Approved 28

Reports.

- Membership Report 30
- Members Deceased 31
- Resignations Accepted 31
- Names of Members Elected April 18th..... 33
- Names of Members Elected September 15th..... 35
- Report of Treasurer 42
- Report of Assistant Treasurer..... 43
- Estimate of Receipts and Expenses..... 45
- Report on Abstracts 46
- Badge Report 47
- Report on Proceedings 48
- Report on Miscellaneous Sales 49

Recommendations.

- Special Reports of Sub-Committees..... 50
- Trustees Gas Educational Fund 50
- Appliance and Apparatus Exhibition 50
- Definition of Heating Value 51
- Conservation League of America 51
- Proposed Amendments to Constitution 51

LIST OF SUBJECTS DISCUSSED.

WITH NAMES OF SPEAKERS.

SUBJECT	SPEAKER	PAGE
Election of New Members	The President	17
Report of Board of Directors	The President	52
	Donald McDonald	53
	R. M. Searle	53
	Carl H. Graf	55
	Walton Clark	55
	F. N. Morton	55
	Donald McDonald	55
	Rollin Norris	56
	H. Russell	56
	J. M. Morehead	57
	H. L. Doherty	58
	Paul Doty	58
	S. P. Cobb	58
President's Address	Alex. C. Humphreys	63
Report of Nominating Committee	The President	77
President-elect, Acknowledgment of Election by	C. F. Prichard	78
Vice Presidents-elect, Acknowledgment of Election by	W. H. Gartley	79
	Donald McDonald	79
Report Trustees Educational Fund	A. E. Forstall	80
Resolutions on Death of George Livesey	A. G. Glasgow	88
	Walton Clark	88
	C. H. Nettleton	89
Report on Beal Medal	Rollin Norris	89
	C. F. Prichard	89
	G. G. Ramsdell	107
	The President	108
Report Public Relations Committee	E. G. Cowdery	90
Report Technical Committee	W. H. Gartley	90
Report Committee on Uniform Accounts	C. F. Prichard	93
Appointment Committee on President's Address	Donald McDonald	93

SUBJECT	SPEAKER	PAGE
Report of Progress on Dipping Meters	W. A. Castor	97
	R. B. Brown	99
	W. H. Gartley	100
	T. D. Miller	100
	R. B. Brown	100
	G. Beadenkopf	105
Technical Exhibit	The President	105
	P. S. Millar	106
	W. H. Gartley	107
High Pressure Gas Distribution	J. D. von Maur	109
	W. A. Baehr	169
	J. D. Shattuck	176
	Rollin Norris	176
	H. L. Rice	177
	E. G. Cowdery	180
	A. S. Miller	180
	E. H. Earnshaw	180
	F. H. Shelton	182
	Walton Forstall	184
	J. D. von Maur	186
Appointment of Committees	The President	188
	H. L. Doherty	188
	Walton Clark	189
Wrinkles	M. R. Bump	190
Theory of Benzol Enrichment	E. H. Earnshaw	247
	F. B. Wheeler	254
	C. F. Prichard	258
	J. D. Shattuck	258
	A. E. Forstall	260
	J. Carscot	261
	J. H. Taussig	261
	E. H. Earnshaw	261
Modern Wrought Gas Pipe	F. N. Speller	262
	F. W. Stone	274
	A. S. Miller	274
	Donald McDonald	274
	F. N. Speller	275
Report Committee President's Address	A. G. Glasgow	277
Report Committee on Standardization of Pipe Threads	A. G. Glasgow	277
	R. O. Luqueer	280
Report Committee on Pipe Standards	A. S. Miller	282
	R. O. Luqueer	283

SUBJECT	SPEAKER	PAGE
Report Committee on Electrolysis	A. G. Glasgow	283
	R. O. Luqueer	283
	The President	283
Report Committee on Place of Next Meeting	J. T. Lynn	284
Report Committee on Calorimetry	R. B. Brown	285
	J. B. Klumpp	376
	R. B. Brown	378
	J. B. Klumpp	378
	C. F. Burgess	379
	J. E. Nute	380
	G. H. Waring	380
	C. O. Bond	380
	J. P. Kennedy	381
	R. B. Brown	381
	C. W. Hinman	383
	The President	383
Report Committee on Definition of Heating Value	Walton Clark	383
Report Committee on Chicago Exhibition	H. L. Rice	384
Further Remarks on Photometry of Gas	C. O. Bond	385
Report Committee on Unit of Light	W. H. Gartley	403
	A. E. Forstall	423
	The President	423
Better Gas Illumination	T. J. Litle, Jr.	425
Discussion of Photometry of Gas, Unit of Light and Better Gas Illumination	E. L. Elliott	437
	C. W. Hare	440
	C. M. Cohn	443
	A. E. Forstall	443
	Irvin Butterworth	444
	V. F. Dewey	445
	R. B. Brown	446
	A. S. Miller	446
	R. M. Searle	447
	W. H. Gartley	448
	Dr. E. P. Hyde	449
	Paul Thompson	450
	Geo. Barrows	451
	H. T. Owens	451
	The President	452
	C. O. Bond	454
	T. J. Litle, Jr.	457

SUBJECT	SPEAKER	PAGE
Report Bureau Information	W. A. Baehr	460
	The President	548
Report Board of Revision of the Question Box	J. D. Shattuck	548
	F. W. Stone	549
	The President	549
Appointment of Committee on International Standard of Light	The President	549
Vertical Retorts	J. H. Taussig	549
Physical Theory of Coal Carbonization	W. H. Fulweiler	578
Discussion of Vertical Retorts and Physical Theory of Coal Carbonization	V. F. Dewey	650
	A. E. Forstall	652
	A. Court	655
	R. B. Brown	655
	Rollin Norris	657
	H. L. Doherty	657
	F. Mayer	659
	J. H. Taussig	664
	W. H. Fulweiler	665
Holder Cup and Tank Heating	C. J. Ramsburg	667
Appointment Committee on Beal Medal	The President	683
Accidents	D. F. Burritt	684
	W. H. Gartley	685
	W. E. McKay	686
Closing Remarks and Resolutions of Thanks	The President	688
	Donald McDonald	690
	W. R. Addicks	691

INDEX TO ANSWERS SENT OUT TO THE PRACTICAL CLASS

PAGE

Back Pressure, How to Locate 827

Balloon, Conditions Under Which It Will Rise and Problem as to Weight It Will Lift 778

Bench, Description of Direct Fire, and Operation of Furnace 946

Boilers:

- Factors in Construction Affecting Efficiency of 924
- Proper Area of Grate Surface of Horizontal Tubular .. 835

Burners, Difference in Manner of Production of Light between Incandescent and Luminous Flame, and Reason Why Incandescent Gives More Light per Cubic Foot of Gas .. 784

Bushel and Gallon, Definitions of 849

By-Products, Uses of 885

Candle Power, Meaning of, and Regulations for Standard Candles 886

Candles, Standard, How to Obtain Proper Results from Use of 850

Carbon, Causes of Deposition of, in Retorts 806

Carburetted Water Gas, Two Types of Apparatus for Making 883

Carburetted Water Gas Set:

- Arrangement of Valves for Reversal of Steam in Generator of 847
- Description of Oil Nozzles for 902

Cement, Composition of, and Tests for Portland 890

Centre Valve, Description of Different Forms of Dry 771

Coal and Coke, Best Size for Use in Generator 898

Coal, Spontaneous Ignition of 804

Combustion, Spontaneous, Definition of, and Where Most Apt to Occur in Coal Gas Works 881

Condensation, Results Sought and Precautions to be Observed in 775

Condensers, Area of Radiating Surface Required in 925

Exhauster, Description of Automatic By-Pass Valve for 774

Explosion, Reason Why Ignition of Mixture of Gas and Air Produces an 932

Flame Temperature, Calculation of Maximum, of an Illuminating Gas from Its Composition 927

Flow of Gas:

- Effect of Sharp Turns in Pipe upon 838
- Sizes of Pipe Required for Given Rates (*Problem*) 798

PAGE

Furnaces:
Difference Between Direct Fire, Generator and Recuperative 882
Principles and Reasons for Economy of Generator.... 900
Gallon, Definition of (*see Bushel*) 849
Gas Engines, Arguments in Favor of Use of..... 841
Governor:
Description of Automatic Street Main..... 860
Description of Non-Automatic Street Main..... 818
Heating Power, Of Illuminating Gas Calculated from Its Composition 777
Holders, Descriptions of Single-Life and Telescopic..... 906
Hydraulic Main, Water Seal in..... 805
Impurities, Removed by Chemical Action..... 807
Joints:
Description of Making Cement..... 854
Respective Advantages of Various, for Cast Iron Pipe 814
"Large Bill," Complaint, How Handled..... 872
Leakage:
Search for, and Reduction of, in Distribution System.. 934
Unaccounted-for Gas Not All Actually Lost by..... 870
Lime, Characteristics of Good, and Preparation of Mortar for Use for Brickwork 877
Mains:
How to Determine Whether System Is Able to Satisfactorily Supply Territory 825
Methods of Testing for Tightness before Covering New 779
Masonry, Definitions of Ashlar and Rubble in..... 875
Meter, Complaint, Description and Use..... 838
Meter Connections, Proper Sizes and Weights of Lead..... 782
Meters:
Description of Connections from Service and Riser to Consumers' 939
Description of Dry 867
How Often to Test Consumers'..... 783
Method of Determining Size to Be Set in Any Given Case 857
Naphthalene, Methods of Preventing Deposition of, in Mains and Services 800
Oil, Comparison between Beaumont and Pennsylvania Crude 918
Oil Gas, Methods of Manufacturing 768
Oil Tanks, Protection of 818
Oxide, Substances that Give Value to Spent..... 837
Photometer, Description of Bar 810

PAGE

Pressure:
Regulation of, as Affecting Leakage 916
On Street Mains, Importance of Regulating 954
Purification:
Reactions Occurring in, with Lime and with Oxide ... 865
Theoretical Efficiency (*per pound*) of Lime and, of Oxide 849
Theoretical Efficiency (*per bushel*) of Lime for Removal of CO_2 and H_2S (*Problem*) 933
Revivification of Oxide, Description of Method of, without Removing from Boxes 837
Scrubbers, Water Distributing Devices for Tower 787
Scrubbing, Object of Process of 821
Scurfing, Why Important and How Done 845
Seal, Purpose of 805
Services:
Description of Connection of 1 in. to 3 in. Mains 780
How to Connect Existing, to New Mains 824
Slate, Method of Fastening, to Purlins of Iron Roofs for Retort Houses 830
Specific Heat, Definition of 823
Specific Heats, Of Various Gases 864
Standards of Light, Description of Various Secondary 909
Station Meter, Description of Drum of 920
Steam Engines:
Calculation of Horse Power of 791
Description of Single Cylinder 831
Running Exhaust Pipe for 796
Tar:
Methods of Removing from Hot Gas 952
Value of, for Heating Retort Benches as Compared with Coke 796
Wagon, Number of Bushels of Coke Held by (*Problem*) 908
Water Heater:
Description of Connection with Boiler of a Circulating 942
Quantity of Water Heated by (*Problem*) 840
Weights, Statement of, for Various Gases 886

INDEX TO WRINKLE DEPARTMENT.

PAGE

Method of Constructing Brick Tanks.
By Donald McDonald, of Louisville 190
Automatic Overflow from Washbox.
By The United Gas Improvement Co..... 191
Drip for High Pressure Main.
By C. B. Strohn..... 193
Scrubber Sprays.
By M. N. Latta 194
Steam Nozzle, Water Gas Generator.
By M. N. Latta 197
Automatic Alarm on Works' Pressure Gauge.
By L. B. Moorhouse 198
Method of Threading Pipe.
By Geo. Beadenkopf..... 200
Method of Keeping Meter Shop Record.
By W. J. Dorr 201
To Prevent Exhauster Blades Sticking.
By F. C. Millard 203
Record Indicator for Purifier Boxes.
By F. C. Millard 203
Method for Testing Lime.
By F. E. Parks 204
Gauge Station Box.
By F. L. Cross 206
Automatic Control of Steam Siphon.
By G. I. Keal 206
Revivification of Purifying Material.
By V. F. Dewey 206
Recording Pressure Gauge.
By G. I. Keal 209
Method of Removing Naphthalene.
By F. L. Cross 209
Gauge Apparatus for Testing Drips.
By F. L. Cross 211
Meter Dial Chamber Test.
By F. L. Cross 211
Canvas Meter Sling.
By F. L. Cross 213
Dust Proof Gas Light.
By V. F. Dewey 214

PAGE

Increasing Water Seals on Purifiers.
By V. F. Dewey 217
Emptying Purifiers with Wheelbarrows.
By O. A. Sinsel 217
Manifold for Rigid Meter Connections.
By F. L. Cross 217
Converting a Holder into a Purifier.
By V. F. Dewey 222
Distance Street Pressure Regulations.
By V. F. Dewey 222
Hot Coke Car.
By Frank Huber 224
Spray for Dampening Iron Sponge.
By Frank Huber 226
Superheater for Decarbonizing.
By Frank Huber 226
Method of Handling Ammoniacal Liquor.
By R. G. Griswold 230
Curves for the Flow of Gas.
By R. G. Griswold 230
A Special Tee.
By R. G. Griswold 232
Proving Head Gauges.
By The United Gas Improvement Co..... 232
Credit Dial Gauges.
By The United Gas Improvement Co. 233
Dehydration of Blast Air.
By M. N. Latta 234
Repairing Cement Joints on High Pressure.
By J. D. von Maur 237
Piping Compressed Air to Benches.
By A. T. Stout 239
By-Pass for Gas Arcs.
By V. K. Gould 239
Pintsch Compressor Connection.
By D. MacArthur 239
Gas Burners for Drying Moulds.
By G. W. Thomson 241
Burner for Drying Barrels.
By G. W. Thomson 243
Benzol Enrichment Apparatus.
By J. D. Shattuck 244

INDEX TO
REVISION OF QUESTION BOX.

PAGE

Gas Coals.
- Kinds 957
- Sources 958
- Examination 963
- Storage 966
- Handling 968

Carbonizing.
- The Direct and the Producer Bench..... 969
- The Recuperative Producer Bench..... 971
- Benches for Coal and Coke Fuel..... 975
- The Life of a Bench..... 976
- Theory of the Furnace..... 977
- Clinkering 982
- The Charge 985
- Bench Regulation 991
- Practical Fuel Economy 992
- Patching Retorts 994
- Scurfing 995
- Heating Up and Letting Down..... 997
- Minor Stack Design and Construction..... 1004
- Charging and Drawing Machinery..... 1005

Calculations of Gas and Air Volumes in Furnace Combustion.
(*By Professor Richards, of Lehigh University.*)
- Volume of Gas per Ton of Coke..... 1007
- Pounds of Steam per Ton of Coke..... 1008
- Volume of Air Required per Ton of Coke..... 1009
- Mixed Air and Steam Required..... 1011
- Volume of Air Actually Used..... 1011
- Combustion of Producer Gas..... 1012
- Volume of Chimney Gas..... 1013
- Actual Volumes of Flue Gas..... 1014
- Combustion of Illuminating Gas..... 1014

Condensation 1015
- Theory of Condensation 1018
- Condensation of Water Gas 1020
- Removal of Tar 1021
- Condensation of Coal Gas 1022
- Position of Tar Extractor 1023

PAGE

Condensation.—*Continued.*
Removal of Ammonia 1025
Removal of Naphthalene 1029
Removal of Cyanogen 1031
Purification.
Various Principles Utilized 1032
Chemistry of Purification 1034
Iron Oxide Purification 1037
Manufacture of Iron Oxide 1038
Substitutes for Shavings..... 1040
Operation of Boxes and Handling Oxide..... 1042
Revivification in Situ 1047
Proper Number of Boxes 1048
Sulphur Permissible 1049
Removal of Bisulphide of Carbon 1051
Cost of Purification 1054
Purifying Houses 1055

Alex. C. Humphreys

REPORT OF THE PROCEEDINGS

OF THE

AMERICAN GAS INSTITUTE

THIRD ANNUAL MEETING

HELD AT

UNITED ENGINEERING SOCIETIES BUILDING
NEW YORK

OCTOBER 21ST, 22D AND 23D, 1908

FIRST DAY—MORNING SESSION.

The Third Annual Meeting of the American Gas Institute, held in the United Engineering Societies Building, New York City, was called to order at 10 A. M., by the President, Dr. Alexander C. Humphreys.

The following gentlemen were present:

Active Members.

Addicks, W. R.....New York, N. Y.
Africa, Walter G.....Manchester, N. H.
Allen, W. H.....Camden, N. J.
Allison, Walter A.....Philadelphia, Pa.
Anderson, William C.....Plymouth, Pa.
Arthur, F. M.....Philadelphia, Pa.
Atwood, C. Cassels .....Long Isl. City, N. Y.
Baehr, William Alfred.....St. Louis, Mo.
Bains, George B., 3d.....Ardmore, Pa.
Barnes, Albert Mallard .....Cambridge, Mass.
Barnitz, F. R.....New York, N. Y.
Barrett, William E.....New York, N. Y.
Barrett, Wm. F.....Chicago, Ill.
Barrows, George S.....Kansas City, Kans.

Barthold, W. H. ..... Saginaw, Mich.
Battin, Henry S. ..... Philadelphia, Pa.
Beadenkopf, George ..... Baltimore, Md.
Beadle, Albert B. ..... New York, N. Y.
Beal, A. R. ..... Newburgh, N. Y.
Beal, T. R. ..... Poughkeepsie, N. Y.
Beal, Wm. R. ..... Newburgh, N. Y.
Beardslee, Charles S. ..... Cleveland, Ohio.
Bell, Ernest William ..... New York, N. Y.
Benedict, Clarence M. ..... Philadelphia, Pa.
Bennett, Chas. W. ..... Binghamton, N. Y.
Bigelow, Arthur F. ..... Allentown, Pa.
Bill, Benjamin P. ..... Springfield, Mass.
Bissell, West ..... Jersey City, N. J.
Bond, Charles O. ..... Philadelphia, Pa.
Boone, Charles ..... Astoria, L. I., N. Y.
Bradley, Charles W. ..... Oak Park, Ill.
Bradley, Fred L. ..... New York, N. Y.
Bradley, William H. ..... New York, N. Y.
Brown, Ernest C. ..... New York, N. Y.
Brown, R. B. ..... Milwaukee, Wis.
Brown, Robert E. ..... Mankato, Minn.
Brown, W. O. ..... East Orange, N. J.
Bruce, Howard ..... Baltimore, Md.
Brundage, Henry M. ..... New York, N. Y.
Bryant, Chas. F. ..... New York, N. Y.
Buck, H. M. ..... Waukesha, Wis.
Buckminster, Rollin ..... Lowell, Mass.
Bump, Milan R. ..... New York, N. Y.
Burgess, C. F. ..... Madison, Wis.
Bunker, Theodore ..... Paterson, N. J.
Burleigh, John J. ..... Camden, N. J.
Burritt, Dwight F. ..... Springfield, Mass.
Bush, Robert Wilder ..... Brooklyn, N. Y.
Butler, Matthew W. ..... Philadelphia, Pa.
Butterworth, C. W. ..... Milton, Pa.
Butterworth, Irvin ..... Detroit, Mich.
Callender, Elbert P. ..... New York, N. Y.
Campbell, Alex. J. ..... New London, Conn.

Campbell, S. K.....Hempstead, N. Y.
Carpenter, Harold Eugene.....New York, N. Y.
Carter, Robert A.....New York, N. Y.
Castor, William A.....Philadelphia, Pa.
Cathels, Edmund .....Providence, R. I.
Causebrook, W. R.....Plainfield, N. J.
Chadwell, Wm. H.....Newark, N. J.
Chamberlain, Glenn R.....Grand Rapids, Mich.
Chewning, Walter L.....Newark, N. J.
Child, Ralph S.....Grand Rapids, Mich.
Chubb, Chester N.....Sioux Falls, Mich.
Clabaugh, G. W.....Omaha, Neb.
Clapp, G. N.....Middletown, Ohio.
Clark, John A., Jr.....East Orange, N. J.
Clark, John C. D.....Chicago, Ill.
Clark, William J.....Mt. Vernon, N. Y.
Clark, Walton .....Philadelphia, Pa.
Clarke, Alfred.....Boston, Mass.
Clary, Edw. D.....Burlington, Iowa.
Clements, W. B.....Ossining, N. Y.
Cobb, S. P.....Rochester, N. Y.
Coffin, John A.....Gloucester, Mass.
Cohn, Charles M.....Baltimore, Md.
Cole, George M.....Plattsburgh, N. Y.
Cole, William W.....Philadelphia, Pa.
Collins, Carroll .....Marshall, Mich.
Collins, David J.....Philadelphia, Pa.
Collins, Henry P.....Little Falls, N. Y.
Combs, Roger B.....Philadelphia, Pa.
Congdon, Richard C.....Atlanta, Ga.
Cooper, W. H.....Amsterdam, N. Y.
Corscot, John .....Madison, Wis.
Cortis, Dwight T.....Boston, Mass.
Cowdery, Edward G.....Chicago, Ill.
Crafts, Harry C.....Pittsfield, Mass.
Cressler, A. D.....Fort Wayne, Ind.
Cresson, B. F.....Easton, Pa.
Crisfield, J. A. P.....Philadelphia, Pa.
Cross, Philip.....New York, N. Y.

Cunningham, John H.....Westminster, Md.
Curran, G. W.....Philadelphia, Pa.
Curtis, Samuel P.....Philadelphia, Pa.
Davidson, Rolland A.....New York, N. Y.
Davies, H. W.....Philadelphia, Pa.
Day, C. L.....Chicago, Ill.
Dell, John .....St. Louis, Mo.
DeLong, James C.....Syracuse, N. Y.
Denison, Harry.....Paterson, N. J.
Dewey, V. F.....Detroit, Mich.
Dickel, Carl A.....Philadelphia, Pa.
Dickey, Charles H.....Baltimore, Md.
Dixon, J. Alfred .....New York, N. Y.
Dobbin, G. B. .....New York, N. Y.
Doherty, H. L.....New York, N. Y.
Donahue, E. J.....Jersey City, N. J.
Dorner, William F.....Philadelphia, Pa.
Doty, Paul.....St. Paul, Minn.
Downey, James N.....Camden, N. J.
Dunbar, James W.....New Albany, Ind.
Durbin, C. K.....Denver, Colo.
Dutton, Lewis R.....Wyncote, Pa.
Dutton, R. H.....Hanover, Pa.
Earnshaw, Edward H.....Newark, N. J.
Easton, Frederick W.....Pawtucket, R. I.
Eaton, Alfred B.....Chicago, Ill.
Eaton, James B.....Rochester, N. Y.
Eaton, William M.....New York, N. Y.
Egner, Frederick .....Norfolk, Va.
Einstein, A. C.....St. Louis, Mo.
Elliott, Arthur H.....New York, N. Y.
Ellis, Harry .....Camden, N. J.
Ellis, John W.....Providence, R. I.
Engel, Francis .....Elizabeth, N. J.
Enright, J. H.....Frederick, Md.
Eustace, E. W.....Peoria, Ill.
Eustace, J. H.....Chicago, Ill.
Ferguson, B. B.....Portsmouth, Va.
Ferrier, James .....Rome, Ga.

Ferris, H. H.....Jersey City, N. J.
Fisher, David G.....Brooklyn, N. Y.
Fitzgerald, Leonard .....Gary, Ind.
Flook, Wm. M.....New York, N. Y.
Fogg, Oscar H.....New York, N. Y.
Forbes, Charles .....Ottawa, Ont., Can.
Forstall, Alfred E.....New York, N. Y.
Fox, Clifford S.....Long Isl. City, N. Y.
Frueauff, Frank W.....New York, N. Y.
Fullagar, Wm. B.....Canon City, Col.
Fullerton, George .....Schenectady, N. Y.
Fulweiler, Walter Herbert .....Philadelphia, Pa.
Funkhouser, E. M.....Roanoke, Va.
Ganser, Herbert H.....Norristown, Pa.
Gartley, W. H.....Philadelphia, Pa.
Gavit, E. P.....Albany, N. Y.
George, Thomas L.....Philadelphia, Pa.
Gillette, F. A.....Waverly, N. Y.
Gillingham, Hubert D.....Wilkes-Barre, Pa.
Glasgow, Arthur Graham .....London, S. W., Eng.
Glass, Sheldon J.....Milwaukee, Wis.
Gould, John A.....Boston, Mass.
Gould, Vernon K.....Bangor, Me.
Graf, Carl H.....Indianapolis, Ind.
Graham, Malcolm M.....New York, N. Y.
Greacen, Wm., Jr.....Hoboken, N. J.
Grey, John Chester .....Des Moines, Iowa.
Gribbel, John .....Philadelphia, Pa.
Guffey, Joseph F.....Pittsburg, Pa.
Guldlin, Olaf N.....Fort Wayne, Ind.
Haines, Jansen .....Des Moines, Iowa.
Hall, A. H.....New York, N. Y.
Hanlon, J. P.....Jersey City, N. J.
Hardick, Chas. F.....Philadelphia, Pa.
Hare, C. Willing .....Philadelphia, Pa.
Harriman, Horace M.....Hartford, Conn.
Harrington, A. S.....Chicago, Ill.
Harrington, Walter K.....New York, N. Y.
Hart, William F.....Washington, D. C.

Hastings, Frank S.....New York, N. Y.
Hawthorn, Wm. James .....New York, N. Y.
Hellen, Frank .....Rochester, N. Y.
Helme, William E.....Philadelphia, Pa.
Hemminger, George Reverdy .....Philadelphia, Pa.
Hessenbruch, George S.....New York, N. Y.
Hoffman, Howard .....Syracuse, N. Y.
Hofmann, Lothar .....Fort Wayne, Ind.
Holden, Thomas F.....Washington, D. C.
Holman, C. L.....St. Louis, Mo.
Holmes, Herbert M.....Stapleton, N. Y.
Holzer, Edwin G.....Easton, Pa.
Horning, George R.....Philadelphia, Pa.
Horton, Thomas O.....Stapleton, N. Y.
Howard, J. B.....Galena, Ill.
Hoyt, William G.....New York, N. Y.
Humphreys, Alexander C.....New York, N. Y.
Humphreys, J. J.....Coney Island, N. Y.
Hunt, H. R.....Chicago, Ill.
Hyde, Henry H.....Racine, Wis.
Jelliffe, C. N.....New York, N. Y.
Jenks, R. J.....Evanstown, Ill.
Johnston, Mervyn E.....New York, N. Y.
Jones, Paul R.....New York, N. Y.
Jones, Thomas Clive.....Delaware, Ohio.
Jourdan, Edward R.....New York, N. Y.
Jourdan, James H.....Brooklyn, N. Y.
Kane, Joseph P.....Port Chester, N. Y.
Keegan, Charles F.....New York, N. Y.
Keene, Alfred M.....Mt. Vernon, N. Y.
Keller, C. M.....Columbus, Ind.
Kellogg, R. M.....Mt. Vernon, N. Y.
Kennedy, James .....West Hoboken, N. J.
Kennedy, James S.....New York, N. Y.
Kennedy, John Pendleton .....Cambridge, Mass.
Keppelman, John H.....Reading, Pa.
Kilgour, J. F.....Passaic, N. J.
Kircher, Harry B.....Belleville, Ill.
Klumpp, John Bartleman .....Philadelphia, Pa.

Knapp, Amos M.....Peekskill, N. Y.
Knight, J. J.....Kalamazoo, Mich.
Kraft, R. P.....Milwaukee, Wis.
Laird, Frank J.....Pittsburg, Pa.
Lamson, Charles Dudley.....Worcester, Mass.
Lamson, William O., Jr.....West Chester, Pa.
Lane, Frank K.....Anderson, Ind.
Lane, R. M.....Brooklyn, N. Y.
Laraway, B. R.....Jackson, Mich.
Lathrop, Alanson P.....New York, N. Y.
Lawlor, R. H.....Waterloo, Iowa.
Lawrence, W. F.....Astoria, N. Y.
Learned, Charles A.....Meriden, Conn.
Learned, Waldo A.....Newton, Mass.
Leland, G. B.....Stamford, Conn.
Leonard, Charles F.....Fall River, Mass.
Levering, Wm. W.....Philadelphia, Pa.
Lewis, William Morgan.....Rockville, Conn.
Linton, Samuel E.....Vicksburg, Miss.
Littlehales, Thomas .....Camden, N. J.
Loichot, Joseph L.....Canton, Ohio.
Luqueer, Robert O.....New York, N. Y.
Luther, F. E.....Chicago, Ill.
Lynn, James T.....Detroit, Mich.
Lyons, B. F.....Beloit, Wis.
McCarter, Thomas N.....Newark, N. J.
McDonald, Donald .....Louisville, Ky.
McDonald, Donald .....Albany, N. Y.
McDonald, William .....Albany, N. Y.
McDowell, J. C.....Pittsburg, Pa.
McGregor, William .....Pawtucket, R. I.
McIlhenny, James S.....Washington, D. C.
McIlhenny, John .....Philadelphia, Pa.
McIlhenny, John D.....Philadelphia, Pa.
McKay, W. E.....Boston, Mass.
McKenzie, W. H.....Kansas City, Kans.
McLaughlin, R. A.....Galesburg, Ill.
McLean, George .....Dubuque, Iowa.
McLean, H. B.....New York, N. Y.

Macbeth, A. B.....Kansas City, Mo.
Macbeth, George Trenholm .....Mt. Vernon, N. Y.
Macdonald, B. J. .....Newburgh, N. Y.
Malone, M. E.....Denver, Col.
Maloney, Andrew P.....Philadelphia, Pa.
Manier, Robert W.....Binghamton, N. Y.
Mann, Howard E..... .....Washington, D. C.
Mansur, John H.....Royersford, Pa.
Marks, R. J.....Norfolk, Va.
Martin, Edmund H..... .....Omaha, Neb.
Maxon, J. H.....Bessemer, Ala.
Mayers, J. Alex.....New York, N. Y.
Melick, Thomas ....Plainfield, N. J.
Merritt, Albert H.....Niagara Falls, N. Y.
Merritt, W. H..... .....Lebanon, Pa.
Middleton, Robert L.....Washington, D. C.
Miller, Alten S.....Baltimore, Md.
Miller, V. A.....Canandaigua, N. Y.
Miller, Thomas D..... .....New Orleans, La.
Miller, William B.....Birmingham, Ala.
Milsted, William N..... .....New York, N. Y.
Moore, Edwin A.....Camden, N. J.
Moorhouse, L. B. .....San Antonio, Tex.
Morehead, John M.....Chicago, Ill.
Morrell, Edward E..... ....Chicago, Ill.
Morris, W. Cullen .....New York, N. Y.
Morris, William T.....Ithaca, N. Y.
Morrison, Henry K.....Concord, N. H.
Morse, Chas. W.....Haverhill, Mass.
Morton, F. N.....Philadelphia, Pa.
Moses, Frank D.....Trenton, N. J.
Musil, Louis F.....New York, N. Y.
Myers, Joseph B.....Philadelphia, Pa.
Nettleton, Charles H.....Derby, Conn.
Norcross, J. Arnold.....New Haven, Conn.
Norris, Rollin .....Philadelphia, Pa.
Norton, Walter F.....Nashua, N. H.
Nute, Joseph E.....Fall River, Mass.
O'Malley, B.....Aurora, Ill.

Old, George ..... St. Augustine, Fla.
Palmer, H. C..... Buffalo, N. Y.
Parker, Frank H..... Burlington, Vt.
Parker, Joseph Smith..... Philadelphia, Pa.
Pearson, W. H..... Toronto, Ont., Can.
Perkins, B. W..... Altoona, Pa.
Perkins, Jay Hugh ..... Wilkes-Barre, Pa.
Persons, Fred R..... Toledo, Ohio.
Pettes, W. H..... Newark, N. J.
Phifer, Walter James ..... Coatesville, Pa.
Polk, Roger W..... St. Louis, Mo.
Pond, E. C..... Petersburg, Va.
Postley, Arthur ..... New York, N. Y.
Pratt, Edward G..... Chicago, Ill.
Prichard, Charles F. ..... Lynn, Mass.
Quinn, A. K..... Newport, R. I.
Ramsdell, George G..... New York, N. Y.
Randolph, William W..... New York, N. Y.
Reitemeyer, A. F..... Perth Amboy, N. J.
Rice, Henry L..... Aurora, Ill.
Richardson, Frank S..... North Adams, Mass.
Riselay, William S..... Buffalo, N. Y.
Ritter, Charles S..... Detroit, Mich.
Roberts, F. M..... Mt. Vernon, N. Y.
Roberts, George J..... Newark, N. J.
Robison, Chas. D..... New York, N. Y.
Rogers, W. H..... Paterson, N. J.
Roohan, Patrick F..... Saratoga Springs,N.Y.
Roper, George D..... Rockford, Ill.
Rosenquest, Eugene H..... Westchester, N. Y.
Ross, Harry C..... Baltimore, Md.
Rossman, G. M..... Keene, N. H.
Rowland, William L..... Philadelphia, Pa.
Russell, Daniel R..... St. Louis, Mo.
Russell, Herman ..... Rochester, N. Y.
Rutter, Thomas V..... New York, N. Y.
Sargent, Fred. H..... Lawrence, Mass.
Sawyer, F. H..... Norfolk, Va.
Schaddelee, Richard ..... Grand Rapids, Mich.

Schenck, Rudolph ..... Chicago, Ill.
Schmidt, F. W..... Jersey City, N. J.
Schwarm, C. A..... Detroit, Mich.
Scobell, E. C..... Rochester, N. Y.
Scott, John M..... Kansas City, Mo.
Scott, Rossiter Stockton ..... Baltimore, Md.
Seamon, J. Fred ..... Philadelphia, Pa.
Searle, Robert M..... Rochester, N. Y.
Secord, Warren L..... Ossining, N. Y.
Serrill, William J..... Philadelphia, Pa.
Shattuck, John D..... Chester, Pa.
Shelton, F. H..... Philadelphia, Pa.
Shepard, Frederick C..... Minneapolis, Minn.
Sherwood, M. S..... Summit, N. J.
Shiebler, Marvin ..... Boston, Mass.
Simons, Keating Lewis ..... Birmingham, Ala.
Simpson, Colin C..... New York, N. Y.
Skellenger, Daniel Perry ..... Plainfield, N. J.
Skinner, Samuel ..... Montreal, Can.
Slade, Richmond E..... Hartford, Conn.
Slater, Alpheus B..... New York, N. Y.
Smart, F. R., Jr..... York, Pa.
Smith, A. J..... St. Albans, Vt.
Smith, Elmer W..... Kewanee, Ill.
Smith, Peter N..... Sioux City, Iowa.
Smith, William Henry ..... Philadelphia, Pa.
Snow, William H..... Holyoke, Mass.
Snyder, Charles S..... Philadelphia, Pa.
Spangenberg, Brewster H..... New York, N. Y.
Spear, M. H..... Flushing, N. Y.
Spragle, L. D..... Gloversville, N. Y.
Staniford, Arthur Fowler ..... Brooklyn, N. Y.
Steinwedell, Carl ..... Columbus, Ohio.
Steinwedell, W. E..... Cleveland, Ohio.
Stelling, C. A..... Passaic, N. J.
Stetson, George R..... New Bedford, Mass.
Stewart, Samuel B..... Pittsburg, Pa.
Stirzel, Jacob W..... Philadelphia, Pa.
Stone, F. W..... Ashtabula, Ohio.

Strecker, Alexander H.....Newark, N. J.
Stroud, Morris W.....Philadelphia, Pa.
Summers, T. W.....Ithaca, N. Y.
Talbot, Frank .....Danville, Va.
Taussig, J. Hawley .....Philadelphia, Pa.
Taylor, John Byron .....Watertown, N. Y.
Tenney, Albert Ball .....Malden, Mass.
Terry, H. Warren, Jr.....Mt. Vernon, N. Y.
Thomas, W. F.....New Brunswick, N. J.
Thompson, Paul .....Philadelphia, Pa.
Thomson, George W.....Chester, Pa.
Thwing, Orrell O.....Fort Wayne, Ind.
Tippey, B. O.....Grand Rapids, Mich.
Tippy, C. W.....Williamsport, Pa.
Tobey, F. Jr.....Kingston, N. Y.
Tompkins, John P.....Atlantic City, N. J.
Treleaven, L. G.....Topeka, Kans.
Tucker, C. A.....Rochester, N. Y.
Tutwiler, C. C.....Philadelphia, Pa.
Underhill, Henry L.....New York, N. Y.
Von Maur, Jacob D.....St. Louis, Mo.
Wainwright, Arthur V.....Schenectady, N. Y.
Wakeman, E. A.....Terre Haute, Ind.
Walker, William L.....Fitchburg, Mass.
Walters, B. S.....South Bend, Ind.
Waring, George H.....Omaha, Neb.
Warmington, Daniel R.....Cleveland, Ohio.
Warner, George H.....New York, N. Y.
Waters, John A.....Stamford, Conn.
Weisgerber, Edwin C.....Zanesville, Ohio.
Welsh, Wm. J.....Stapleton, N. Y.
Whipple, Henry S.....Rockford, Ill.
Whitcomb, H. D., Jr.....Newark, N. J.
White, E. C.....New York, N. Y.
Wheeler, Fred B.....Syracuse, N. Y.
Wheeler, H. A.....Bayonne, N. J.
Wilde, Charles .....Chester, Pa.
Wilkinson, A. L.....Detroit, Mich.
Willard, Fred A.....Rochester, N. Y.

Williams, E. H.....Waterbury, Conn.
Williams, George .....New York, N. Y.
Williams, H. G.....Pottstown, Pa.
Williams, Luther S.....Harrisburg, Pa.
Williams, Robert F.....Ardmore, Pa.
Williams, W. L.....Paterson, N. J.
Wilson, G. J.....New York, N. Y.
Witherby, Edwin E.....New York, N. Y.
Witherby, Edwin C.....Syracuse, N. Y.
Wolff, S. E.....New York, N. Y.
Wones, W. R.....Owensboro, Ky.
Wood, Stuart .....Philadelphia, Pa.
Woodall, George Herbert .....Philadelphia, Pa.
Woods, George E.....New York, N. Y.
Wortendyke, I. F.....Janesville, Wis.
Wyant, Robert E.....New Haven, Conn.
Yorke, Eugene H.....Portland, Me.
Young, John T.....Muskegon, Mich.
Young, P. S.....Newark, N. J.
Young, R. R.....Newark, N. J.
Zeek, C. F.....Pensacola, Fla.
Zingg, J. P.....Montclair, N. J.

Associate Members.

Aikin, Hugh Carlon .....Chester, Pa.
Asendorf, Carl .....Chicago, Ill.
Atwater, C. G.....New York, N. Y.
Azoy, Anastasio C. M.....New York, N. Y.
Barbour, W. T.....Detroit, Mich.
Bartlett, John Crawford .....Philadelphia, Pa.
Behringer, Edward A.....New York, N. Y.
Bigelow, Lucius S.....New York, N. Y.
Brill, A. P.....Pittsburg, Pa.
Brown, D. F.....Albany, N. Y.
Callenbach, J. A.....Merchantsville, N. J.
Carpenter, H. A.....Pittsburg, Pa.
Cartwright, Henry R.....Philadelphia, Pa.
Chapin, Edwin S.....New York, N. Y.
Cheesman, Frank P. .....New York, N. Y.

Clifford, Thomas C.....East Pittsburg, Pa.
Corbus, F. G.....Philadelphia, Pa.
Court, August.....St. Louis, Mo.
Crane, William M.....New York, N. Y.
Crawford, G. W.....Philadelphia, Pa.
Cruse, Arthur R.....Ambler, Pa.
Daly, David R.....Jersey City, N. J.
Deane, Edw. M.....Grand Rapids, Mich.
Dean, Mark.....Philadelphia, Pa.
Dickey, Edmund S.....Baltimore, Md.
Ecker, Harrison G.....New York, N. Y.
Eisenman, F. N.....Boston, Mass.
Fisher, Thomas J.....Washington, D. C.
Flavell, Frank.....Ambler, Pa.
Floyd, Frederick W.....New York, N. Y.
Fowler, J. S.....Philadelphia, Pa.
Gaitley, John E.....Albany, N. Y.
Garrison, John J.....Albany, N. Y.
Gassett, A. L.....Cleveland, Ohio.
Gildersleeve, David H.....W.New Brighton,N.Y.
Goodman, Patrick.....New York, N. Y.
Hamlink, L. C.....St. Louis, Mo.
Harper, H. D.....Chicago, Ill.
Harris, George E.....New York, N. Y.
Hayward, Sterling F.....New York, N. Y.
Henry, Wm. G.....Chicago, Ill.
Hinman, Charles W.....Lowell, Mass.
Hobdell, George.....Camden, N. J.
Hoffman, Jules G.....Detroit, Mich.
Johnston, E. D.....Connersville, Ind.
Kahn, Julius.....New York, N. Y.
Kane, William.....Philadelphia, Pa.
Kellum, Benjamin J.....Chicago, Ill.
Lauber, Albert.....New York, N. Y.
Leamey, Alan.....Columbus, Ohio.
Leavenworth, Mark.....Pittsburg, Pa.
Leiman, Edw. C.....New York, N. Y.
Litle, Thomas J., Jr.....Gloucester City, N. J.
Little, Archibald Stevens Begg.....St. Louis, Mo.

Lush, Joseph ..... New York, N. Y.
Lyon, Edward A..... New York, N. Y.
Mason, Sidney ..... Philadelphia, Pa.
Maxwell, Joseph P..... Pittsburg, Pa.
McClellan, John W..... New York, N. Y.
Miller, Fred A. ..... Bradford, Pa.
Morrell, Clarence P..... New York, N. Y.
Mueller, Robert ..... Decatur, Ill.
Nichols, Carroll B..... Philadelphia, Pa.
Norton, Harry A..... Boston, Mass.
Nutty, G. R..... Pittsburg, Pa.
Osborne, Willard B..... Pittsburg, Pa.
Owens, Harry Thurston ..... New York, N. Y.
Pattison, Melvin ..... Cleveland, Ohio.
Pearson, J. A..... Philadelphia, Pa.
Peffly, Irvin W..... New York, N. Y.
Pilz, C..... New York, N. Y.
Piser, Theo. H..... Boston, Mass.
Plantinga, Pierre ..... Cleveland, Ohio.
Potter, Theodore J..... West Roxbury, Mass.
Prendergast, D. J..... New York, N. Y.
Rancke, Luis N..... Baltimore, Md.
Reichelm, Paul F..... New York, N. Y.
Reynolds, M. G..... Anderson, Ind.
Roberts, Clarence Y..... Philadelphia, Pa.
Rodgers, Edward H..... Philadelphia, Pa.
Sayer, Eugene Y..... New York, N. Y.
Schall, Henry D..... Oak Park, Ill.
Schiller, Chas. C..... Chicago, Ill.
Schurz, James R..... Philadelphia, Pa.
Schutt, Henry L..... Buffalo, N. Y.
Seeger, Robert ..... St. Louis, Mo.
Stacey, Andrew J..... Cincinnati, Ohio.
Stacey, James E..... Cincinnati, Ohio.
Stadleman, W. A..... New York, N. Y.
Speller, Frank N..... Pittsburg, Pa.
Sprague, Henry H..... Bridgeport, Conn.
Storrs, Chas. P..... Oswego, N. Y.
Sullivan, William H..... Flushing, N. Y.

Taplin, Frank E.....Cleveland, Ohio.
Terhune, Chas. F.....New York, N. Y.
Thomas, Richard H.....Philadelphia, Pa.
Townsend, Chas. W.....Pittsburg, Pa.
Van Wie, Edwin G.....Detroit, Mich.
Warren, Henry J.....Stamford, Conn.
Weber, Albert J.....New York, N. Y.
Wehner, Robert K.....Newark, N. Y.
Welch, John S.....Philadelphia, Pa.
Wells, Fred K.....New York, N. Y.
Wharton, Henry .....Philadelphia, Pa.
Wickham, Leigh .....St. Louis, Mo.
Wilshire, Frank W.....New York, N. Y.
Wood, Edward R., Jr.....Philadelphia, Pa.
Wood, George B.....Philadelphia, Pa.
Yetter, Louis N.....Chester, Pa.
Young, L. B. .....Detroit, Mich.

Junior Members.

Baxter, Edw. O.....Yonkers, N. Y.
Butler, Joseph F.....New York, N. Y.
Calkins, W. B.....Cincinnati, Ohio.
Carter, Robert A., Jr.....New York, N. Y.
Colquhoun, Edw. M. .....Philadelphia, Pa.
Crowell, James Kenneth.....Mt. Vernon, N. Y.
Dickey, Samuel J.....Philadelphia, Pa.
Dunne, Philip .....New York, N. Y.
Eavenson, W. K.....Philadelphia, Pa.
Ely, Seth Harrison .....Dover, N. J.
Gilpin, Francis Hopkinson .....Philadelphia, Pa.
Green, Albert .....Philadelphia, Pa.
Green, J. W.....Mt. Vernon, N. Y.
Jennings, Robert James .....Mt. Vernon, N. Y.
Mathews, Eugene H.....Morristown, N. J.
Milligan, A. L. .....Chester, Pa.
Muller, Herman, Jr.....Stapleton, N. Y.
Neth, John A.....Tarrytown, N. Y.
Offutt, M. Webb .....Philadelphia, Pa.

Otten, Chas., Jr.....Yonkers, N. Y.
Petura, Frank J.....Denver, Col.
Pratt, Edward G., Jr.....Spokane, Wash.
Sargeant, Frank Washburn .....Rosebank P. O., N. Y.
Vittinghoff, Hans Von .....Yonkers, N. Y.
Waldron, Charles, Jr.....Yonkers, N. Y.
Willis, Charles M.....New York, N. Y.
Wilson, Ward .....Easton, Pa.
Wuest, Henry A.....Brooklyn, N. Y.
Zook, Samuel Kurtz .....Hackensack, N. J.

SUMMARY:

Active Members	426
Associate Members	110
Junior Members	29
Total	565

THE PRESIDENT: The meeting will please come to order. At the very beginning of the meeting I want to make one particular announcement. I should like to have each member, as he rises to speak, announce his name, including his initials. You can hardly expect a chairman to recollect the names of all the members of the Institute and remember their faces, especially as many of them I have never seen before. Therefore it will be necessary for the members to announce their names, so that the records can be properly prepared by the stenographer.

CONSIDERATION OF MINUTES OF LAST ANNUAL MEETING.

The next business in order is the consideration of the minutes of the last meeting. I would suggest that, as the minutes have been printed under the direction of the Publication Committee and distributed to all the members, a resolution would be in order to approve them as printed and distributed.

Mr. W. A. Baehr: I move that the minutes as submitted be approved.

The motion was seconded, and carried.

REPORT ON ELECTION AND INTRODUCTION OF NEW MEMBERS.

The President: I now propose to anticipate one section of the report of the Directors, which has reference to the members elected during the year. I think it would be a proper and a courteous act to bring these members promptly into accord with us and extend to them the welcome that they ought to receive. There again I think it is better not to take up the time of the Institute in unnecessary reading. There has been a very full printed report made to all the members of the Institute, giving the names of all the men elected to active membership, transfers of junior to active, and transfers of associate to active, and all these facts are given in connection with the dates on which they were elected, also the election of associate members and junior members. I have before me the official report of the Assistant Secretary, Mr. West Bissell, on that subject. You have a copy of that report in your hands, or should have. I would suggest, therefore, that the names on this report be omitted so as to save time, as we have got a large program to meet.

Mr. Doty: I move the adoption of the President's suggestion.

The motion was seconded.

The President: It is moved and seconded that we omit the reading of the names of men elected to membership in the several grades during the past year, that information now being in your hands in printed form. All in favor of that motion will say aye. Contrary, no.

The motion was carried.

The President: In accordance with By-Law No. 4, I declare that these men have been elected and I ask those

members that have been elected during the year and who are present, to rise.

(Various gentlemen in the audience arose.)

THE PRESIDENT: Gentlemen, I welcome you to the Institute and hope you will participate in the proceedings now to commence. I am sorry that not more of the members-elect are present, and assure the members of the Institute, if they have forgotten what is on the list, that the gentlemen who have risen do not at all represent the number of those who have been elected.

REPORT OF THE BOARD OF DIRECTORS.

THE PRESIDENT: We are now about to take up the Directors' report and in that connection I wish to make an explanation. It has to do with the method in which the business of the year has been carried on. Last year Mr. Dunbar declined to permit his name to be used for the election as Secretary. A committee had been appointed to nominate a Secretary, or suggest the name of a man for Secretary and Treasurer. That committee was unable to bring forward a recommendation, so at the last minute Mr. Dunbar was requested to accept the combined office of Secretary and Treasurer, with the distinct understanding that we would not call upon him for any labors, except the official matters of signing papers and the like, and the closing up of the work of the past year. Mr. Dunbar kindly consented to this suggestion and was elected under that stipulation.

Under the direction of the Board of Directors, the President was required to arrange as he best might for the carrying on of the work that ordinarily devolves upon the Secretary and the Treasurer, and that was done by appointing Mr. West Bissell as Assistant Secretary in charge of the headquarters, and having Mr. Robert O. Luqueer, an active member of the Institute, assist the President at his own office in the balance of the duties of the Assistant Secretary. Mr. Luqueer will read the report of the Directors.

REPORT OF BOARD OF DIRECTORS.

NEW YORK, N. Y., October 21, 1908.

To American Gas Institute:

GENTLEMEN:—The Board of Directors has the honor to submit its Third Annual Report as follows:

OCCURRENCES OF PAST YEAR.

Meetings.

Three meetings of the Board have been held during the year, viz., March 17th, August 20th and October 20th, at the Headquarters in New York City.

New York Headquarters.

The permanent headquarters, rooms 801 and 802, of the Engineering Societies' Building, West Thirty-ninth street, New York City, have been furnished and open since November 1907, for the use of members, with Mr. West Bissell in charge as Assistant Secretary.

Delinquent List and Statements of Account.

On taking up the work of the year, it was found that a large sum was owed to the Institute in unpaid dues and fees. The practice of sending out monthly statements of accounts was inaugurated, and has resulted in a very material reduction of the delinquent account.

Sales of Proceedings, Pamphlets, Etc.

The records, Proceedings, and other effects of the three old Associations having been collected at Headquarters, the Institute found itself in possession of a quantity of matter for which it did not have adequate storage space—in fact, it became necessary to obtain a small room in a storage warehouse to relieve the Headquarters' rooms. This being the case, an effort was made to dispose of as many of the past publications as possible, and a circular was enclosed to each

member of the Institute with the annual Proceedings, giving a price list of the matter in stock. While the sales resulting from this circular were encouraging, they were by no means sufficient to relieve the Institute of the necessity of renting a storage room.

Badges.

A circular bearing a facsimile of the Membership Badge and requesting purchases, was sent to each member of the Institute. As a result, a number of sales were made, but the Institute still has in stock a large quantity of badges which were purchased under the original contract which was made with the expectation that there would be a heavy demand for badges. This demand has not materialized and, as a consequence, the Institute still has a considerable sum idly invested.

By-Laws.

The Board of Directors at their meeting held March 17th, 1908, passed amendments to the By-Laws as follows:

By-Law No. 1. Amended so that when applications of candidates for membership are personally signed by the requisite number of members, the requirement of confidential letters of endorsement is optional at the discretion of the Membership Committee instead of obligatory as before.

By-Law No. 4. Amended by dropping out the words "June" and "December," so that the ballots for election of candidates to membership now go out twice a year (on or about the first day of March and September) instead of four times.

The By-Laws as found in Volume II of the Proceedings appear amended as above.

The Board of Directors, at their meeting held October 20th, passed amendments to the By-Laws as follows:

By-Law No. 3. Striking out the words "At their first meeting each year," and substituting the words "Immediately after the meeting at which they are elected." This change was made to conform to the provision for appointment of the Finance Committee, as both of these Committees have to take

up their duties promptly after the adjournment of the annual meetings.

By-Law No. 22. Striking out the words "At their first meeting each year," and substituting the words "Not later than six (6) months prior to each annual meeting of the Institute."

As thus amended more definite provision is made for the appointment of the Arrangement Committee.

By-Law No. 4. After the words "Delivered unopened to the Secretary," on the third and fourth lines from the top of page 990, 1907 Proceedings, insert the words "Which shall be counted as an affirmative vote on all the names not crossed out."

Also striking out the word "he" and substituting the words "the Secretary." These changes were made to give a more definite indication of the purpose of the By-Law.

By-Law No. 14. Add to the end the words "In the manner prescribed in By-Law No. 15."

By-Law No. 15. Add at the end the words "At once, unless the election is postponed as covered by By-Law 14. In either case poll may be opened outside the meeting room in some adjacent and convenient place. If there is no objection, one ballot may be cast for those nominated by the Committee." The amendment to By-Laws 14 and 15 bring into accord the several provisions in the Constitution and By-Laws in relation to election of officers and directors, and also provide for an open poll, outside the meeting room in case of contest, so securing non-interference with the progress of the meeting.

By-Law No. 9. After the words "Certificate of Membership," insert the words "in accordance with his grade." This change provides for the certificates of membership indicating thereon the grade of membership.

A new By-Law to be known as No. 23. "At the opening of the first session following the election of officers the President shall appoint a committee of three to recommend the place to be designated by the Institute for the next annual meeting."

By-Law 23. To be renumbered 24.

By-Law 24. To be renumbered 25.

Abstracts.

The Board of Directors last year in their report to the Institute recommended that the issuance of the Abstracts be continued.

At its first meeting this year the Board, after careful consideration, decided that the finances of the Institute did not warrant the publication and distribution of the Abstracts free of charge. A circular letter announcing this decision and asking for subscriptions from those who desired the Abstracts was sent to each member of the Institute and, as a result, there are now slightly more than 300 subscriptions on the list for $5.00 each. This income is just sufficient to cover the cost of printing and distributing the publication to the subscribers, the original matter being donated to the Institute by the United Gas Improvement Company.

Two issues of the American Gas Institute Bulletin of Abstracts have been distributed to the subscribers this year—the first a large issue of 699 pages, and the second a smaller issue of 176 pages. These two issues complete Volume 2. Henceforth the Bulletin will be issued bi-monthly, and application to enter it as second-class mail matter is now pending at the New York Postoffice. If this application is granted, there will be a material saving in the cost of distribution.

Affiliation.

The matter of affiliation, under the agreement drawn up in accordance with Section 55 of the Constitution, has been taken up with the following State and district associations:

Illinois Gas Association,
Iowa District Gas Association,
Wisconsin Gas Association,
Michigan Gas Association,
Indiana Gas Association,
Pacific Coast Gas Association,
Empire State Gas and Electric Association.

The Illinois, Wisconsin and Iowa Associations have affiliated.

Mr. J. H. Eustace, of Chicago, was elected by the Illinois Association as its representative member on the Board of Directors of the Institute; Mr. S. J. Glass, by the Wisconsin, and Mr. Jansen Haines by the Iowa Association.

The original research work undertaken by these affiliated associations will be later referred to in the Report of the Technical Committee.

The Pacific Coast Gas Association has declined the invitation to affiliate, stating "that it was decided that by reason of the territorial boundaries of the Pacific Coast Gas Association, and its remoteness from Eastern centers, it would be to a great extent detrimental to the interests of the Gas Companies on the Pacific Coast to surrender the peculiar privileges which are enjoyed in the maintenance of the entity of the Pacific Coast Gas Association."

The matter is still under consideration by the Michigan, Indiana and the Empire State Gas and Electric Associations.

Certain questions having developed during the past year in regard to affiliation, including the interpretation of Section 55 of the Constitution, in relation thereto, your Directors adopted the following interpretation of Section 55 to govern until further orders:

"In regard to the work of the affiliated societies, Section 55 of the Constitution is interpreted by the Technical Committee to mean that each of the affiliated societies shall appoint each year, a committee of one or more of its members to undertake research work, and that the selection of subjects for this work, and the work itself shall be under the direction and supervision of the Technical Committee through the proper officials of the affiliated societies. But we interpret this to mean that the affiliated societies may undertake other research work provided that they consult and advise with the Technical Committee on such other work, as far as practicable."

Your Board further referred the whole subject of affiliation to a committee of five to be appointed by the President, this committee also to recommend the necessary changes, if any, in the Constitution and By-Laws. The President appointed as such committee: E. G. Cowdery, H. L. Doherty, Walton Clark, J. H. Eustace, Jansen Haines.

Exhibition.

Last year the Board recommended that, at future meetings of the Institute, an exhibition room be provided for any exhibits of apparatus and appliances that manufacturers might desire to make. Your Directors, this year, after careful consideration and discussion, decided to forego the exhibition *this year* and to co-operate with the National Commercial Gas Association in giving a joint exhibition. This decision was reached after a conference with a committee of the Commercial Association at which the question of affiliation with the Institute was discussed. It was decided that affiliation was not feasible under the present rules, but that co-operation would be highly desirable. Co-operation along the line of exhibitions commended itself to your Board of Directors. The time of our annual meeting (October) is too early in the season to best suit the manufacturers; your Directors were assured that an exhibition in the West would please the manufacturers who, for two years past, have been exhibiting in New York City, at the Commercial meeting at a considerable expense. The Commercial Association was willing to have its next meeting in the West and has decided upon Chicago as the place, and December 8th, 9th and 10th as the time.

The fact that the place of the Institute meeting had been changed from Detroit to New York seemed all the more reason why the Institute should join with the Commercial Association in giving this exhibition in the West this year.

The joint exhibition is in charge of a committee of seven, consisting of four members, including the Chairman, from the Commercial Gas Association, and three members from the Institute.

The three gentlemen appointed on this committee to represent the Institute are Mr. H. L. Rice, Mr. V. F. Dewey and Mr. W. J. Serrill, from whom a report will be received at this meeting.

International Committee for Standardization of Threads for Gas Appliances.

The Institute was invited by the Societe Technique de l'Industrie du Gaz en France, to take part in an international

conference for the purpose of studying and carrying out the standardization of the screw threads on gas appliances.

The Technical Committee appointed Mr. A. G. Glasgow, as delegate, to attend this conference, and his report will be received at this meeting.

A very complete exhibit was prepared under the direction of the Technical Committee consisting of models of the various forms of threads in use in the United States. This exhibit was forwarded to Paris and presented to the French Society, and was of material assistance to the delegates.

Through the intervention of the American Gas Institute, the American Society of Mechanical Engineers were also invited to take part in the conference, and their delegates attended and acted in complete accord with the representatives of the Institute.

Bureau of Information.

The question of the continuation of the work of the Bureau of Information was referred at the last annual meeting to the Technical Committee.

This committee appointed the members composing the Bureau of Information this year. The result of the work of the Bureau is fully set forth in the report to be later presented at this meeting.

Question Box.

The revision of the Question Box on Manufacture of Gas was not completed to the satisfaction of the Committee having the matter in charge in time to be included in last year's Proceedings. The Board of Revision will report at this meeting.

Beal Medal.

The thanks of the Institute are due to Mr. William R. Beal for his continuance of the yearly award of the Medal bearing his name, for the benefit of the Institute. It will be remembered that this medal was offered yearly by Mr. Beal to the American Gas Light Association for award to the writer of that paper which was considered the best of those pre-

sented at any annual meeting. A committee consisting of three Past Presidents of the Association were judges of the papers and, if no paper was in their estimation of sufficient merit, no award was made.

The Board of Directors, on behalf of the Institute, has accepted Mr. Beal's offer and recommends that the former method of decision as to the award be continued except that if, for any reason, it would not be possible to obtain a committee of three Past Presidents of the Institute, the necessary number to complete the committee shall be chosen from among the Past Presidents of the American Gas Light Association.

As, under our present organization, much of the best work may be done by committees the Directors asked and obtained Mr. Beal's consent to allow Committee Reports to be considered as well as papers in awarding the Medal in the future.

As yet, no scheme has been worked out whereby the Medal may be awarded to a committee. The Board has this now under consideration.

The Beal Medal Committees appointed to consider the papers presented at the 1906 and 1907 meetings of the Institute, will report at this meeting.

The Institute, as the successor of the American Gas Light Association, will also receive at this meeting the report of the Beal Medal Committee on papers presented at the 1905 meeting of that association.

Change of Place of Meeting.

At the last annual meeting, Detroit was decided upon as the next place of meeting. The President believing that it was to the interest of the Institute to have the meeting this year in New York, presented the case to Mr. Lynn and his associates, and after obtaining their consent to his proposed change, laid the matter before the Board of Directors. The Board of Directors also consenting to the change, a letter ballot of all the active members was taken, with the result that a large majority voted in favor of the change, and so the meeting was arranged for New York.

Next Place of Meeting.

The President was authorized to appoint a Committee to recommend the next place of meeting at the opening of the first session following the election of officers.

Committee on Arrangements.

In accordance with By-Law No. 22, the following Committee on Arrangements for the meeting was appointed: W. R. Addicks, Chairman; J. H. Jourdan, E. C. Witherby, A. E. Forstall, C. H. Dickey, R. A. Carter, A. P. Lathrop, S. F. Hayward, G. G. Ramsdell, W. J. Clark, W. Cullen Morris, T. R. Beal, W. M. Eaton, G. E. Woods, R. O. Luqueer, E. E. Witherby, Colin C. Simpson.

Sectional Work.

The Committee on Sectional Work reported its recommendations, which were discussed at length. The Board referred the matter back to the Committee with the request that it confer with the Committee on Affiliation already appointed, and lay before the Board a joint report and recommendation not later than February 1st next.

International Incandescent Photometric Commission.

The Technical Committee having called attention to the need of a representative on the International Incandescent Photometric Commission, organized in Paris during the year 1900, the Board requested Mr. Arthur G. Glasgow to serve in such capacity to succeed Dr. E. G. Love, the former representative of the American Gas Light Association on that Committee.

Public Relations Committee.

The Public Relations Committee reported that no matters had come before it for definite action, but steps had been taken to determine whether some measure of co-operation between the Institute and the League of American Municipalities could be developed in the interest of the gas industry. The Committee reported that it had suggested that the League appoint a Committee to confer with a Committee of the Insti-

tute to determine by conference if any opportunity existed for profitable co-operation. Should the League of Municipalities accept the invitation and appoint such a Committee, the matter on the part of the Institute will be in the hands of the Institute's Public Relations Committee.

Your Board accepted the report of the Committee and left the matter in its hands as suggested.

General Committees.

That portion of our organization which is cared for by the Public Relations and Technical Committees has, during the year, demonstrated its efficiency as will be seen by the proceedings to follow, and in the opinion of your Directors should be further developed as occasion may warrant and demand.

Responsibility for Papers.

Your Board at its meeting of October 20th passed the following resolution:

All papers presented to the Institute at its Conventions by individual members shall be headed by the statement that the Institute, as a body, is not responsible for the opinions and statements of fact in the papers or discussion thereof.

Papers and Reports Approved.

The following papers, general reports and special reports of the Sub-Committees of the Technical Committee, in some cases amended, have been approved for reading at this meeting:

List of Papers.

"High Pressure Gas Distribution," by Mr. Jacob D. von Maur, St. Louis, Mo.

"Benzol Enrichment," by Mr. E. H. Earnshaw, Newark, N. J.

"Some Further Remarks on the Photometry of Gas," by Mr. Charles O. Bond, Philadelphia.

"The Physical Theory of Coal Carbonization," by Mr. W. H. Fulweiler, Philadelphia.

"Vertical Retorts and Other Systems of Coal Carbonization," by Mr. J. H. Taussig, Philadelphia.

"Modern Wrought Gas Pipe," by Mr. Frank N. Speller, Pittsburg.

"Report of Progress on Dipping Meters in Philadelphia," by Mr. W. A. Castor, Philadelphia.

"Holder Cup and Tank Heating," by Mr. C. J. Ramsburg, Philadelphia.

"Better Gas Illumination," by Mr. Thomas J. Litle, Gloucester, N. J.

General Reports.

Report of the Public Relations Committee, Mr. E. G. Cowdery, Chicago, Chairman.

Report of Technical Committee, Mr. W. H. Gartley, Philadelphia, Chairman.

Report of Board of Revision of the Question Box on the Manufacture of Gas, Mr. J. D. Shattuck, Chester, Pa., Chairman.

"Wrinkles," Mr. M. R. Bump, Editor, New York.

Accidents, Details by Members.

Special Reports of the Sub-Committees of the Technical Committee.

Report of Committee on Calorimetry, Mr. R. B. Brown, Milwaukee, Chairman.

Report of Committee on Uniform System of Accounting, Mr. R. A. Carter, New York, Chairman.

Report of Committee on Pipe Standards, Mr. A. S. Miller, Baltimore, Chairman.

Report of Committee on Electrolysis, Mr. A. G. Glasgow, London, Chairman.

Report of Committee on Unit of Light, Mr. W. H. Gartley, Philadelphia, Chairman.

Report of Bureau of Information, Mr. W. A. Baehr, St. Louis, Chairman.

Report of Proceedings of International Committee for Standardization of Threads for Gas Appliances, Mr. A. G. Glasgow, London, Delegate.

REPORTS.

Membership Report.

Active Members.

As per Membership Rolls, October 1, 1907		930	
Elected Ballot of April 18, 1908.....		27	
Transferred from Associate Ballot of April 18, 1908		1	
Transferred from Junior Ballot of April 18, 1908		1	
Elected Ballot of September 15, 1908....		54	
Transferred from Associate Ballot of September 15, 1908		1	
Transferred from Junior Ballot of September 15, 1908		2	
		1016	
Deceased	2		
Resigned	27		
Failed to accept election	3		
	32	32	
		984	984

Associate Members.

As per Membership Rolls, October 1, 1907		218	
Elected Ballot of April 18, 1908.....		11	
Elected Ballot of September 15, 1908....		17	
		246	
Transferred to Active Ballot of April 18, 1908	1		
Transferred to Active Ballot of September 15, 1908	1		
Resigned	9		
Failed to accept election	3		
	14	14	
		232	232

Junior Members.

As per Membership Rolls, October 1, 1907		67	
Elected Ballot of April 18, 1908		12	
Elected Ballot of September 15, 1908		17	
		96	
Transferred to Active Ballot of April 18, 1908	1		
Transferred to Active, Ballot of September 15, 1908	2		
Resigned	1		
	4	4	
		92	92
			1308

Total Membership, 1308.

DECEASED.

Active.

H. W. Sexton, Anniston, Ala., July 17, 1907.
B. F. Ellison, Superior, Wis., September 1, 1908.

RESIGNED.—Resignations Accepted.

Active.

F. S. Benson, Brooklyn, N. Y.
Paul Bucher, Lebanon, Pa.
C. A. Byers, Philadelphia, Pa.
W. L. Cosgrove, Atlanta, Ga.
E. A. Cronin, Kansas City, Mo.
W. J. Dibbens, Guthrie, Okla.
F. C. Duncan, Princeton, Ill.
J. C. Dunham, Pensacola, Fla.
H. J. Elliot, Chicago, Ill.
Albert Fendig, Brunswick, Ga.
J. H. Fitzgerald, Beaumont, Tex.
J. R. Gilkyson, Camden, N. J.

H. C. Graves, Dayton, Ohio.
James Green, St. Louis, Mo.
H. C. Higgins, Centralia, Ill.
C. H. Irwin, Long Branch, N. J.
M. B. Layton, Pittsburg, Pa.
J. Linstedt, Manitowoc, Wis.
R. Macmillan, Kansas City, Mo.
W. H. Morgans, Pontiac, Mich.
E. J. O'Beirne, New Orleans, La.
L. T. Palmer, Tonawanda, N. Y.
F. K. Pelton, Detroit, Mich.
F. L. Price, Highland Park, Ill.
W. J. Salter, Meridian, Miss.
J. C. Small, Aurora, Ind.
Ralph Woodward, Grafton, Mass.

Associate.

C. O. Ayers, Chicago, Ill.
J. L. Green, St. Louis, Mo.
G. B. Gunderson, Detroit, Mich.
Fred Jones, Cincinnati, O.
A. J. McCleary, Philadelphia, Pa.
E. M. Mancourt, Detroit, Mich.
G. A. Merkt, Marlboro, Mass.
E. C. Merrill, Pittsburg, Pa.
Julius Wile, Rochester, N. Y.

Junior

George F. Cassidy, New York, N. Y.

The following persons have failed to accept their election.

Active.

E. B. Meginnis, Dallas, Tex., election of October 17, 1906.
Jos. Clark, Cape Girardeau, Mo., election of October 1 1907.
Fred A. Dawes, Gainesville, Tex., election of January 3, 1907.

Associate.

R. L. Kenah, New Brighton, Pa., election of October 17th, 1906.

F. W. Salmon, Burlington, Iowa, election of October 17th, 1906.

Clifford Bargamin, Newport News, Va., election of September 1st, 1907.

The following is a list of persons elected to membership in the American Gas Institute during the past year:

ELECTION APRIL 18, 1908.

Active Membership.

Battin, Wm. Ingram, Superintendent of South Station, Peoples Gas Light and Coke Co., 25th and Loomis Sts., Chicago, Ill.

Clarke, Alfred, President and General Manager, Arlington Gas Light Co., 131 State St., Boston, Mass.

Dieterle, Edw. A., Assistant Superintendent, 31st St. Plant, Peoples Gas Light and Coke Co., 31st St. and Pitney Court, Chicago, Ill.

Durbin, C. K., Vice-President, United States Light and Traction Co., 407 Colorado Building, Denver, Col.

Einstein, A. C., President, St. Louis County Gas Co., 709 Pine St., St. Louis, Mo.

Ely, Franklin J., Assistant Superintendent Street Department, Peoples Gas Light and Coke Co., 157 Michigan Ave., Chicago, Ill.

Flook, Wm. M., Assistant Secretary, Peoples Gas Light and Coke Co., of Chicago, Ill., 54 Wall St., New York, N. Y.

Harper, Robert Brinton, Assistant Chemist, Peoples Gas Light and Coke Co., Archer Ave. and Hough Place, Chicago, Ill.

Harriman, Horace Marshall, Assistant Superintendent, South Station, Peoples Gas Light and Coke Co., 25th and Loomis Sts., Chicago, Ill.

Hastings, Frank S., President, Indianapolis Gas Co., 80 Broadway, New York, N. Y.

Hoy, Charles Winston, General Superintendent, Consumers' Gas and Fuel Co., Atlantic City, N. J.

Jones, Paul R., Auditor, Henry L. Doherty & Co., 60 Wall St., New York, N. Y.

Laird, Frank J., Manager, St. Louis County Gas Co., Webster Groves, Mo.

Lane, William P., Superintendent, Point Breeze Works, United Gas Improvement Co., Philadelphia, Pa.

Levering, Wm. Wallace, Treasurer, Citizens' Gas Co. of Trenton, Mo., 1328 Chestnut St., Philadelphia, Pa.

Little, Arthur Dehon, Chemical Engineer in General Practice, 93 Broad St., Boston, Mass.

McLean, H. B., Superintendent, Fuel Gas Department, Consolidated Gas Co. of New York, 112 W. 42d St., N. Y.

Martin, Wm. Paul, Vice-President, Peoples Gas Light and Coke Co., 157 Michigan Ave., Chicago, Ill.

Moore, Edwin A., President, American Coke and Gas Construction Co., Camden, N. J.

Phifer, Walter James, Superintendent, Coatesville Gas Co., Coatesville, Pa.

Sackett, Frederick Mosely, President, Louisville Gas Co., 729 Fourth Ave., Louisville, Ky.

Scott, Rossiter Stockton, Assistant Engineer, Consolidated Gas, Electric Light and Power Co., Baltimore, Md.

Sloan, Charles C., General Superintendent, Calumet Gas Co., Laurium, Mich.

Staniford, Arthur Fowler, Assistant Treasurer and Auditor, Brooklyn Union Gas Co., 180 Remsen St., Brooklyn, N. Y.

Sullivan, Beverley Nathaniel, Manager, Winston-Salem Light and Fuel Co., Winston-Salem, N. C.

Wilde, Charles, Engineer of Mains, Suburban Gas Co., 206 South Fourth St., Darby, Pa.

Wing, John Franklin, Superintendent of Commercial Point Station, Boston Consolidated Gas Co., Dorchester, Mass.

Transfer—Junior to Active.

Weisgerber, Edwin C., Manager and Secretary, Zanesville Gas Light Co., 24 Opera Block, Zanesville, Ohio.

Transfer—Associate to Active.

Luqueer, Robert Orr, Assistant Engineer, Humphreys & Glasgow, 31 Nassau St., New York, N. Y.

ELECTION OF SEPTEMBER 15TH, 1908.

Active Membership.

Angell, Frederick J., Mechanical Engineer, 38 Victoria St., London, S. W., England.

Ayers, Chester T., Secretary, The Indiana Natural Gas and Oil Co., 115 Dearborn St., Chicago, Ill.

Barnitz, F. R., General Superintendent, Commercial Department, Consolidated Gas Co. of New York, 4 Irving Place, New York, N. Y.

Barrett, Wm. F., with Engineering Department, Peoples Gas Light and Coke Co., 157 Michigan Ave., Chicago, Ill.

Benedict, Clarence M., New Business Agent, The United Gas Imp. Co., Broad and Arch Sts., Philadelphia, Pa.

Brundage, Henry M., Comptroller, Consolidated Gas Co. of New York, 4 Irving Place, New York, N. Y.

Buckminster, Rollin, Superintendent Lowell Gas Light Co., School St., Lowell, Mass.

Cabell, John L., Assistant Superintendent, The United Gas Improvement Co., Waterbury, Conn.

Carnes, Frank S., Superintendent South Div. St. Department, Peoples Gas Light and Coke Co., 134 West 64th St., Chicago, Ill.

Carroll, Lafayette D., Mechanical Engineer, 38 Victoria St., London, S. W., England.

Dallas, Robt. E., New Business Agent, The United Gas Improvement Co., Broad and Arch Sts., Philadelphia, Pa.

Davies, James E., Branch Manager and Superintendent, Calumet Div., Peoples Gas Light and Coke Co., 9051 Commercial Ave., Chicago, Ill.

DeLong, James C., Vice-President and General Manager, Syracuse Lighting Co., Syracuse, N. Y.

Elliott, LaRue B., Assistant Superintendent North Division Street Department, Peoples Gas Light and Coke Co., 157 Michigan Ave., Chicago, Ill.

Fullagar, Wm. E., Manager, Canon Gas Co., Canon City, Col.

Gawtry, Lewis B., Vice-President, Consolidated Gas Co. of New York, 4 Irving Place, New York, N. Y.

Ginley, John, Superintendent, West Division, Peoples Gas Light and Coke Co., 157 Michigan Ave., Chicago, Ill.

Graham, Allan S., Assistant Superintendent, Harrisburg Gas Co., Harrisburg, Pa.

Grey, John Chester, Commercial Agent, Des Moines Gas Co., 413 Locust St., Des Moines, Iowa.

Hare, C. Willing, Manager, New Business Department, The United Gas Improvement Co., 1401 Arch St., Philadelphia, Pa.

Harrington, Walter K., General Superintendent Meters, Consolidated Gas Co. of N. Y., 4 Irving Place, New York, N. Y.

Hawthorn, Wm. James, Superintendent West 44th St. Station, Consolidated Gas Co. of N. Y., foot of West 44th St., N. Y.

Hemminger, George Reverdy, Engineer with The United Gas Improvement Co., Broad and Arch Sts., Philadelphia, Pa.

Holmes, Herbert M., Assistant Secretary and Assistant Treasurer, N. Y. and Richmond Gas Co., 264 Bay St., Stapleton, New York City, N. Y.

Horning, George R., Superintendent and Agent, Northern Liberties Gas Co., 50 Laurel St., Philadelphia, Pa.

Keegan, Chas. F., Superintendent Twenty-first St. Station, Consolidated Gas Co. of N. Y., 501 East 21st St., New York, N. Y.

Laraway, B. R., Secretary and General Manager, Jackson Gas Co., Jackson, Mich.

Lawlor, Jas. W., Assistant Superintendent, Willow St. Station, Peoples Gas Light and Coke Co., Chicago, Ill.

Lee, Francis Valentine T., Assistant to the President, Pacific Gas and Electric Co., 925 Franklin St., San Francisco, Cal., and cor. 59th St. and College Ave., Oakland, Cal.

McGowan, James B., General Agent, McGowan, Small & Morgan, Grantees, 908 Grand Ave,. Kansas City, Mo.

McIntyre, Andrew, Superintendent, Northwestern Gas Light and Coke Co., Blue Island, Ill.

Martin, Edmund H., Commercial Agent, Omaha Gas Co., Omaha, Neb.

Mather, John L., General Manager, Merion & Radnor Gas and Electric Co., Ardmore, Pa.

May, Frank E., Vice-President, Indiana Natural Gas and Oil Co., 115 Dearborn St., Chicago, Ill.

Mayer, Joseph E. J., Purchasing Agent, Peoples Gas Light and Coke Co., 157 Michigan Ave., Chicago, Ill.

Morgans, M., Manager, Chicago Heights Gas Co., 1616 Otto Boulevard, Chicago Heights, Ill.

Neely, M. L., Superintendent, Lima Gas Light and Lima Natural Gas Co., Lima, Ohio.

Postley, Arthur, Assistant General Superintendent Mains, Consolidated Gas Co. of New York, 4 Irving Place, New York, N. Y.

Ramsay, David G., Assistant Superintendent Pitney Court, Station, Peoples Gas Light and Coke Co., 31st St. and Pitney Court, Chicago, Ill.

Rogers, John McClelland, Assistant Purchasing Agent, Public Service Corporation of New Jersey, 763 Broad Street, Newark, N. J.

Ross, Harry C., Superintendent of Distribution, Consolidated Gas, Electric Light and Power Co., Baltimore, Md.

Scott, John M., Auditor, McGowan, Small & Morgan, Grantees, 908 Grand Ave., Kansas City, Mo.

Shiebler, Marvin, Gas Engineer, 147 Milk St., Boston, Mass.

Sidenstick, Elmer E., Assistant Superintendent, North Station, Peoples Gas Light and Coke Co., 157 Michigan Ave., Chicago, Ill.

Smith, Peter N., Assistant Secretary, Sioux City Gas and Electric Co., Sioux City, Iowa.

Taylor, Wm. H., Jr., Assistant Superintendent, Omaha Gas Co., 20th and Center Sts., Omaha, Neb.

Thomson, W. H., Jr., General Manager, Union Light, Heat and Power Co., Fargo, N. D.

Titzel, Christian Edgar, Manager, Lancaster Gas Light and Fuel Co., Lancaster, Pa.

Underhill, Henry L., Assistant Engineer of Manufacture, Consolidated Gas Co. of New York, 501 E. 21st St., New York, N. Y.

Vander Willigen T. A., 19 Ave. Macau, Brussels, Belgium, Continental Representative of Messrs. Humphreys & Glasgow.

Weber, Theo. J., Consulting Engineer, Child Hulswit & Co., 411 Michigan Trust Building, Grand Rapids, Mich.

Whiteley, Benjamin, Assistant Treasurer, Consolidated Gas Co. of N. Y., 4 Irving Place, New York, N. Y.

Williams, Robt. F., Assistant Secretary and Treasurer, Merion & Radnor Gas and Electric Co., Ardmore, Pa.

Woodall, George Herbert, Engineer with The United Gas Improvement Co., 1728 Chestnut St., Philadelphia, Pa.

Transfer—Junior to Active.

Cushman, George Herbert, Superintendent Electric Department, San Antonio Gas and Electric Co., San Antonio, Texas.

Moorhouse, Louis B., Superintendent, Gas Department, San Antonio Gas and Electric Co., San Antonio, Texas.

Transfer—Associate to Active.

Mead, G. W., President, Indiana Natural Gas and Oil Co., 79 Wall St., New York, N. Y.

Election of April 18, 1908.

Junior Membership.

Bettle, Wm. Henry, Assistant to Superintendent of Meters, Philadelphia Gas Works, Oaklyn P. O., N. J.

Bryans, Henry Bussell, Assistant General Foreman Frankford District, Philadelphia Gas Works, 3311 Ridge Ave., Philadelphia, Pa.

Dickey, Samuel Jackson, Engineer with United Gas Improvement Co., Broad and Arch Sts., Philadelphia, Pa.

Ely, Seth Harrison, Superintendent Dover, Rockaway and Port Oram Gas Co., Dover, N. J.

Fancy, Raymond Ashley, Complaint Clerk Newton and Watertown Gas Light Co., Newton, Mass.

Harrison, George Morton, Superintendent's Assistant, Westchester Lighting Co., Port Chester, N. Y.

Leuenberger, Walter Arnold, Superintendent of Works, Racine Gas Light Co., Racine, Wis.

O'Donnell, Charles J., Residual Foreman Philadelphia Gas Works, Richmond and Tioga Sts., Philadelphia, Pa.

Offutt, M. Webb, Constructing Engineer with United Gas Improvement Co., Broad and Arch Sts., Philadelphia, Pa.

O'Keefe, James Garwood, Cadet Engineer, Market St. Gas Works, Public Service Corporation, Newark, N. J.

Pearce, William Faulkner, Chemist Richmond Gas Works, Philadelphia, 139 North 50th Street, Philadelphia, Pa.

Singer, Sidney Charles, Cadet Engineer, Syracuse Lighting Co., Syracuse, N. Y.

Associate Members.

Chapin, Edwin S., Vice-President, Welsbach Gas Lamp Co., 78 Bowery, New York, N. Y.

Court, August, Secretary, Gas Bench Construction Co., Linmar Building, St. Louis, Mo.

Harris, George E., Vice-President, F. K. Wells Company, 265 Broadway, New York, N. Y.

Mills, Frank M., Secretary, Abendroth Bros., Port Chester, N. Y.

Morley, Robert L., Western Manager, The Michigan Stove Co., 256 South Clinton St., Chicago, Ill.

Sprague, Henry H., President, Sprague Meter Co., 205 Water St., Bridgeport, Conn.

Storrs, Aaron Putnam, President, Storrs Mica Company, Oswego, Tioga County, N. Y.

Sullivan, Edward S., firm of Sullivan Bros., 11 Main St., Flushing, Long Island, N. Y.

Sullivan, Wm. H., firm of Sullivan Bros., 11 Main St., Flushing, Long Island, N. Y.

Wilshire, Frank W., General Manager of Sales, Fairmount Coal Co., 1 Broadway, New York, N. Y.

Yetter, Louis N., Sales Agent, William Kane Manufacturing Co., 1909 Adams St., Philadelphia, Pa.

Election of September 15, 1908.

Junior Membership.

Alburger, Elmer R., Special Inspector of Appliances, United Gas Improvement Co., Room 703, U. G. I. Building, Broad and Arch Sts., Philadelphia, Pa.

Baldt, George Henry, Assistant Chemist, 25th Ward Works, The United Gas Improvement Co., Richmond and Tioga Sts., Philadelphia, Pa.

Baxter, Edw. O., Chief Clerk, Westchester Lighting Co., 60 Ravine Ave., Yonkers, N. Y.

Carter, Robert A., Jr., Assistant Engineer, Central Union Gas Co., 905 East 138th St., New York, N. Y.

Colquhoun, Edw. M., New Business Agent, The United Gas Improvement Co., Broad and Arch Sts., Philadelphia, Pa.

Crowell, James Kenneth, Assistant to Engineer, Westchester Lighting Co., First Ave. and First St., Mt. Vernon, N. Y.

Harris, Henry S., Cadet Engineer, Westchester Lighting Co., Mt. Vernon, N. Y.

Mathews, Eugene H., General Manager, Morristown Gas Light Co., 43 South St., Morristown, N. J.

Muller, Herman, Jr., Works Assistant, N. Y. and Richmond Gas Co., 322 Richmond Road, Stapleton, N. Y.

Sargeant, Frank Washburn, General Foreman, N. Y. and Richmond Gas Co., Hope Ave., Rosebank P. O., N. Y.

Scott, Alex. H., Assistant Foreman of Fitters, Spring Garden Dist. Phila. Gas Works, 509 Hansberry St., Germantown, Philadelphia, Pa.

Taylor, Allyn C., Gen. Foreman of Mains and Services, Spring Garden Dist. Phila. Gas Works, 1615 N. 9th St., Philadelphia, Pa.

Turner, Charles Alexander, Assistant Main and Service Foreman, Philadelphia Gas Works, 1615 N. 9th St., Philadelphia, Pa.

Vittinghoff, Hans von, Cadet Engineer, Westchester Lighting Co., Yonkers, N. Y.

Waldron, Charles, Jr., General Street Foreman, Westchester Lighting Co., 119 Woodworth Ave., Yonkers, N. Y.

Warnick, John H., Cadet Engineer, The United Gas Improvement Co., 218 W. Wyoming Ave., Germantown, Philadelphia, Pa.

Wuest, Henry A., Chief Clerk, Brooklyn Union Gas Co., Foot of North 12th St., Brooklyn, N. Y.

Election of September 15, 1908.

Associate Membership.

Bartlett, John Crawford, President, Bartlett & Co., Inc., 1938 Market St., Philadelphia, Pa.

Brown, Wm. N., Dist. Manager, Ruud Mfg. Co., 41 Court St., Buffalo, N. Y.

Crawford, G. W., care Thomas Roberts Stevenson Co., Philadelphia, Pa.

Dougherty, Wm., Sales Manager, Consolidated Lamp and Glass Co., 66 West Broadway, New York, N. Y.

Dutton, Nathaniel A., Manager Sales Department, Edw. Miller & Co., 8th and Chestnut Sts., Philadelphia, Pa.

Earnshaw, Warner G., General Sales Manager, Barnes & Tucker Co., 213 Harrison Building, Philadelphia, Pa.

Eisenman, F. N., District Sales Manager, Gulf Refining Co., 110 State St., Boston, Mass.

Flavell, Frank, Secretary, Cruse Kemper Co., 905 Euclid Ave., Ambler, Pa.

Hubbs, John Henry, Assistant Purchasing Agent, The United Gas Improvement Co., Broad and Arch Sts., Philadelphia, Pa.

Leiman, Edw. C., Gas Appl. Manufacturer, 62 John St., New York, N. Y.

Lyon, Edward A., District Sales Manager,-Gulf Refining Co., 814 Battery Park Building, New York, N. Y.

McClellan, John W., Vice-President and General Manager, Manhattan Gas Heating Co., 909 Seventh Ave., New York, N. Y.

Page, Edward, Shipper of Coal and Coke, 2024 New Land Title Building, Philadelphia, Pa.

Peffly, Irvin W., Sales Agent, George M. Clark Co., Div. American Stove Co., 356 Fourth Ave., New York, N. Y.

Reichelm, Paul F., Secretary American Gas Furnace Co., 24 John St., New York, N. Y.

Townsend, Chas. W., Secretary, The Chapin Fulton Mfg. Co., 28 Penn Ave., Pittsburg, Pa.

Williamson, Richard, President R. Williamson Co., 88 West Washington St., Chicago, Ill.

REPORT OF THE TREASURER.

DELAWARE, OHIO, November 16th, 1907.

To the Board of Directors, American Gas Institute.

GENTLEMEN: I have the honor to present herewith the report of the Treasurer for the period between August 31st and November 14th, 1907:

Receipts.

Balance	$ 995.91
Received from Dues	6,880.00
Received from Initiation Fees	665.00
Received from James W. Dunbar, Secretary, Sale of Badges and Proceedings	272.07
Received from American Gas Light Association	798.60
Received from Wm. McDonald, Treasurer Gas Congress	120.41
Total	$9,731.99

Expenditures.

Rent of Office in Engineering Building, two months.	$ 254.00
J. H. Johnston & Son, Badges	241.74
Owens & Phillips, Insurance	14.00
James W. Dunbar, Secretary, Expenses, attending Directors' Meeting	67.25
Stuart Crane, services as Stenographer to the Secretary	100.00
Printing, Stationery, Postage, Supplies, Etc.	203.44
Balance on Hand, as per New York Draft	8,851.56
Total	$9,731.99

Respectfully submitted,

(Signed) T. C. JONES, *Treasurer.*

REPORT OF THE ASSISTANT TREASURER.

NEW YORK, August 31st, 1908.

To the Board of Directors, American Gas Institute.

GENTLEMEN: I have the honor to present herewith the report of the Assistant Treasurer, for the period between November 14th, 1907, and August 31st, 1908:

Receipts.

Balance	$8,851.56
Received from Dues	4,475.00
Received from Initiation Fees	1,115.00
Received from Sale of Badges	288.65
Received from Sale of Proceedings, Etc.	627.07
Received Rebate on Insurance	2.21
Received Interest on Bank Balance	98.73
Received from Western Gas Association	25.90
Total	$15,484.12

Expenditures.

Wrinkle Department	$ 65.05
Storage, Manhattan Company	80.50
Badges	179.00
Office Fixtures	399.96
Gas Educational Fund	350.00
Cost of Printing and Delivering Proceedings	4,574.69
Printing, Stationery and Postage	1,019.23
Rent—Headquarters	1,270.00
Salaries (Including Messrs. Dunbar and Jones)	4,020.00
Stenographers and Clerk Hire	1,024.43
Supplies, Meetings, Express, Freight, Telephones, Etc.	726.51
Petty Cash Balance in hands of West Bissell	25.00
Balance in Columbia Trust Company	1,749.75
Total	$15,484.12

Respectfully submitted,

EMILE GUILLAUDEU,
Assistant Treasurer.

Balance Sheet—Cash Book, from October, 1906, to November 14, 1907. T. C. Jones, ex-Treasurer.

Receipts—Dues and Initiation Fees ...		$17,145.00
Receipts—Miscellaneous		4,462.48
Expenses	$12,755.92	
Cash Turned Over to New Treasurer..	8,851.56	
	$21,607.48	$21,607.48

Balance Sheet—Ledger—August 31st, 1908.

T. C. Jones, ex-Treasurer, Net Expenses.	$8,293.44	
Dues and Initiation Fees		$17,145.00
Dues and Initiation Fees		5,590.00
Western Gas Association		25.90
Wrinkle Department	65.05	
Storage	80.50	
Petty Cash	25.00	
Insurance		2.21
Interest		98.73
Badges		109.65
Office Fixtures	399.96	
Gas Educational Fund	350.00	
Proceedings, Etc.	3,947.62	
Salaries	4,020.00	
Expense	726.51	
Printing, Stationery and Postage	1,019.23	
Rent	1,270.00	
Stenographers and Clerk Hire	1,024.43	
Cash	1,749.75	
	$22,971.49	$22,971.49

(Copy.)

THE BROOKLYN UNION GAS COMPANY.

Brooklyn, N. Y., October 5th, 1908.

(Referring to Report of the Assistant Treasurer.)

To the Board of Directors, American Gas Institute, No. 25 West Thirty-ninth Street, New York.

Gentlemen: Enclosed herewith, please find report of the Assistant Treasurer, for the period from November 14th, 1907, to August 31st, 1908. Your Finance Committee has audited the books, accounts and statements of the Treasurer, and finds the report to be correct. The report consists of two sheets, each having been initialed by the Committee.

Respectfully submitted,

Finance Committee,

(Signed) J. H. Jourdan,

Chairman.

Estimates of Receipts and Expenses From September 1st, 1908, to September 1st, 1909.

Receipts.

Dues, 1215 Active and Associate Members	$12,150.00	
Dues, 92 Junior Members	460.00	
Badges, estimated about 107 Badges at $3.75	400.00	
Interest	125.00	
Sales of Reports and Proceedings, say.	500.00	
Balance	1,749.75	
		$15,384.75

Expenses.

Rent	$1,524.00
Clerical and Stenographers	1,000.00
Stationery, Printing and Postage	1,000.00
Reporting, Publishing and Delivering Annual Proceedings	4,500.00
Directors' Meetings	300.00

Gas Educational Fund	350.00	
Salaries of Secretary and Treasurer .	3,000.00	
Storage	120.00	
Guarantee on Bulletin of Abstracts ..	200.00	
Sundries of General Expenses	1,000.00	
		$12,994.00
Estimated Surplus	2,390.75	

Estimated on present membership, but no allowance made for dues not collectable, which for the past two years have amounted to 10 per cent.

MEMO. OF CASH TO OCTOBER 20TH, 1908.

Balance Sept. 1st, 1908	$1,749.75
Receipts from Sept. 1st, to Oct. 20th, 1908	7,987.59
	$9,737.34
Expenditures from same dates	2,788.42
Balance on hand Oct. 20th, 1908	6,948.92

(Signed) EMILE GUILLAUDEU,
Assistant Treasurer.

REPORT ON BULLETIN OF ABSTRACTS OF THE AMERICAN GAS INSTITUTE TO THE SUBSCRIBERS FOR THE BULLETIN.

Receipts from Sales	$ 7.50	
Receipts from Subscribers to Oct. 20th, 1908	764.20	
Due from Subscribers	750.00	
		$1,521.70
Cost of Printing and Distributing Volume 2 of Bulletin		$1,653.43
Deficit on Volume 2		$ 131.73

NOTE: If the application now pending to admit the Bulletin to the mails as second class mail matter, is granted by the Postoffice, there will be a material saving in postage.

SECRETARY'S BADGE REPORT.

SEPTEMBER, 1st, 1908.

Badges on hand, Sept. 1st, 1907.....	205	
Badges received in Sept., 1907.....	68	273
Badges sold to Nov. 15th, 1907		39
Badges on hand Nov. 15th, 1907.....		234

Received for Sale of Badges.

Balance in hand of Secretary Sept. 1st, 1907	$ 56.42
Sales—39 Badges at $3.75	146.25
Engraving on Badges	1.15
	$203.82

Disbursements.

Remitted to T. C. Jones, Sept. 6th, 1907..	$ 56.42	
Remitted to T. C. Jones, Oct. 30th, 1907 ..	128.65	
Expenses—Registered letters	.10	
Remitted to A. C. Humphreys	18.65	203.82
Badges on hand Nov. 15th, 1907..... 234		
Badges received in Dec., 1907..... 50		
Badges returned by Members resigning 2	284	
Badges sold to Sept. 1st, 1908.....	72	
	214	
In Stock at Headquarters	164	
In Stock at President's Office	50	
	214	

Received from sales of Badges—72 Badges at $3.75. $270.00

Disbursements.

Remitted to E. Guillaudeu, Assistant Treasurer $270.00

Secretary's Report on Volume I.

Proceedings of the American Gas Institute for 1906 Meeting.

Volumes on hand Sept. 1st, 1907		548
Volumes sold	14	
Exchange list	2	
Forwarded to N. Y. Headquarters	532	548

Receipts.

Balance in hands of Secretary, Sept. 1st, 1907	$ 52.00	
Sale of 6 Volumes	49.00	
Sale of 8 Volumes	40.00	
Sale of 1 set of Abstracts	1.00	
	$142.00	$142.00

Disbursements.

Sept. 6th, 1907—Remitted to T. C. Jones, Treasurer	$ 61.00	
Oct. 30th, 1907—Remitted to T. C. Jones Treasurer	26.00	
Dec. 26th, 1907—Balance remitted to A. C. Humphreys	55.00	
	$142.00	$142.00

Volumes on hand Nov. 30th, 1907		532
Sent to Members	2	
Exchange list	24	
Sold	14	
Volumes on hand Sept. 1st, 1908	492	
		532

Receipts.

Sales of 14 Volumes ..... $ 82.60

Disbursements.

Remitted to E. Guillaudeu, Assistant Treasurer .... $ 82.60

SECRETARY'S REPORT ON VOLUME 2.

PROCEEDINGS OF THE AMERICAN GAS INSTITUTE, 1907 MEETING.

SEPTEMBER 1st, 1908.

Volumes received from the Printer		1525
Volumes sent to Members	1171	
Volumes sent to exchanges	57	
Volumes sold	10	
Volumes on hand	287	
		1525

Receipts.

Sales of 10 Volumes	$ 68.20
Due from Sundry creditors	10.00
	$ 78.20

Disbursements.

Remitted to E. Guillaudeu, Assistant Treasurer .... $ 68.20

SECRETARY'S REPORT ON SALES OF OTHER PUBLICATIONS.

SEPTEMBER 1st, 1908.

Sold.—Electrolysis Reports	$ 12.00	
Abstracts, 1906	4.00	
Report on Pipe Standards	7.50	
A. G. L. A. Proceedings and Papers	174.90	
W. G. A. Proceedings and Papers .	46.00	
Ohio Proceedings and Papers	17.50	
Reports on Uniform Acc'ts (1902).	140.00	
Proceedings—Gas Congress	8.25	
Blue Book on Electrolysis	8.00	
A. G. I. Papers	8.15	
A. G. I. Distribution Report ('06) ..	6.75	
	$433.05	
Remitted to E. Guillaudeu, Asst. Treasurer.		$398.30
Due from Sundry Creditors		34.75
		$433.05

RECOMMENDATIONS.

Special Reports of the Sub-Committee of the Technical Committee.

The reports of the Committees on Calorimetry, Uniform System of Accounting, Pipe Standards, Electrolysis and Unit of Light, the Report of the Bureau of Information, the Report of the Proceedings of International Committee for Standardization of Threads for Gas Appliances, the Report of the Board of Revision of the Question Box and "Wrinkles" have been accepted by the Technical Committee and presented by this committee to the Board of Directors, together with the resolution, in each case giving the necessary effect to the respective reports. These resolutions will be presented by the Secretary in the proper order.

The Board recommends the acceptance of all the above reports, and the passage of the respective resolutions by the Institute.

Trustees Gas Educational Fund.

The annual report of the Trustees Gas Educational Fund will be presented, at this meeting, to the Institute as one of the subscribers to the fund.

The Board recommends that the Institute continue its annual subscription of $350.00 to the Trustees Gas Educational Fund. The Board has also decided that in the forthcoming volume of the Proceedings, there be printed such of the questions and answers as have not been already printed in the first two volumes of the Institute Proceedings.

Appliance and Apparatus Exhibition.

In view of the action taken this year with reference to the Exhibition of Appliances and Apparatus as previously referred to, the Board recommends that the question of an exhibition at the next annual meeting of the Institute be left for the Directors to decide when in possession of the facts as to the outcome of the joint exhibition to be held in Chicago next December.

Definition of Heating Value.

The Directors having appointed a special committee to consider the question of definition of heating value, and having adopted the report of that committee, now recommend this definition for final adoption by the Institute.

The heating value of a gas is the total heating effect produced by the complete combustion of the gas with air of the same temperature, the products of combustion being brought to the initial temperature of the gas and air. We recommend that the heating value be stated in terms of British Thermal Units per cubic foot.

Conservation League of America.

A communication being laid before the Board from the Conservation League of America, asking for the support of the Institute of the work undertaken by the league, the Board recommends that the Institute express its sympathy with the league in its efforts to conserve the national resources of the nation, and that a committee of the Institute consisting of the President and two Vice-Presidents, be appointed to confer with the officers of the league as to the question of the Institute co-operating in this work.

Proposed Amendments to Constitution.

The Board recommends the following amendments to the Constitution:

Section 53. On Publication Committee, strike out the words "The President, the Vice-Presidents and the Chairmen of the Two General Committees," and substitute therefor the words "The President, the Junior Past President, the First Vice-President, the Junior Past Chairmen of the two General Committees and the Secretary."

The purpose of this proposed amendment is to place upon those responsible for the work, covered by the proceedings, the duty in part of supervising the publication of the reports on that work.

Section 48. After the words "All questions," insert the words "Except as otherwise provided in Sections 9, 20, 28, 49

and 57." This addition is proposed as a necessary qualification in view of the provisions of the sections referred to.

Section 37. Strike out the word "or" in the fourth line and substitute the word "and," so as to read "pay all bills approved by the President *and* a member of the Finance Committee." This is proposed for the purpose of having an agreement with By-Law No. 19, which calls for approval of bills by the President *and* a member of the Finance Committee.

Section 31. After the words "Active members," on the fifth line, insert the words "and Directors." This is proposed to make it plain that the Nominating Committee is to recommend a full ticket, distinguishing Directors from Officers, as is done in Section 27.

All of which is respectfully submitted for the Board of Directors.

ALEX. C. HUMPHREYS,
President.

JAMES W. DUNBAR,
Secretary and Treasurer.

THE PRESIDENT: You have heard the report of the Directors. What is your pleasure? I suggest that it be accepted and ordered to be printed as usual, and that then we proceed to take up the recommendations for action.

MR. BAEHR: Mr. President, I make a motion to that effect.

The motion was seconded, and carried.

THE PRESIDENT: Almost all the recommendations can be taken up by open vote. The first recommends the acceptance of the above report and the passage of the respective resolutions by the Institute, namely, as to the special reports of the sub-committees of the Technical Committee. We will, however, let that rest as to the special acceptances, as they can come up in connection with each subject as brought before the Institute.

The next recommendation is as to the subscription to the Gas Educational Trustees, of $350. It will need a special resolution from the Institute to approve that subscription.

MR. A. S. MILLER: I move that the subscription be continued for the further period of five years at the same rate.

The motion was seconded.

THE PRESIDENT: I am a little in doubt as to whether we have the right to bind the Institute for five years. Mr. Miller undoubtedly makes the motion because that is the practice with all other subscribers.

MR. DONALD MCDONALD, of Louisville, Ky.: I move to amend Mr. Miller's motion by substituting one year for five.

THE PRESIDENT: Will that be acceptable to Mr. Miller? I am a little in doubt.

MR. MILLER: The subscription before was made for five years. No question was ever raised. If the President is not satisfied with five, I accept one.

MR. DONALD MCDONALD: This is the first time that the question was ever brought up in our Institute. We have not been in existence five years.

MR. R. M. SEARLE: There can be no objection to passing it for five years if the Institute agrees to it.

THE PRESIDENT: Is there any further debate? The question is on the amendment if Mr. Donald McDonald's motion to amend it was seconded.

MR. DONALD MCDONALD: It was seconded, and it seems to me that from year to year is long enough to make such a subscription. Next year we may want to increase it, or circumstances may occur where the Institute would rather discontinue it. I think one year is sufficient.

THE PRESIDENT: I think the argument is an excellent one, that we may want to increase it. Are you ready for the question on the amendment?

The question is called for.

THE PRESIDENT: All in favor of amending the resolution to confine the subscription to one year will please say aye. Contrary-minded, no.

There were some votes in the negative.

THE PRESIDENT: All in favor of amending the resolution will raise their hands.

Various delegates raised their hands, and were counted by the President.

THE PRESIDENT: Those contrary.

Various delegates raised their hands, and were counted by the President.

THE PRESIDENT: Sixty-one in favor and forty-three in the negative. The amendment is carried. Are you ready for the question as amended? All in favor of subscribing $350 to the work of the Gas Educational Fund for the coming year will please say aye. Contrary, no.

The motion was carried.

THE PRESIDENT: The Board recommends that the question of exhibition at the next annual meeting of the Institute be left to the Directors to decide when in possession of the facts as to the outcome of the joint exhibition to be held in Chicago next December. A motion to approve that recommendation of the Board of Directors is in order.

MR. A. E. FORSTALL: I move that the recommendation of the Board be adopted by the Institute.

The motion was seconded, and carried.

THE PRESIDENT: *Definition of Heating Value.* You have heard the recommendation of the Committee, approved by the Directors, and now referred to the Institute for final adoption. Do you wish to have the definition re-read?

MR. DONALD MCDONALD, of Louisville, Ky.: I suggest that it be re-read.

THE PRESIDENT: (Reading.) "The heating value of a gas is the total heating effect produced by the complete combustion of the gas with air of the same temperature, the products of combustion being brought to the initial temperature of the gas and air. We recommend that the

heating value be stated in terms of British Thermal Units per cubic foot."

MR. DONALD MCDONALD: I move the adoption of that.

The motion was seconded.

MR. CARL H. GRAF: I should like to inquire, Mr. Chairman, whether the idea is that we do away with the terms net and gross?

THE PRESIDENT: I will ask the Committee to report on that.

MR. WALTON CLARK: The Committee understand that the language that they have used describes the total heating value of gas. The Committee do not recognize that there is any net and gross, but if there is any net and gross, then this is gross.

THE PRESIDENT: I would state also for Mr. Graf's information that I think this will be made clear in the further proceedings of the Institute.

MR. FREDERICK N. MORTON: Mr. Chairman, it seems to me that there is a question as to the standard temperature. In the gas business we always assume the standard temperature at 60 degrees, in Europe it is 32 degrees, while in other professions they use 62 degrees. Now we may take a cubic foot of gas at any one of the three temperatures. Then there is another question comes up: that is, we deliver our gas in various ways. The people in the outskirts of a district may get dry gas, while people near the mains will get it charged with water. It seems to me this ought at least to be considered.

MR. DONALD MCDONALD: I move that the definition be amended so as to say that the air and gas shall be at 60 degrees temperature. That does away with the question as to whether or not the vapor produced by combustion will be condensed. If the definition only says that the air and gas shall be at the same temperature, they might be at a temperature of 300 degrees Fahrenheit and none of the vapor condense, and

there will be quite a difference between the net and the gross.

MR. ROLLIN NORRIS: I would like to ask the Committee whether there would be any objection to adding to that last sentence of the definition that the cubic foot be at 60 degrees Fahrenheit and 30 inches of mercury.

MR. WALTON CLARK: I see no objection to it, but I am a little afraid to accept any suggestion of change on the spur of the moment. This was worked out pretty carefully and a long time given to it, and one of these gentlemen who have been speaking on the point had a hand in the preparation of the definition. I would suggest, if the Institute is not satisfied with that definition, that they put it back to the Committee. This is a vastly important matter. I do not think we ought to attempt to define the heating value of gas on this floor.

MR. DONALD MCDONALD: I move that it be referred back to the Committee with a request to report again at this meeting of the Institute.

The motion was seconded.

MR. WALTON CLARK: If it is to come back to the Committee for report at this meeting of the Institute we want to know what modification this Institute expects. We must know, though it may be that the Committee will stand on its definition—as it has a right to do—and put it up to the Institute to adopt or not as it chooses, but what is the use of our going back and going over it again—to come back here to satisfy a want that we know exists but of which we have no definition? This Institute should tell us in what direction they would like to have this definition changed when they put it back to us.

MR. H. RUSSELL: It seems to me that the definition as given is correct. The question for the Institute to determine is what is the cubic foot of gas. I do not think it is necessary to refer to the old definition of heating value, but rather we should submit what is a cubic foot of gas.

Mr. Donald McDonald: There is no ambiguity as to what is the cubic foot of gas. Everybody understands that to be a cubic foot at 60 degrees temperature and 30 inches of mercury; but when you say that the gas and the air shall be at the same temperature—unless you say what that temperature is—there will be a very decided difference in the heating value produced, because at temperatures above 212 the vapor will not be condensed, and at a temperature of 60 degrees the vapor will be condensed. The only object is to get a definition which cannot be misunderstood. At present it seems to me there is ambiguity in the definition proposed by the Committee and it is to remove that ambiguity that I moved that it be referred back to the Committee, and for no other reason.

The President: We have a very heavy program before us. I entirely agree with Mr. Clark that this is no place or time to take up a matter of this importance. It has got to be very carefully drawn, to give the exact meaning, the exact expression of the intended meaning. I think that it ought to be referred back to the Committee and I should like to ask if Mr. Clark has not now sufficient information as to what is in the mind of the members, to guide him in considering the questions that have been raised?

Mr. Walton Clark: Mr. President, I think that the Committee can now come back with a definition. It may be the same definition, but if it is, it will be accompanied by an explanation that will cover the point of objection. I think we have all the information we want. Mr. Doherty is here, he is the only other member of the Committee present so far as I know.

Mr. J. M. Morehead: Would it not be well to incorporate in there just what the British Thermal Unit is? It says it shall be the "British Thermal Unit," but now if you give these directions, you would have to look up another book to find out what the British Thermal Unit is. The definition is rather short and I should like to suggest that that be put in. Then we don't have to go back to some other reference

book to see what it is. The definition would then be complete in itself.

Mr. H. L. Doherty: I do not believe that it is possible for the Committee to accompany this report with a dictionary. Ordinances may specify what shall constitute a cubic foot of gas, because you can assume a cubic foot of gas shall be at zero centigrade and 760 millimeters of mercury or at 60 degrees Fahrenheit and 30 inches of mercury. The only difference, I think, is simply that between 32 degrees and 60 degrees, a difference of 28 degrees on the Fahrenheit scale. The lower the temperature at which the measurement is made the higher will be the apparent heating value of the gas. We were trying to get a concise definition, which as far as we know to-day does not exist, on the record, and we wanted to relieve it as far as possible of all other matters not strictly related to the heating value of gas. Now when we start to define what a British Thermal Unit is, or when we start to define what a cubic foot of gas is, we may run counter to other definitions, and it is not within the province of this Committee to define either one.

Mr. Paul Doty: I suggest that the Committee may be willing to announce the time and place of a hearing on the various objections or additions that may be desired to be presented to the Committee. It will save the Institute's time if the matter is referred back to the Committee and a hearing given.

Mr. Walton Clark: I think that is an excellent idea. I will consult with Mr. Doherty and Mr. Prichard, if the latter is in the room, he being also a member of the Committee, and we will try to arrange a time and place for hearing.

The President: Hearings are very much in order at present, so I think it is a good suggestion.

Mr. S. P. Cobb: I am told that the Gas Power Section of the American Society of Mechanical Engineers at present are considering this very thing and it seems to me that it

might be well, when the matter is referred back to the Committee, that they should co-operate with the Society of Mechanical Engineers, in order that the definition accepted by both Societies shall be uniform.

THE PRESIDENT: The motion is to refer this back to the Committee for them to report at this meeting—not at this session of this meeting. That is the motion that is made.

MR. R. M. SEARLE: I believe Mr. Doherty is President of that Society, so he is qualified to act on both Committees.

THE PRESIDENT: All in favor of the motion will say aye. It is carried and referred back to the Committee for report again at this meeting, if possible.

The next recommendation is in regard to the Conservation League of America. I suppose all you men know what they have been doing in Washington in that regard. The body is headed by our President, with two would-be Presidents associated with him. The recommendation is that we express our sympathy with this movement and that a Committee of the Institute, consisting of the President and two Vice-Presidents, be appointed to confer with the officers of the League as to the question of the Institute co-operating in this work. The recommendation was that we should pass a certain resolution which was offered to us to pass. Are you ready for the question of adoption?

MR. DOTY: I move the adoption of the recommendation.
The motion was seconded.

THE PRESIDENT: It is moved and seconded that this recommendation of the Board of Directors be adopted. Are you ready for the question?

The question was called for and on being put to a vote was carried.

THE PRESIDENT: We now come to the proposed amendments to the Constitution and that business will have to be attended to through a ballot. Now, according to By-Law 13, it is the duty of the President to appoint three tellers of election. That of course primarily refers to election for officers, but

we might as well have these same men serve for any ballot that may have to be taken, and I will appoint that Committee of Tellers and ask them to serve if a ballot is to be taken in full form. I appoint as tellers of election for this meeting: Messrs. A. E. Forstall, C. A. Learned and C. L. Day.

Now the recommendations as to amendments to the Constitution, I presume, I had better place before you again. The first is, on Section 53, to strike out "the President, the Vice-Presidents and the Chairmen of the two general committees as a Publication Committee," and to substitute therefor "the President, the Junior Past President, the First Vice-President, the Junior Past Chairmen of the two general committees and the Secretary." The purpose of this proposed amendment is to place upon those responsible for the work covered by the proceedings, the duty in part, of supervising the publication of the reports on that work. Are there any objections to the passage of this amendment to the Constitution? If there are, a single objection rules it out of order. Otherwise the ballot can be taken by requesting the Secretary to deposit one ballot to express the will of the Institute. Are there any objections? Will some one make a motion to so instruct the Secretary?

Mr. A. S. Miller: I move that the Secretary cast one ballot for this amendment.

The motion was seconded.

The President: A motion is made that the Secretary cast one ballot as the expression of the unanimous opinion of this body in favor of the proposed amendment—one vote in the negative rules it out. All in favor will say aye. Contrary-minded, no. I hear no negative and the Secretary will cast the ballot.

Mr. James W. Dunbar: Mr. President, in accordance with the unanimous vote of the members here assembled, I cast a ballot in favor of the proposed amendment to the Constitution.

MR. A. E. FORSTALL: As Chairman of the Board of Tellers I report that the ballot of the Secretary has been received in favor of the adoption of the amendment as read.

THE PRESIDENT: You have heard the report of the tellers on the action taken by Mr. Dunbar, and therefore this amendment to the Constitution has been passed.

Next, Section 48. If you have not the Section in mind, I would remind you that it states that all questions can be decided by open voting; the proposition is to insert after the words, "all questions," the words, "except as otherwise provided in Sections 9, 20, 28, 49 and 57." This addition is proposed as a necessary qualification in view of the provisions of the sections referred to. Are there any objections to the passage of that amendment? If not, a motion will be in order in the same form. A single objection rules it out of order.

MR. DOHERTY: I move that the Secretary be instructed to cast a favorable ballot.

The motion was seconded.

THE PRESIDENT: One objection rules it out. All in favor will please say aye. Contrary, no. I hear no objection. The Secretary will please proceed.

MR. DUNBAR: I cast the unanimous vote of this association in favor of the amendment just read, to the Constitution.

MR. A. E. FORSTALL: I receive the vote, if the stenographer will please make the necessary notation.

THE PRESIDENT: The proper notice has been taken of the vote and the amendment has been attended to.

Section 37. Strike out the word "or" in the fourth line and substitute the word "and." This is simply to make the provision in the Constitution agree with the provision in the By-Laws, which stipulate that bills shall be paid upon the approval of both the President and a member of the Finance

Committee. That is all that is for. What do you wish to do with it?

Mr. E. G. Cowdery: Mr. President, I move you that the Secretary cast the ballot of the association in favor of the proposed amendment.

The motion was seconded.

The President: It has been moved and seconded that the Secretary cast one ballot in favor of this amendment. One objection rules it out of order; all in favor say aye. Contrary, no. I hear no objection.

Mr. Dunbar: In accordance with the instructions, I cast the unanimous vote of the members of the American Gas Institute in favor of striking out the word "or" and substituting the word "and" in the Section of the Constitution just read.

Mr. A. E. Forstall: As Chairman of the Board of Tellers I report that the ballot of the Secretary has been received in favor of the adoption of the amendment as read.

The President: I have your report. Thank you. The amendment is carried.

Section 31. After the words "active members" in the fifth line insert the words "and directors." This is proposed to make it plain that the nominating committee is to recommend a full ticket, distinguishing directors from officers, as is done in Section 27.

Mr. Donald McDonald: I move its adoption.

The motion was seconded.

The President: It is proposed that the Secretary in this case cast the ballot of the association in favor of this amendment. All in favor say aye. Contrary, no. One objection rules it out. No objection, Mr. Secretary.

Mr. Dunbar: I cast the unanimous vote of the members of the association in favor of the amendment to the Constitution just read.

The President: Thank you.

MR. A. E. FORSTALL: As Chairman of the Board of Tellers I report that the ballot of the Secretary has been received in favor of the adoption of the amendment as read.

THE PRESIDENT: Announcement is made by the tellers and I declare the amendment is passed.

That completes the work with regard to the Directors' report, except the individual resolutions that will be brought out in connection with the reading of the papers and reports.

PRESIDENT'S ADDRESS.

The next business in order is the reading of the President's address.

The President then read his address as follows:

Custom has so run for years that it has now become a specified requirement in most organizations such as this that their conventions shall be opened by the delivery of a formal address by the presiding officer. In meeting this requirement the general practice has been for the presiding officer to consider some special technical question then prominent in the minds of his associates, or to submit a general resume of the year's progress in the field concerned.

In the address delivered before this Institute last year, President Clark, while considering some questions of general interest to those connected with the gas industry, chiefly concerned himself with the direct responsibilities of this Institute, especially the responsibility which it assumed when it, with its more complex and ambitious scheme of organization, was brought into life at the cost of destroying the American, Western and Ohio Gas Association which, through the operation of their simpler and less pretentious schemes of organization, had proved their worth and capacity for service to the industry and the public.

In that address, we were forcefully shown that to adequately meet this particular responsibility, we must demonstrate by our course in administering the affairs of this Institute that the industry and the public had definitely profited by the amalgamation.

In what I am about to say, I shall follow the example of my predecessor in office chiefly for two reasons:

First.—The technical programme for this meeting is of such a character that I feel no special responsibility in that line in connection with my address.

Second.—Although the preparations for, and the conduct of, last year's meeting were of a character to reflect credit upon any such institution as this, and although the work of the past year, as carried on by the several committees in charge, will, in the proceedings about to follow, be shown to compare favorably with the work done by other technical societies, I feel, in the words of President Clark, that still "the burden of proof is heavy upon us."

To-day the matter of vital importance to this Institute is not to be found in any technical questions, however important, but it is to be found in the questions involved in the conduct of the internal affairs of the Institute.

There is a special necessity to-day for the establishment and recognition from the outside of an organization entitled to speak on behalf of our industry with the voice of authority. It should be the definite purpose of this Institute to deserve recognition as—again quoting President Clark—"the authority in the United States on all questions relating to the manufacture, distribution and utilization of gas, including the keeping of accounts, and the relations between gas companies and consumers, and gas companies and the City and the State."

It is not difficult to understand or believe that the American Gas Institute, carrying upon its roll of membership the representatives of the great majority of the gas companies of the United States and not a few from other countries, can through the exercise of a broad, fair, mutually loyal and efficient scheme of operation, so establish itself as the authority in the gas business, that where, in isolated cases, there may be a tendency on the part of some companies to adopt a policy at once unfair to the public and harmful to the industry as a whole, the pronouncements of this Institute may serve to check or correct such a tendency.

We cannot shut our eyes to the fact that the public and its legislative and executive representatives in the Federal and State Governments have decided that public service corporations must conduct their affairs in accordance with some scheme, more or less developed, of uniform operation and control. The more we control ourselves along lines uniform as to wise and efficient practice, the less ground there will be for the development of such extreme schemes of control as we now see exemplified in the operation of State Commissions.

Certainly we are not yet prepared to acknowledge that control of public service corporations, along the lines of late put into effect in certain States, is likely to operate to the ultimate advantage of the industries concerned or the country at large.

There is one grave fundamental weakness in government by commission which must cause all of us deep concern quite apart from our special interest as industrial managers. I refer to the fact that the present tendency is to cover in the same persons, the members of the State Commissions, the legislative, executive and judicial functions, which, according to our republican form of government, should be carefully separated and held apart. So impressed am I with the radical nature of this weakness that I am prepared deliberately to express the opinion that, if this form of control is allowed to develop along these lines, then this is the beginning of the end of our form of government. If we are to continue the form of government laid down by the fathers and developed through the succeeding years of trial and test, we must be as vigilant to prevent the control of a bureaucracy as the control of a plutocracy. Let us hope that we can discern a more sane tendency in this connection since our last meeting, and that it is coming to be recognized that these commissions, if they are to continue for the good of the country at large, as they well may, must be limited as to function and authority.

We are forced to acknowledge that in the interest of efficiency there is an apparent demand here, as elsewhere, for concentration of control. But here, as in every other department of

human effort, if theory is to be realized in practice, the theory must be complete and must include a recognition in its terms of all the general and special conditions necessarily to be met in applying the original and undeveloped theory.

One general condition to be considered is that the members of a commission cannot possibly obtain such an intimate knowledge of the theory and practice involved in all the public utilities placed under their authority as to warrant them in exercising absolute and unlimited control. Another important condition is that no so-called uniform scheme of control and management can possibly be made to apply equally and fairly to all the companies even of a single State, if for no other reason than the variation in local conditions.

For instance, it is highly important that every effort should be made to establish and maintain a uniform system of accounting, but the person or the organization which assumes that any such scheme, no matter how skilfully devised, can be made to operate automatically in all cases and without need for special adjustment and explanation in individual cases, will learn their error through convincing experience.

Unfortunately we have an example of this lack of practical experience, coupled perhaps with an over-developed desire to exercise all the powers conferred, or sought to be conferred, by the Legislature, in the form of a report for the half year ending December 31, 1907, issued to the gas companies by the New York Public Service Commission, First District. It would be interesting and instructive to all concerned to see how the Statisticians of the Commission would themselves undertake the task of compliance with this demand if they were placed on the other side of the problem, and also what would be the additional expense of operation by reason of compliance with these unreasonable and, in many features, useless requirements.

Some of the questions involved in government by commission can be answered from the experience so far gained. Of the State Commissions now exercising control over our business, only the Massachusetts Commission has been in existence for any considerable number of years. It is to be particularly noted that this Commission has not been

authorized, nor has the majority of its members generally shown a disposition, to exercise the same measure of administrative control which has marked the course of the other State Commissions. In my opinion, the fact that the Massachusetts Commission is to-day in existence can be attributed to this very difference.

Our companies have continually been put on the defensive by actual and threatened antagonistic legislative action—State and municipal.

Fortunately, the State Legislatures are not continuously in session, and even while in session the legislators are unable to devote their entire attention to the public service corporations. Unfortunately, the public utilities commissions are always open to complaints against these corporations, and are governed by laws which practically offer an invitation to all wishing to complain, an invitation which the yellow journals, using as their tools the chronic objectors and professional reformers, who, like the poor, are always with us, accept as their selfish purposes suggest.

I speak well within bounds when I say that, in some cases, Commissioners have acted as prosecutors rather than judges—no attempt being made to hold the scales of justice even, but rather to find sufficient plausible testimony upon which to base a decision against the Company in response to public clamor.

I am not laying the blame for all cause for just complaint upon the members of the Commissions. The laws under which they operate have not infrequently necessarily led to vicious results. Much could be said in this connection, but I will only take the time to refer to one provision of the Wisconsin law governing the Public Utilities Commission of that State, unwisely taken as a pattern in other States. It reads as follows:

"No public utility shall keep any books, accounts, papers or records of the business transacted than those prescribed or approved by the Commission."

Some of the ardent reformers of the New York Legislature thought this was a wise provision as far as it went, but that it should go farther; so, as part of a great mass of legislation

proposed at last session, we find in Senate Bill No. 911, the following:

"Where the Commission has prescribed the forms of accounts, records and *memoranda* to be kept by said persons, corporations or municipalities, it shall be unlawful for them to keep any accounts, records or memoranda than those so prescribed."

Fortunately this New York Bill and much more of the same mischievous character failed of passage.

These cases of unwise legislative effort may not seem to be serious, especially by comparison with much else that could be cited. But, it appears to me, this serves as a perfect example of the desire on the part of some of our legislators to establish such a measure of control over the public service corporations as would prevent those responsible from exercising to the full their ability and capacity as industrial managers, for the benefit of the public and of their employers whose investments are at stake.

In Wisconsin, the companies are prohibited from using any books, accounts, papers or records not authorized by the Commission, no matter how necessary it may appear to the manager of a property to use some particular form of record to meet some particular case. In New York, if the law referred to had passed, not even memoranda could have been lawfully made unless the Commission had first approved. Especially to those of us who have been responsible for uniform management of a number of properties, calling for constant change and development of forms of blanks and records, and the temporary and immediate use of a memoranda to meet special cases, such a measure of interference spells nothing less than tyranny. This is as far as the principle is concerned; in practice, it is fortunate that the Wisconsin Commission has given evidence of an earnest desire to deal justly, sensibly and fearlessly with the problems placed before them; and we may hope that New York and other States, while hesitating to follow the lead of Wisconsin's legislators, may emulate the fair practice of Wisconsin's Commissioners.

We may congratulate ourselves that during the past year there has been some change for the better in the attitude of

the public and its governmental representatives with regard to control of public service corporations. The indiscreet amateur reformer, the over-confident professor of economics and the blatant demagogue are not so firmly in the saddle as they were a year ago.

In this State an encouraging comparison can be made between the late Commission of Gas and Electricity and its successor in the district outside of New York City, the present Public Service Commission, Second District. I make the comparison with the No. 2 Commission because I happen to have had opportunities to make the necessary observations in connection with matters outside the jurisdiction of Commission No. 1.

The late New York Commission made a record which went far to discredit Government by Commission. The successor of this Commission in District No. 2 has demonstrated how much depends upon the personnel in this scheme of control. The members of this Commission have shown not only a desire, but a determination to deal justly in the cases brought before them; and they have indicated that they appreciate that no matter what authority may be conferred upon them by the law makers, they, as individuals, cannot expect, in the time at their disposal, to qualify as experts in all the industrial branches included in their province.

Here in this comparison we have an opportunity to see how much depends upon the character of the men selected to fill these offices. But if the scheme as a whole is dangerous in principle, we must favor its modification, even though the evils may be minimized temporarily by the wise course followed by the men in office. Sooner or later, if there is the opportunity for unjust and ruinous control to exist and grow, the men to take advantage of such a condition surely will be found in office.

In the meantime, we should strive wisely, continuously, strenuously to so build up this Institute as an authority that we can exert a wholesome influence with the Commissions as they now exist, and also be in a position to convince the public and the public's servants that no such measure as extreme control through Commissions as is now advocated,

and was still more strenuously advocated a year ago, is to the interest of the country at large.

In considering the disadvantages of Commission control, we must not lose sight of the advantages. To every question there are two sides.

One of the evils with which this country has been threatened is Municipal Ownership. We might well expect that the municipal ownership propaganda would make little progress in connection with Commission control for, if these commissions collect their data even according to such a scheme of uniformity as is possible, the result should be to defer the establishment of municipal ownership in this country until we had at least made considerably more progress in the direction of the millenium.

In passing, let me say that we have another protection against municipal ownership in the report of the Commission appointed by the Civic Federation. This matter also was referred to in President Clark's address, but since our last meeting there have been developments in this connection which are of great interest. I earnestly advise you one and all to study the record of the investigation and, especially, to study the individual analyses of that record, two on each branch of the investigation, one by the advocate of municipal trading and one by its opponent.

Before accepting the matter presented by the Municipal Ownership labor investigator, I particularly advise you to read a recently published supplemental analysis of the labor report written by Mr. J. W. Sullivan, the other labor investigator. Furthermore, there is reason to believe that some of those quoted and relied upon as witnesses in the analyses written by the municipal ownership advocates are preparing statements to show that they have been misquoted and misinterpreted. I advise you to be on the lookout for these supplemental papers.

In studying this report, it may well be borne in mind that the municipal ownership advocates were given more than fair play in the gathering of data and the preparation of the reports and analyses; and still, with the advantages conceded to them by their associates representing private ownership and

the further advantages seized by them, the final report of the majority, as signed by these municipal ownership advocates, "makes no claim that municipal ownership of gas, electric light or railways ever has been or ever will be beneficial to the consumer or the taxpayer."

No man interested in the question of municipal ownership of public utilities can afford to ignore this report, including its accompanying papers, present and prospective. Especially should the final report of the majority be studied in connection with the uncompromising and convincing minority report.

Time does not now permit anything approaching an exhaustive discussion of government by Commission and municipal ownership. I have been led to touch upon these questions chiefly that I might re-enforce and emphasize the point as made in last year's presidential address that it behooves the Institute constantly to keep in mind the peculiar responsibility resting upon it to establish itself firmly as the authority to be reckoned with in the consideration of all questions pertaining to the gas industry.

Now let me briefly refer to a few of the matters which have, during the year of my presidency, forced themselves upon my attention in this connection.

I shall speak as frankly as I consider the case warrants and I ask for your indulgence in so doing.

We must conduct this Institute so as to appeal to the proprietors and managers of the small undertakings as well as those of the largest undertakings. We must not lose sight of the apparently simpler problems while laboring over the more complex and advanced problems. We must carry on our work between our annual conventions, and conduct our meetings so as not to discourage the younger men and the men in charge of smaller properties from presenting for investigation and discussion their particular problems and difficulties.

We must remember that, while there is and will be constant necessity for research, the engineer and manager must be, first of all, commercially practical in the application of the results of scientific research. We must remember that the engineer is more the applier of science than he is the scientist.

We must of necessity conduct a large and complex organization like ours through a few men selected each year from the membership at large, and naturally the men so selected will, as a rule, be chosen from those who have gained some prominence in the industry or in our meetings. But it is for these men to do all in their power to encourage those not so well known to come forward with their questions and suggestions, and to so enlarge the working units of the organization until the roll of workers shall include all of those willing and able to do more than sit still and profit by the labor of others.

New blood must be constantly brought into the working body of the Institute and the men who can supply new blood of the required quality must be encouraged to show their quality.

On the other hand, in carrying on our work, we must recognize the advantages to be gained by availing ourselves of the facilities and instrumentalities within the command of the larger separate companies and the parent corporations operating many companies, but beyond the reach of the smaller separate companies. And those not connected with these more powerful corporations may well be grateful for the benefits so obtained and thus be moved to make greater exertions in the effort to do their share of the work, the responsibility for which rests upon all.

By some of our members, these more powerful corporations have been criticized for the active part taken in this Institute and the associations which preceded it. Rather should we not all be grateful for the efficient service rendered by the representatives of these corporations? Most of these larger corporations contribute through their representatives far more than they receive. If they elected to pursue such a narrow and selfish policy, they could confine their researches and discussions to their own meetings of engineers and managers and so deprive the gas industry at large of much valuable information—information which, in many cases, has been collected at great cost. Where so much is contributed, it is natural and right that those who so contribute should be

influential in determining the Institute's policies and methods of procedure.

To illustrate the points just made and to re-enforce my appeal for a more general distribution of the work of the Institute, let me give you the result of an analysis of the papers, reports and short topics presented at the meetings of the American Gas Association and this Institute between the years 1895 and 1907. The total number of such offerings was 114, out of which the representatives of one powerful corporation and its associated interests presented 34, and the representatives of another powerful concern presented 16, a total of 50; or nearly fifty per cent. of the total contributions presented by the representatives of two interests.

To show that where there is the inclination, the members not connected with these more powerful interests can do their share, I may mention that the representatives of one concern not so connected contributed 12 of the remaining 64 contributions.

Now let us consider the list of papers prepared for this meeting. Of the ten regular papers, eight have been prepared by men connected with one corporation, and in the general reports and special reports of the sub-committees of the Technical Committee, the same corporation is fully represented.

Do not misunderstand me—I am not minimizing the efforts of the others who have done such splendid work in past years and in preparing for this meeting, but I am making the point that those who have not been workers in the past should recognize the unselfish spirit in which these great corporations assist us through their representatives and the instrumentalities at their command, and then resolve that they will give expression to this appreciation by doing their share in turn, even if individually they are able to do what to them seems little by comparison.

It may be urged that more papers could be obtained from the membership at large if greater effort were made by those directing the work. As far as my experience goes, such effort is made every year, but, by reason of the insufficient response made from other quarters, those carrying the responsibility are obliged to fall back upon the representatives

of these larger corporations. This emphatically was the case this year.

A certain definite complaint was made to me this year, shortly after my election, to the effect that the representatives of the smaller companies were not encouraged to contribute to our meetings and their needs were not sufficiently kept in mind. I cannot acknowledge the justice of this complaint as to the past, and it certainly cannot be maintained as to this meeting, for it will be seen that a number of the papers prepared for this meeting are of equal interest to the smaller companies as to the larger ones. While some of the papers stand upon a high plane technically, others are of such a practical character that not a member of this Institute can fairly complain that theory is placed ahead of practice. But most of these papers had to be prepared by the representatives of one of these large corporations, as already shown. One gentleman who voiced this complaint was urged to submit a contribution along the lines he suggested, but he declined as did others who were approached.

We must so conduct this Institute as to win and hold the confidence and support of the more powerful corporations represented in our membership. This Institute cannot hope to be a representative body without their support. In spite of opinions to the contrary, I believe that this support can be best retained by inducing the members other than the representatives of these interests to do their full share in the work of the Institute.

There is the opportunity for nice discrimination in connection with questions that must constantly arise as to the scope of this Institute's activities. Certainly our transactions should constantly enrich the literature of our industry, and we should develop a system of reference which would serve to make more and more readily available to our members the literature of the industry, past, present and future. We should aim to build up a reference system that will be available for our members in connection with questions involving our relations with governing bodies. But having thus helped our members to acquire the necessary general information, the Institute's officers should not be required to apply this information to

the solution of any particular problem requiring for the purpose a detailed study of all local conditions. Here is where the work of the Question Box and the Bureau of Information could be readily extended beyond their legitimate territory.

Manifestly no company and no officer of a company can fairly expect to have local and individual problems solved for them for a yearly fee of $10.

We must be prompt to recognize where our methods of procedure are inefficient and we must be untiring in our efforts to discover and apply the required corrections.

In connection with affiliation and sectional sessions, there are problems yet to be solved which will require, for their solution, the exercise in large measure of patience, open-mindedness and common sense. If we are to succeed in developing a working scheme of affiliation, we must be satisfied with measures that will secure an efficient co-ordination of the efforts of all concerned while interfering as little as possible with the principles of home rule.

After full and earnest deliberation, the directors, acting with the Committee of Arrangements, have adopted a programme for this meeting which gives us three working days and a fourth day for an excursion, which, apart from the recreation feature, will afford the members an opportunity for closer association and personal conferences.

The programme for the first three days gives us twelve meeting hours, supplemented by an inspection trip to the Astoria plant, which will present an opportunity of great educational value.

Should we be fortunate enough to consume only two hours on routine business, we shall have then only ten hours left for the presentation and discussion of papers and technical reports—little enough when we reflect that, to participate in these ten hours of conference, our members come at large expense from all parts of the United States and points outside our borders. Certainly, then, no effort should be spared to use this time to the greatest possible advantage. It seems to me that the methods now pursued as to distribution of papers in advance of the meetings and the reading of these papers

at length at our meetings is inconsistent and wasteful of money and effort. If, at large expense, the advance distribution of papers is to be continued, then only abstracts, carefully prepared by the authors, should be read at the meetings. This course is successfully followed by many technical societies.

Before closing, let me say a word on behalf of the work performed under the direction of the Trustees of the Gas Educational Fund. This work should appeal to every gas man who believes in advancing the interests of the industry and in helping the young men connected with it to better prepare themselves for their adopted vocation. This work should be put upon a stronger and more permanent foundation. The Trustees should have an endowment in some measure commensurate with the importance of the work in hand. If the importance and high character of the work were appreciated by the gas men of the United States, such an endowment could be secured that it would not be necessary for the Trustees to go around every five years, hat in hand, and also that the scope of the work could be materially broadened and extended. Our Constitution states that one of the objects of our organization is "the education of employees of gas companies to enable them to better perform their duties." Let us not be satisfied with the subscription annually made by the Institute, but let us individually endeavor to secure the support of the companies we represent, comparatively few of whom are now helping to carry the burden.

In conclusion, then, let me express the hope that we will continue our efforts to build up the Institute as the national authority in gas matters and that the members will as a unit, in spite of differences of opinion which must as a necessity exist, work together loyally and disinterestedly to this great end.

With this purpose continually in mind, let us each year frankly and courageously review the paths followed to see if we have traveled in the right direction and as far as our strength and opportunities have permitted.

REPORT OF NOMINATING COMMITTEE.

THE PRESIDENT: The next order of business is the presentation of the report of the Nominating Committee. Is Mr. Brown in the room?

MR. R. B. BROWN: Mr. President and Members of the Institute: Your Nominating Committee beg to submit the names of the following active members in nomination for the respective offices mentioned: Chas. F. Prichard, President; W. H. Gartley, First Vice-President; Donald McDonald, of Louisville, Second Vice-President.

For Members of the Board of Directors: J. D. Shattuck, W. A. Baehr, H. L. Doherty, W. Cullen Morris, A. P. Lathrop.

For Secretary and Treasurer, A. B. Beadle.

C. D. LAMSON,
A. S. MILLER,
C. D. GRAF,
J. B. KLUMPP,
R. B. BROWN,
Nominating Committee.

THE PRESIDENT: Gentlemen, you have heard the report of the Nominating Committee. What will you do with it? The rules governing the matter are as follows: If there is no objection, a ballot is immediately ordered under the by-law referred to in the Directors' Report. If that ballot is taken in detail, it will be taken by opening the polls and keeping them open for a specified time outside the room. If, however, there is an objection, the ballot is to be postponed to the first session to-morrow, in which case also if a ballot in detail is taken, the polls are to be opened outside of the room for a definite period. If there are no objections to the report of the Committee, that is, if no other nominations are made, then it is in order to instruct the Secretary to cast one ballot for the men nominated by the Committee. The matter is in your hands, gentlemen.

Mr. Cowdery: I move you that the Secretary cast a ballot for the names given by the Nominating Committee.

The motion was seconded.

The President: You have heard the motion, gentlemen. I hear no objection to an immediate ballot. I hear no objection made to the nominations as proposed, and the motion is made that the Secretary cast the ballot to represent the unanimous will of the Convention in favor of the gentlemen named by the Nominating Committee. One vote rules this motion out of order. All in favor say aye. Contrary, no. There is no objection. That course will be followed, and again we have to call upon Mr. Dunbar.

Mr. Dunbar: Mr. President, I cast the ballot of the members of this American Gas Institute present for the election to the various offices of the persons named, recommended by the Committee on Nominations.

Mr. A. E. Forstall: As Chairman of the Board of Tellers I report the casting of one ballot as the unanimous ballot of the Institute for:

Chas. F. Prichard, President; W. H. Gartley, First Vice-President; Donald McDonald, of Louisville, Second Vice-President.

Directors: J. D. Shattuck, W. A. Baehr, H. L. Doherty, W. Cullen Morris, A. P. Lathrop.

For Secretary and Treasurer, A. B. Beadle.

The President: I declare the gentlemen so named to be elected to the respective offices. I presume that the members would like to hear at this time from Mr. Prichard.

Mr. Prichard: Mr. President and Gentlemen, I am very glad of the opportunity to express my deep appreciation of the honor you have conferred upon me. It is an honor of which any man might be proud and I can assure you that I appreciate it thoroughly. I am very glad at this time also to have the opportunity of asking for your special support during the coming year. I think you all realize that it is no easy task to follow two such men as have preceded me. In

Mr. Clark and Dr. Humphreys we have two of the best men of the association. Not only are they of the best, but they each have a staff at their command which few of us have in our power to use. For that reason I shall need special aid and I would ask every member of the association to help me in bringing the Institute a little farther up. We want to see it progress, and it seems to be my task to help it progress during this coming year. I therefore ask your support, and I feel sure from the manifestations I have seen here this morning, that I shall have it, and I want to thank you for it. (Great applause.)

(There were cries, "Gartley! Gartley!")

Mr. Gartley: Gentlemen, I wish to express my deep appreciation of the honor that is involved in this election. I can only say that I have had the pleasure—or perhaps I had better say the privilege—of working with Dr. Humphreys until the late hours of the night, and I can assure you, gentlemen, that the position of President of this Institute is no sinecure; consequently, I wish to express to Mr. Prichard my very great interest in his health for the coming year.

The President: Mr. McDonald, shall we hear from you, sir?

Mr. McDonald: I thank you very heartily. I appreciate the honor conferred upon me and I will do all I can to hold up the hands of Mr. Prichard, realizing that he has a great task before him if he aims to do any more than hold up the standard which has already been set for this association.

REPORT OF TRUSTEES GAS EDUCATIONAL FUND.

The President: We will now receive the report of the Trustees of the Gas Educational Fund.

Mr. A. E. Forstall: I have here a signed copy of the report to present to the Institute, but I wish to suggest that, as the report has been printed in advance and distributed, I

be excused from reading it and taking up the time of the meeting.

THE PRESIDENT: What will you do, gentlemen, with Mr. Forstall's request, namely, that as the matter has been printed in advance and distributed and you have it in your hands, that he be excused from reading it, and that it be considered that he has rendered his report? Shall we take that action?

MR. T. D. MILLER: I move that the report be accepted as printed and distributed.

The motion was seconded.

THE PRESIDENT: It has been moved and seconded that the report be accepted as printed and distributed to the members individually. All in favor of that resolution will please say aye. Contrary, no. It is carried.

TENTH ANNUAL REPORT OF THE TRUSTEES GAS EDUCATIONAL FUND.

To the Subscribers to the Trustees Gas Educational Fund:

GENTLEMEN: The Trustees appointed at the Twenty-sixth Annual Meeting of the American Gas Light Association, held October 17th, 1908, to administer the Educational Fund formed by your subscriptions, submit the following report as to the work done from October 1st, 1907, to September 30th, 1908.

There having been no change in the amount of money which could be spent, it has not been possible to do more than carry on the work of the Correspondence Class in a manner similar to what has been done in previous years, although, as has been urged in previous reports, the gas industry would be greatly benefited if we were able to broaden our work in a manner which is now impossible on account of lack of funds.

Most of the subscriptions which have been in force expired with the beginning of the current fiscal year, and it will be necessary to secure the renewal of these subscriptions if the work is to be carried on. Some of the larger ones have already been renewed, and a general appeal will be sent out before long to all persons interested in the gas industry in the

United States and Canada. It is to be hoped, however, that those subscribers whose subscriptions have expired and have not yet been renewed will not wait for such an appeal but will renew their subscriptions of their own accord. Where the subscriptions are personal ones it is to be desired that the subscribers will also interest their companies in the work to the extent of having these companies make subscriptions also.

The publication of the volume containing all of the answers sent out to the different sections of the class is well under way, but necessarily proceeds slowly on account of the checking of proof both by the Secretary and by the Chairman. About one-quarter of the matter has been set up in type and the volume should be ready to be issued early in 1909.

During the year fifteen members of the Section of 1908 finished their course and their connection with the class ceased, while the Section of 1911 started work on January 1st, 1908, with a membership of fifty-three.

The number of members in each section at the beginning of the year, the changes that have taken place during the year, and the names of the members of the class who have completed the course during the year, are shown in detail on the Secretary's report, which is appended.

The Section of 1909 now contains nineteen members, the Section of 1910 thirty-three, and the Section of 1911 forty-nine, making the total membership in the regular class one hundred and one. Four special students are receiving the questions and answers with the Section of 1911.

The card index of the principal articles published in the *American Gas Light Journal, Progressive Age,* and the *Journal of Gas Lighting* has been kept up during the year.

It may be advisable to remind the subscribers that at the office of the Secretary, No. 58 William Street, there is a room conveniently located in the downtown business district which is available for their use in case, when visiting New York, they wish to arrange for meeting friends or business associates at some place other than their hotel.

The Treasurer's report, which is appended, shows the total amount of subscriptions to date, the available income and

expense for the year, a summary of the cash account and the statement of the amount of the surplus fund and the securities in which it has been invested.

The Surplus Fund is made up of a contribution of $1,000, of subscriptions paid in in advance of the time when they are due, of unexpended balances and of interest received on investments. The proper portion of the advance subscriptions will, of course, be drawn out each year to meet expenses, but the unexpended balances and the interest will accumulate into a fund which will be available to assist in carrying on the work in case all the present subscriptions are not renewed when they expire.

Respectfully submitted,

Trustees Gas Educational Fund,

Walton Clark,
Chairman.

Alfred E. Forstall,
Secretary.

	Section of 1908	Section of 1909	Section of 1910	Section of 1911	Special Class 1909	Special Class 1910	Special Class 1911	Total
Members enrolled October 1, 1907	17	24	55		3	1		100
Entered class January 1, 1908				53			4	57
Additions to class since January 1, 1908				32				32
Reinstated in class during year		2	2					4
	17	26	57	85	3	1	4	193
Resigned since October 1, 1907	1		1	7				9
Dropped for non-receipt of answers since Oct., 1907	1	7	23	29	3	1		64
Finished course during year	15							15
	17	7	24	36	3	1		88
Total enrollment September 30, 1908		19	33	49			4	105

Applications on file for admission to class January 1, 1909 20

NAMES OF STUDENTS WHO COMPLETED THE THREE YEARS' COURSE WITH SECTION OF 1908.

JOHN C. BUCKLEY, Chicago, Ill.
PETER J. CARNEY, Allingtown, Conn.
ROBT. A. CARTER, JR., New York, N. Y.
E. M. COLQUHOUN, Philadelphia, Pa.
CLIFFORD E. FOX, Battle Creek, Mich.
F. F. INGWALL, Binghamton, N. Y.
M. D. KNUTSEN, Astoria, Oregon
EDWARD LAUDEMAN, Cincinnati, Ohio
CHAS. MCDONNELL, Quincy, Ill.
DON T. MERRILL, Detroit, Mich.
BOYD S. NICCUM, Liberty, Ind.
WM. J. PALESKE, Chicago, Ill.
WM. F. PEARCE, Philadelphia, Pa.
G. A. PETRIE, Hinsdale, Ill.
C. B. STROHN, Elgin, Ill.

In addition to these FRANK F. KELLEY, Augusta, Ga., and E. D. MINARD, Newark, N. J., answered all except the last two sets of questions.

Report of Wm. R. Beal, Treasurer, for the Fiscal Year Ending September 30th, 1908.

Condition of Subscriptions.

		For Year 1907—1908
Total new subscriptions reported September 30, 1907	$22,451.00	$4,495.20
Total old subscriptions holding over from original period (none)		
Subscriptions received since September 30, 1907	155.00	31.00
	$22,606.00	$4,526.20
Less amount unpaid on account of death of subscriber		10.00
Total September 30, 1908	$22,606.00	$4,516.20

Received from subscribers since September 30, 1907	$4,080.00	
Payments not applicable to year	274.00	
Total paid in by subscribers since September 30, 1907, and available for year	$3,806.00	
Paid in previous to current year on account of 1907–1908 subscriptions	570.20	
Total paid in by subscribers available for this year	$4,376.20	
Still to be paid for this year	140.00	
Total subscriptions available for year		$4,516.20
Dues received for membership in Special Class		20.00
Sale of one complete set of questions and answers for Section of 1905		15.00
Total amount available for year		$4,551.20

Statement of Income and Expense.

Total amount available for year		$4,551.20
Expenses.		
Secretary's Salary	$3,000.00	
Office Rent	300.00	
Printing, Stationery, Postage, etc	649.51	
Cuts used in illustrating answers	23.92	
Periodicals and Binding	8.73	
Fire Insurance on Books	12.18	
Total Expenses paid to October 1, 1908	$3,994.34	
Add for Expenses Incurred but Unpaid:		
Printing, Stationery, Postage, etc. $47.50		
Cuts used in illustrating answers 1.92		
	49.42	
Total expenses for year		$4,043.76
Balance		$507.44
Depreciation on Furniture		17.33
Surplus on year's operation		$490.11

Cash Account.

Received from subscribers since September 30, 1907, Current Fund	$4,080.00	
Interest on securities owned as scheduled under heading "Surplus Fund"	285.00	
Interest on deposits in bank	20.67	
Sale of one complete set of questions and answers for Section of 1905	15.00	
Dues received for membership in Special Class	20.00	
Total receipts for year	$4,420.67	
Cash balance from last year	2,212.56	
Total to account for		$6,633.23
Expenses for year paid	$3,994.34	
Expenses of previous year paid	76.15	
Total paid out		4,070.49
Balance		$2,562.74
Balance in Knickerbocker Trust Co., as per Pass Book, less checks unpaid	$1,754.80	
Balance in Guaranty Trust Co. of New York, as per Pass Book	807.94	
		$2,562.74

Surplus Fund and Investments.

Amount paid in by subscribers in advance	$ 578.00	
Amount paid in by subscribers to Surplus Fund	1,000.00	
Unexpended balances previously reported	3,880.53	
Unexpended balance from 1906–1907	674.26	
Interest on bonds to date	1,947.22	
Interest on deposits in bank	282.16	
		$8,362.17

Already Invested.

$2,000 Binghamton Gas Works, 1st mortgage 5% bonds	$1,930.00	
$1,500 Atchison, Topeka & Santa Fe R. R. general mortgage 4% bonds	1,513.75	
$1,000 Omaha Gas Company 1st mortgage 5% bonds	1,000.00	
$1,500 New Gas Light Company of Janesville 1st mortgage 5% bonds (guaranteed by The United Gas Improvement Company)	1,500.00	
Furniture	125.21	
		6,068.96
		$2,293.21

New York, October 15th, 1908.

We, the undersigned members of the Finance Committee of the Trustees Gas Educational Fund, have this day examined the books and accounts of William R. Beal, Treasurer, for the year ending September 30, 1908, and have found the same to be correct, and the above balance of $2,562.74 to be in bank.

Alex. C. Humphreys,
W. F. Douthirt,
Finance Committee.

RESOLUTIONS ON THE DEATH OF THE LATE SIR GEORGE LIVESEY.

THE PRESIDENT: May I suggest that at this Convention, and early in its course, we should take appropriate notice of the death of one of the most prominent figures ever connected with the gas industry—Sir George Livesey. I shall be glad to listen to any resolution that would fittingly express the regret and sorrow of the members of this Institute in connection with that event.

MR. A. G. GLASGOW: I beg leave to hold the respectful and sympathetic attention of all members of the Institute here present while I present the following resolution upon the death of the late Sir George Livesey:

"Having learned with deep regret of the recent lamentable death of Sir George Livesey, whom we were proud to number among the Honorary Members of the late American Gas Light Association,

The Members of the American Gas Institute, in Annual Meeting Assembled,

Respectfully express their unqualified admiration of Sir George Livesey, as an engineer, an administrator, and a *man,* and

Record their profound sense of the great loss sustained through his death by all members of the Gas Industry in every part of the world."

THE PRESIDENT: You have heard the resolution. Is it seconded?

MR. WALTON CLARK: Mr. President, while I regret the occasion, I am proud of the privilege of seconding the resolution.

THE PRESIDENT: You have heard the resolution, gentlemen. Are you ready for the question?

The question was called for.

THE PRESIDENT: All in favor will please say aye.

It is carried.

MR. CHARLES H. NETTLETON: I ask for a rising vote.

THE PRESIDENT: All in favor will rise.

The whole body of delegates then arose, and after some moments of silence resumed their seats.

REPORT ON THE BEAL MEDAL.

THE PRESIDENT: The next business is reports on the Beal Medal. Mr. Rollin Norris reports on the American Gas Light Association papers of 1905.

MR. NORRIS: As Chairman of the Beal Medal Committee for that year, I take pleasure in reporting that the committee has awarded the Beal Medal for 1905 to Mr. Henry L. Rice for his paper on "High Pressure Distribution."

THE PRESIDENT: You have heard the decision and that will stand good as so given, and the medal will be awarded to Mr. Rice. Is Mr. G. G. Ramsdell in the room? Will somebody see if Mr. Ramsdell is in the corridor? I should like to have these matters disposed of in their due order.

MR. J. A. NORCROSS: Mr. President, I heard him say last evening he would not be able to be present at the meeting this morning.

THE PRESIDENT: Mr. Ramsdell is not at fault, as I am anticipating the order given in the program. Next is Mr. C. F. Prichard. Will he report?

MR. PRICHARD: The committee to whom was referred the awarding of the Beal Medal for 1907 meeting, would report that they deem it inadvisable to award the medal this year.

The committee recognize the great value of the reports of the various committees of the Institute, but are informed by the Directors that the award cannot be made to a committee.

C. F. PRICHARD,
A. S. MILLER,
E. G. COWDERY.

REPORT OF PUBLIC RELATIONS COMMITTEE.

THE PRESIDENT: Mr. Cowdery.

MR. COWDERY: Mr. President, the report of the Public Relations Committee is very short, and was made to the Board of Directors, and correctly reported in the Proceedings of the Board of Directors this morning. I think there is no further report to be made.

THE PRESIDENT: You have heard the report of Mr. Cowdery, and it will be accepted, if there is no objection.

REPORT OF TECHNICAL COMMITTEE.

THE PRESIDENT: Report of the Technical Committee. Mr. W. H. Gartley, chairman.

MR. GARTLEY: Gentlemen, I have a very short report, the main report having been made to the Directors. To refresh the minds of the members as to the purposes and the scope of the Technical Committee, I will quote from the Directors' report for the year 1907.

Report of Technical Committee.

"To insure quality, as well as quantity, and a unity of purpose, the oversight of the work should be in comparatively few hands. To accomplish this end the Board recommends that there be two general committees, viz: Technical Committee and Public Relations Committee—each committee to be composed of six members, to be appointed by the President each year, and to serve for one year. In general, every question which has a bearing on the relation of a company to the public, or to any governing body, would be considered by the Public Relations Committee. The Technical Committee would devote its special attention to the prosecution of research work, and to secure papers for the meeting. Every resolution of the Institute for the investigation of any question, whether as the result of the reading of a paper or not, will be referred by the President to whichever of these committees

it would naturally belong. Whenever either committee thought it advisable, a sub-committee would be appointed, one member of which should be of the general committee and the other members being selected from the Institute membership. This sub-committee would exist at the pleasure of the general committee, to which its report would be made.

"If the membership of these two committees be properly chosen, they will, in connection with the Secretary, devoting his entire time to Institute work, effect a marked improvement in the latter. Instead of as at present papers coming in each year too late to be properly considered before going to press and the meeting program a miscellaneous collection of subjects, it is possible to imagine a program thought out a long time in advance, each paper more or less a supplement of the other, and in the hands of the committee several months before the meeting, to enable careful consideration and possible revision.

"With the organization as above outlined, there will be far less danger, than now exists, of ill-considered papers and discussion becoming embodied in the Proceedings, and of a hasty action on questions, whether of technical nature, or affecting public relations. Notwithstanding this, the Board recommends that any resolution, recommendation, or report, that has not been considered and approved by the Board of Directors, and that, in the opinion of the Chair, would have the effect of changing the policy of the Institute, or committing it to any new policy, or opinion, to which it had not theretofore been committed, should be referred by the Chair before adoption, to the Board of Directors, to report at the next regular Institute meeting."

In pursuance of this, the Technical Committee has reported at length to the Board of Directors on the work of the sub-committees and General Committee, and on the technical papers that have been written for the Institute this year by the members.

The action of the Technical Committee and the Board of Directors, upon each paper and report, will be read to you by the Secretary at the conclusion of the reading of the paper, or report, or after the discussion thereon.

The report of the sub-committees as read, having met with the approval of the Technical Committee, and having been submitted to the Board of Directors, who have approved and accepted the reports with or without amendment, will be submitted to the Institute for final adoption, when they will reflect the attitude of the Institute on the questions involved. In the case of the papers contributed by members the statements and opinions expressed therein should not be considered as reflecting officially the attitude of the Institute.

The expectation of the Board of Directors that the reports and contributions by members to the Proceedings would have been in the hands of the committee several months before the meeting to enable careful consideration and possible revision this year, has not been fully realized, the result being that the reports and papers as printed, and now in your hands, have been, in some cases, revised by the Board of Directors, and will not appear in the final proceedings exactly as printed in the advance copies. We suggest that the Technical Committee, in the future, insist that all contributions shall be presented to the Technical Committee in complete form by August 1st.

THE PRESIDENT: You have heard Mr. Gartley in behalf of the Technical Committee.. What will you do with the report? I presume you will accept it and order it placed on the records of the Proceedings.

Motion was made and seconded to that effect and duly carried.

REPORT OF COMMITTEE ON UNIFORM SYSTEM OF ACCOUNTING.

THE PRESIDENT: The next business in order is the report of the Committee on Uniform System of Accounting. Mr. Carter made his personal apologies to me this morning, and said he had expected to read that report as Chairman, but that he had been suddenly called off in connection with a legal matter, and it was absolutely impossible for him to be here.

Will Mr. Prichard read it, or have it read, from the desk? Mr. Prichard is on that committee and next in order.

Mr. Donald McDonald: While Mr. Prichard is reaching the stand, I want to call the attention of the association to the fact that a most excellent presidential address was received, and no disposition made of it. It is customary to refer such addresses to a committee, and I move that a committee, consisting of Mr. A. G. Glasgow, Mr. A. S. Miller, and Mr. J. H. Eustace, be appointed to consider the presidential address and report to the association.

The motion was seconded.

The President: Will Mr. Doherty be kind enough to take that motion in hand?

Mr. Doherty: Gentlemen, you have heard the motion. All in favor say aye. Contrary, no.

The motion is carried.

The President: Mr. Prichard, will you now proceed?

Mr. Prichard: (Reads report.)

REPORT OF PROGRESS BY COMMITTEE ON UNIFORM SYSTEM OF ACCOUNTS.

Before your Committee could begin work on the revision of the Uniform System of Accounts adopted by the American Gas Light Association in October, 1902, the Public Service Commissions of the First and Second Districts of the State of New York and the Railroad Commission of the State of Wisconsin announced their intention of standardizing the accounts of Gas and Electric Companies within their several jurisdictions.

Following these announcements, the Commissions organized statistical bureaus, appointed expert statisticians, and held several conferences, which representatives of the Gas and Electric Companies as well as of the State and National Committees on Uniform Accounting were invited to attend.

In the beginning, the Commission of the First District and the Commission of the Second District in the State of New York acted entirely independently of each other; but a consideration of the advantages to be derived from joint action soon led to combined hearings, which were attended by representatives of the Commissions and the Companies in both districts as well as by members of both National and State Accounting Committees.

At an early date the attention of both Commissions in New York State was invited to the fact that the Committees of the National Associations representing the Gas and Electric Lighting interests were engaged in formulating a Uniform System of Accounting; and the suggestion was made, that, if by working together, the Commissions' representatives and the members of these Committees could agree upon standard systems of accounting for these two branches of public service industry, such systems would in all probability be adopted by Public Service Commissions present and future for other States, and, through adoption by the National Associations, would become the recognized standard systems of accounting for Gas and Electric Companies throughout the country. The advantages which would accrue to the Commissions, the Companies, and the public generally, from the accomplishment of this undertaking, were too obvious not to commend themselves to the favorable consideration of the Commissions, and thereafter the representatives of the New York Commissions and of the National Associations were in frequent communication with each other on the subject in hand.

At some of the public conferences, representatives of both the Massachusetts and Wisconsin Commissions were present.

In the very beginning, your Committee took the stand, that, to be universally available, a Uniform System of Accounting for Gas Companies would have to possess the qualities of simplicity and flexibility. Simplicity, that it might be made use of by the smaller companies; and flexibility, that it might readily lend itself to the greater elaboration of detail necessary for recording the operations of larger companies.

The Commissions' representatives, on the other hand, took the stand, that, in order to furnish all the information desired by the Commissions and the public, a Uniform System of Accounting should show a company's operations in the greatest possible detail. A narration of the many debates and conferences which were held and the many tentative systems which were considered, would be unprofitable at this time.

Some idea of what was accomplished by your Committee can be gathered from the fact that the tentative scheme promulgated by the New York State Commissions and the Wisconsin Commission called for the segregation of the property accounts; each class of assets were to be shown in great detail under the head of tangible and intangible property. "Maintenance" or "Repairs" accounts and "Depreciation" accounts were provided in the Operating Expenses, to correspond with the numerous tangible and intangible capital accounts.

The New York Commissions in their latest tentative scheme abandon the idea of calling upon the Companies for any more elaborate segregation of their capital accounts than is shown in their books at the time their new system of accounting goes into effect. Such capital accounts are to be reported as they appear upon the books and are to be called "Fixed Capital."

Charges to capital accounts made subsequently to the date the new system goes into effect are to describe the plant and property acquired with sufficient particularity to enable its identification whenever necessary.

Depreciation of capital is to be taken care of by charging in the operating expenses month by month the amount estimated to be necessary to cover such wear-and-tear and such obsolescence and inadequacy as have accrued during the month.

The evident intent of the Commissions is to provide that when capital is retired from service, any loss which accrued prior to the date their order went into effect shall be charged against the Profit and Loss Account or against such reserve accounts as may have been created prior to the date of their order, and that the loss which accrued subsequently to the date of their order shall be charged against an amortization account created subsequently to the date of their order by monthly

charges in the operating expense accounts; and that such monthly charges shall have been adequate to take care of such loss as it accrued.

At our last hearing it was stated by a Commissioner that when the system has been in operation a year or even less, points will no doubt arise which will convince them that the system will need modification, in which event, he stated, changes would be made with the least possible delay.

Your Committee feels that it cannot too warmly express its appreciation of the courteous consideration it received at the hands of the Commissions and their representatives.

Your Committee hoped to present at this time for your consideration the New York Commissions' final system of accounting together with some definite recommendation by the Committee in relation thereto. We learn, however, that the Commissions' final order will not be published until too late to be embodied in our report. We therefore present herewith the Commissions' latest tentative system, which, we believe, will be of general interest as indicating the trend of the Commissions' mind on this important subject.

We are led to believe that the Commissions' final scheme will provide a condensed classification of accounts for the smaller companies.

Respectfully submitted,

R. A. Carter, *Chairman.*
C. F. Prichard,
A. P. Lathrop,
A. S. Cooke,
W. A. Baehr,
H. L. Rice,
G. W. Curran,
S. J. Glass,
Robert Grant,
Committee.

Note:—The New York State Commissions' Tentative System of Accounts is given in the Appendix.

THE PRESIDENT: Gentlemen, you have heard the report of the committee. In accordance with the action of the Board of Directors, as previously referred to, we have a recommendation to present.

Mr. Luqueer read the resolution upon the report of the Sub-Committee on Uniform System of Accounting, as follows:

"The Board of Directors recommends that the Technical Committee appoint a sub-committee to continue the work on Uniform System of Accounting for the year 1909."

THE PRESIDENT: What will you do with the recommendation?

MR. NETTLETON: I move its adoption.

The motion was seconded and carried.

REPORT OF PROGRESS ON DIPPING METERS.

THE PRESIDENT: Is Mr. Castor ready to report progress on dipping meters?

MR. W. A. CASTOR: (Reads printed report.)

REPORT OF PROGRESS ON DIPPING METERS IN PHILADELPHIA.

A report was made to this body last year, covering the experience up to that time, with dipping meters. The following report continues the experience to date:

The number of dipping meters in use in Philadelphia has increased during the past year from 45 per cent. to 59 per cent. of the total meters in use.

Examination of the diaphragms of dipping meters removed from service shows that the mineral oil used in these meters has had no detrimental effect on the leather, and also shows that the dipping diaphragms do not become bleached or changed in general condition.

The following is a comparison of summaries of meter tests of dipping and non-dipping meters, covering a period of two years:

	(9-1-06 to 9-1-07)		(9-1-07 to 9-1-08)	
	Dipping	Non-Dipping	Dipping	Non-Dipping
Number tested	12,876	51,041	27,761	36,661
Average error	1.6%	2.9%	1.9%	4.0%
Net error — slow	0.77%	1.5%	1.0%	1.3%

The percentages given in the above table show the effect of the oil in the dipping meters in maintaining the proof of these meters within smaller limits of error and in reducing the net error. The net errors of the dipping meters, however, differ very slightly from that shown for the non-dipping meters. This is due to the fact that the dipping practice has greatly reduced the number of fast meters. The total slow error is consequently offset by a much smaller total fast error.

The percentage of meters of each class tested during the past year and found within O. K. limits—*i. e.*, 1 per cent. fast or 1½ per cent. slow—is shown below:

Class No. 1.	(Non-dipping).....	35.3%
Class No. 2.	(Dipping).....	60.5%
Class No. 3.	(Dipping).....	68.1%

The method of handling meters into which oil has been introduced for the first time, at the district shops, has been changed during the past year, as a result of experiments made to determine the rapidity with which the oil would travel up the hard and partially, or completely, bleached diaphragms of the meters removed from service. It was found that the oil in many meters did not reach the top of the diaphragms of meters up to 10-light inclusive, within the ten-day time limit, nor did it reach the top of the diaphragms of meters 20-light to 100-light inclusive, within the twenty-day period allowed.

It was found that, by laying the meters first on the outlet side for a time immediately after putting in the oil, and then on the inlet side for a similar period of time, that the diaphragms would become saturated within the time limits.

The results obtained from the dipping practice during the past year continue to demonstrate the superiority of dipping over non-dipping meters, along all lines claimed for the dipping practice in previous papers and reports on the subject.

An interesting effect of the changes in the condition of the diaphragm leather, due to the drying out of the same, may be here mentioned. Experiment has shown that successive prover tests of a meter removed from service will indicate that the meter becomes progressively faster with each test. This is due to the fact that the air (or gas) from the prover, in its passage through the meter during the test, absorbs or evaporates the condensate on the diaphragms, thus slightly stiffening the leather and causing the meter to show faster on the next test. This effect is produced, although to a smaller extent, even on dipping meters. Of course, if the air (or gas) passed through the meter in the tests was previously saturated with condensate this effect would not be produced. As there are difficulties in the way of thus saturating it, the moral to be drawn is that the first test made on a meter brought in from use is the correct test, or the one most nearly showing the condition of the meter when in use. It is the practice of some municipal or state inspectors to take the average of three or more successive tests as the official test; for the reason given, this practice is incorrect. For the same reason only a small quantity of air (or gas) should be passed through the meter (prior to making the first test), in order to bring it to its ordinary working condition.

The President: Gentlemen, you have heard the paper by Mr. Castor. It is now open for discussion. You have heard a practical paper.

Mr. R. B. Brown: Mr. President, I can only confirm some of the statements that he has made. Apparently the action of the mineral oil is beneficial in its effect upon the diaphragms. We also find that it has a very beneficial effect on the valve motion; there seems to be enough oil carried to the seats of the valve to prevent sticking, and prevent hard working of the meters. We find that it almost eliminates the causes which

tend to make a meter run fast, but causes which tend to make a meter run slow do not seem to be affected in the same degree.

MR. GARTLEY: Mr. President, the remarks that are made in the latter part of this paper as to the possibility of error in testing, ought to be well considered, and I should like to ask whether it is the general practice, or to what extent the practice of using gas for testing meters is carried. Mr. President, I should like to request that those gentlemen who use gas for testing meters hold up their hands.

One delegate held up his hand.

MR. T. D. MILLER: My experience with dipping meters is that our very serious trouble has no reference to the report at all, and that is the large accumulation of condensation, rather than oil in the bottom of the meter. In order to get some information on the subject, we took some of the oil that we were using for dipping meters, placed it in a bottle and passed a stream of gas over it, and in ten days the volume of oil in that bottle had increased 85 per cent. As the oil line rises, of course it is more than likely that this light oil deposits on top of the heavier mineral oil, and in that way cuts off the capillary action of the leather in picking the mineral oil up and carrying it up to the upper part of the leather. With this problem before us, we have done some work, and I believe have accomplished something toward oiling the diaphragm from the other side, that is, from the top instead of the bottom; and, if I may be pardoned for getting almost into a commercial subject, will say that we are now operating some 50 meters that are being oiled from the top with perfect results so far; meters that have passed approximately 200,000 feet of gas, come in testing within one-half of one per cent. of the same test that they made when they went out. The subject has not been developed far enough for me to give you any extensive data, but I should be very glad, indeed, to talk to anyone who wishes to see me after the meeting.

MR. R. B. BROWN: In answer to some of the questions that are raised by Mr. Gartley's remarks, in support of my

position I would say that I have had some experimental work done, and it is exceedingly interesting on the point raised by Mr. Gartley. Testing with air, under normal conditions, in our part of the country where the degree of saturation is not high, we find that repeated tests invariably show a meter faster on each consecutive test. Now this question of regulation is pretty apt, in the future, to come up in the testing of meters, especially in the re-testing of disputed cases. This fact is certainly one that we ought to take cognizance of in taking care of, or in influencing the way in which the regulations are handled. If our first testing is disputed, and the second, and the third test be made, or if, as in Wisconsin, we have a gas company test, then, perhaps, the city's inspector's test, and later a State inspector's test, in which this test shows (as from experimental work, we know that they will with air) a meter increasingly faster, it is a very serious matter, and one which we should give a great deal of thought to. In testing a meter with gas and with air, we find very considerable discrepancies due probably largely to the difference in gravity and the difference in capacity of the meter with a fixed inlet pressure, and a given break of pressure through the meter. We also find that the same meter, testing first with gas, and then with air under exactly the same conditions, shows discrepancies which are too great to be ignored. In connection with this I have a few figures here which I won't take the time of the Institute to read, but they can be incorporated in the Proceedings.

GAS

Low Capacity Test

Co.'s Meter No.	Prover	Meter	Per Cent. Error	Cu. Ft. per Hour	Press. Inlet	Press. Outlet
14476	2.05	2.00	2.44 S	45.	20/10	18/10
85652	2.01	2.00	.498 S	45.	20/10	19/10
84345	2.02	2.00	.99 S	45.	20/10	18/10
21006	2.02	2.00	.99 S	45.	20/10	18/10
57057	2.03	2.00	1.48 S	45.	20/10	18/10
			.3 Break			
14476	2.02	2.00	.99 S	56.6	20/10	17/10
85652	2.01	2.00	.498 S	57.	20/10	17/10
84345	2 00	2.00	O. K.	57.	20/10	17/10
21006	2.04	2.00	1.95 S	57.1	20/10	17/10
57057	2.02	2.00	.99 S	58.	20/10	17/10
			AIR			
14476	2.01	2.00	.498 S	33.6	20/10	17/10
85652	1.96	2.00	2.04 F	38.	20/10	18/10
84345	1.96	2.00	2.04 F	35.9	20/10	17/10
21006	2.02	2.00	.99 S	33.9	20/10	17/10
57057	2.01	2.00	.498 S	34.3	20/10	17/10

Full Capacity Test

Prover	Meter	Per Cent. Error	Cu. Ft. per Hour	Press. Inlet	Press. Outlet	Temp. Room	Temp. Gas	Temp. Prover	
2.00	2.00	O. K.	120.	20/10	12/10	74	79	82	*
2.01	2.00	.498 S	133.3	20/10	12/10	74	79	81	*
2.01	2.00	.498 S	128.	20/10	12/10	74	79	81	*
2.03	2.00	1.48 S	120.	20/10	11/10	74	79	81	‡
2.01	2.00	.498 S	133.	20/10	12/10	74	79	81	‡
			.5 Break						
2.03	2.00	1.48 S	88.	20/10	15/10	74	79	82	*
2.01	2.00	.498 S	92.3	20/10	15/10	74	79	82	*
1.99	2.00	.52 F	92.5	20/10	15/10	74	79	82	*
2.03	2.00	1.48 S	90.0	20/10	15/10	74	79	82	‡
2.03	2.00	1.48 S	92.3	20/10	15/10	74	79	81	‡
			AIR						
1.98	2.00	1.01 F	88.0	20/10	10/10				*
2.00	2.00	O. K.	103.	20/10	11/10				*
2.00	2.00	O. K.	100.	20/10	11/10				*
2.04	2.00	1.95 S	88.	20/10	11/10				‡
2.01	2.00	.498 S	97.	20/10	11/10				‡

* October 15th, In Shop.

‡ From Stock.

No. Test	Co.'s Meter No.	Prover Reading	Meter Reading	Per Cent. Error	Date of Test
1	3614	4.06	4.00	1.48 S	October 7, 1908
2	3614	4.06	4.00	1.48 S	"
3	3614	4.05	4.00	1.25 S	"
4	3614	4.03	4.00	.74 S	"
5	3614	4.04	4.00	.99 S	"
6	3614	4.02	4.00	.50 S	"
7	3614	4.01	4.00	.25 S	"
8	3614	4.00	4.00	O. K.	"
9	3614	4.00	4.00	O. K.	"
10	3614	3.99	4.00	.25 F	"
11	3614	3.99	4.00	.25 F	"
1	14961	4.50	4.00	11.10 S	October 7, 1908
2	14961	4.50	4.00	11.10 S	"
3	14961	4.49	4.00	10.90 S	"
4	14961	4.46	4.00	10.30 S	"
5	14961	4.42	4.00	9.50 S	"
6	14961	4.35	4.00	8.03 S	"
7	14961	4.34	4.00	7.82 S	"
8	14961	4.28	4.00	6.54 S	"
9	14961	4.26	4.00	6.10 S	"
10	14961	4.24	4.00	5.66 S	"
11	14961	4.18	4.00	4.31 S	"
12	14961	4.18	4.00	4.31 S	"

No. Test	Co.'s Meter No.	Prover Reading	Meter Reading	Per Cent. Error	Press. Inlet Meter	Temp. Air in Prover	Temp. Air in Room	Temp. Water in Prover	Date of Test	Cu. Ft. Air per Hour
1	75435	4.00	4.00	O. K.	15/10	73	74	73	October 8, 1908	43
2	75435	3.98	4.00	.52 F	15/10	74	74	73	"	43
3	75435	3.96	4.00	1.01 F	15/10	74	74	73	"	44
4	75435	3.95	4.00	1.27 F	15/10	73	73	73	"	46
5	75435	3.94	4.00	1.52 F	15/10	73	72	73	"	44
6	75435	3.92	4.00	2.04 F	15/10	73	72	73	"	45
7	75435	3.90	4.00	2.56 F	15/10	73	72	73	"	43
8	75435	3.90	4.00	2.56 F	15/10	73	73	73	"	46
9	75435	3.90	4.00	2.56 F	15/10	73	73	73	"	46
10	75435	3.91	4.00	2.30 F	15/10	73	72	73	"	44
11	75435	3.90	4.00	2.56 F	15/10	73	72	73	"	45
12	75435	3.90	4.00	2.56 F	15/10	73	72	73	"	45
13	75435	3.92	4.00	2.04 F	15/10	71	72	71	October 9, 1908	46
14	75435	3.88	4.00	3.09 F	15/10	71	72	71	"	46
15	75435	3.86	4.00	3.63 F	15/10	72	72	71	"	46
16	75435	3.88	4.00	3.09 F	15/10	72	72	71	"	45
17	75435	3.86	4.00	3.63 F	15/10	74	74	75	"	46
18	75435	3.85	4.00	3.09 F	15/10	74	74	75	"	45
19	75435	3.85	4.00	3.90 F	15/10	74	74	75	"	46
20	75435	3.85	4.00	3.90 F	15/10	74	74	76	"	47
21	75435	3.85	4.00	3.90 F	15/10	74	74	75	"	47
22	75435	3.86	4.00	3.63 F	15/10	74	74	75	"	47

MR. BEADENKOPF: We have oiled 49,000 meters since we started January 1st, 1907, and we found an improvement of about one-half of one per cent. in the test of meters brought in since we have been placing this oil through the meters. I think if Mr. Miller tries, operating very carefully, a little light oil in a bottle on top of the dipping oil, he will find they will mix of themselves, because the light oil is a strong solvent for the other oils.

THE PRESIDENT: We will have to close the discussion in a moment, and, perhaps, re-open it again, if we find we have time, as we have a few announcements to make, and we must adjourn at 12.30. Will the author have anything to say in response?

MR. CASTOR: I might say that we have not experienced the trouble Mr. Miller speaks of in the great accumulation of condensation in our dipping meters. In regard to Mr. Beadenkopf's assertion, the oil and condensation do mix thoroughly, and in the storing of the condensation taken from dipping meters, we cannot see any separation of the oil from condensation.

MR. T. D. MILLER: I am rather afraid that the gentlemen who are speaking about condensation regard it as a good thing. The object I have in making my statement, which includes the water of condensation as well as the oil, is to bring out the fact that if oil is present in a large area in the bottom of the meter, there is a tendency to pull down more hydro carbon. If you can avoid this oil being there in this large quantity, and stop that condensation, you are benefitting your gas, and you will certainly get better results in oiling your leather if you introduce the oil at the top of the leather, and let capillary attraction and gravitation both act instead of depending on capillary attraction to act just as it may.

THE PRESIDENT: I take the opportunity to say that discussions will not be re-opened after the Chair has announced they are closed, but I should be very glad to receive suggestions

from anybody who feels that a subject has not been sufficiently discussed. We hope to so manage the meetings that we shall have a certain amount of time left over on the last day for the consideration of such special requests.

I want particularly to call your attention to the exhibition in the corridor of illumination of a single series of colored surfaces by several light sources. It is a very important matter, most instructive and most valuable, and I think that practically none of us can look at this exhibit without being impressed with the fact that we did not fully appreciate the importance of the subject before. I have given particular study to this subject, and yet I was astonished at the presentation, and an indication of my line of thought may be given when I say that I heard a man make the statement outside that he did not think the exhibition was a very good one, because for a fair comparison silks of the same color should have been used!

(A description of this exhibit is given in the appendix.)

I also want to draw your particular attention to the exhibition of scientific instruments; it is also in the corridor. In that connection I should like to invite Mr. Preston Millar, of the Electrical Testing Laboratory, to speak briefly to us in connection with these exhibits, which he has been so kind as to co-operate with us in producing.

Preston S. Millar: Mr. President and Gentlemen, the usual photometric equipment of a gas company is a 60-inch or a 100-inch photometric bar, used chiefly for taking the candle power of gas. In the corridor at your right, there is an improvised photometric bar, which is equipped not only with the usual Bunsen photometer, but also with the contrast Lummer-Brodhun photometer, the Martens bi-prism photometer, and the Flicker photometer. These should be of interest to the delegates, as we are more or less familiar with the more usual Bunsen type of photometer. Our gas companies seem to have done but little in the testing of light distribution, testing to determine the variation in the candle power of illuminants throughout life, and in testing to determine the real efficiency of illuminants. Of interest also should be the small photometers shown, which may be used in any of these

tests, photometers which may be considered universal photometers. These same instruments may be used in tests of gas lamps and other lamps in the streets, also in tests of illumination of interiors. Also there is shown an integrating sphere. This may be readily adapted to tests of gas lamps. With its aid we can determine the total flux of light or candle power of a light source. A colorimeter is also exhibited, designed to compare difference in illuminants with respect to their color values. The color booths have all been referred to.

It seems to me that these exhibits have a real significance for us at this time. They might be considered as signs of the times, for they illustrate the tendency to apply scientific methods to commercial practice. They place in the hands of the gas companies means of studying the utilization of light sources at their disposal to the best advantage.

THE PRESIDENT: Thank you, Mr. Millar.

MR. GARTLEY: I move that a vote of thanks be conveyed to the New York Edison Company, and the gentlemen of the Electrical Testing Laboratory for the courtesy, kindness and attention which they have shown to this Institute in getting up that display.

The motion was seconded and carried.

THE PRESIDENT: The meeting stands adjourned.

AFTERNOON SESSION.

The meeting was called to order at 2.10 p. m., by the President.

THE PRESIDENT: Will Mr. Ramsdell please make a report on the Beal Medal for the year 1906?

Mr. Ramsdell then read the following report:

NEW YORK, October 22, 1908.

To the American Gas Institute.

MR. PRESIDENT: Your committee appointed to award the Beal Medal, beg leave to report as follows:

One member of the committee has been absent from the country during almost the entire year, and we have been unable to avail ourselves of the benefit of his advice. The report is, therefore, signed by the remaining members.

At least two of the papers were of such a degree of merit that it was found quite difficult to reach a decision, but after very careful consideration the committee has decided to award the medal to Mr. Wm. H. Gartley, for his paper on "The Delivery of Uniform Candle Power to the Consumer Through All Seasons of the Year."

Respectfully submitted,

GEO. G. RAMSDELL, *Chairman.*
W. H. PEARSON.

THE PRESIDENT: You have heard the report of the committee that the medal has been awarded to Mr. Gartley in connection with the papers of 1906, and that stands as the action of the committee. In that connection—I am sorry there are not more present to hear the explanation—Mr. Beal entering into the spirit of this matter fully, has already taken in hand the preparation of a new design, recognizing that this is the American Gas Institute, and not the American Gas Light Association. A new die is being prepared, which he believes will be of even greater artistic merit than the die prepared for the medal of the association.

We will listen to a paper.

MR. VON MAUR: (Reads paper.)

HIGH PRESSURE GAS DISTRIBUTION.

By JACOB D. VON MAUR.

Preamble.

The figures of cost herein are inclusive of only the items comparable, and do not include all the essential items of the cost of performing the work described.

INDEX OF EXHIBITS.

Exhibit "A"—Map showing mains 10 in. and over, as true of 1903.
" "B"—Ideal square mile.
" "C"—Map showing mains 10 in. and over, as true of January 1, 1908.
" "D"—Pressure charts taken before system was installed.
" "E"—Pressure charts in same territory after system was installed.
" "F"—An ideal square mile of mains.
" "G"—Typical high-pressure manhole as used in St. Louis.
" "H"—Typical charts taken from manholes located in city.
" "I"—Typical chart showing pressure at outlet of compressors of St. Louis County Gas Company.
" "J"—Ideal square mile for medium size towns.
" "K"—Ideal belt line for medium size town.
" "L"—Ideal square mile having a 2-in. wrought iron main distribution system.
" "M"—Some types of district and individual consumer's governors.
" "X"—Charts taken from a manhole supplying mains which are not connected with the mains in other parts of the city, so that the pressures are entirely controlled from the manhole.

Distribution Systems.

When the writer was first asked to write a paper on the subject of "High Pressure Distribution" it was intended to describe the present stage of the development of strictly high-pressure distribution, but in order to discuss the subject intelligently it is obvious that all of the various other systems of distribution must be first considered.

Gas distribution, in the broad sense, has developed according to the laws of evolution, that is, each system has been evolved as a modification of some existing system. This is shown by the following list of the various distribution systems now in use either as a whole or in part:

(A) Distribute with low-pressure from holders placed at the works only.

(B) Distribute with low-pressure, with both station holders and district holders.

(C) Distribute with low-pressure, but supply district holders through medium or high-pressure lines.

(D) Distribute with low-pressure, the low-pressure mains being reinforced from manholes located along a belt line carrying medium pressure. (1 to 5 lbs.)

(E) Low-pressure distribution, the mains being reinforced from manholes located on a belt line carrying high-pressure. (20 to 40 lbs.)

(F) Combination pressure, such as is in use in Grand Rapids, where the pressure is raised at the Works and individual governors used in the district near the Works, the idea being to eventually carry the whole system at medium pressure, using individual house governors.

(G) Consummation of the above idea, where the entire city is supplied through mains carrying medium pressure, individual governors being placed on the end of each individual service.

(H) Strictly high-pressure throughout. (20 to 40 lbs.)

In general, high-pressure systems would contemplate the use of small wrought iron mains, and would carry pressure in excess of 20 lbs. per square inch, and medium pressure installations would contemplate either wrought iron mains or cast iron mains, depending on local conditions, and would carry pressures from 1 to 6 or even 10 lbs. per square inch.

A glance at the above list will show very plainly the evolution of gas distribution. From the original, or low-pressure distribution, through the various modifications, using part high-pressure and low-pressure, we finally reached all high-pressure, both in mains and services, the latter being equipped with individual house governors throughout.

Each system has its special advantages, provided the system is adapted to the particular town or city in which it is used. There can be no fixed rule as to which system is the best that would apply to all cities.

Application of Some of the Above Systems to Cities of Various Sizes.

It would be a comparatively easy matter to assume a city of a certain size which has never been piped for gas, and then figure out the most economical method of distribution for that particular city, but as such a condition would probably never confront us, except in very rare cases, such as Gary, Indiana, it will be best to consider cities as we actually find them. The practical question which will confront most gas companies at some date in the future will more likely be: "What changes can be made in the existing system of distribution to permanently take care of all future needs of the city?"

St. Louis.

We will take first the larger cities, namely those of 300,000 inhabitants and upward, of which the City of St. Louis

MAP
OF THE
CITY OF ST. LOUIS

AS ESTABLISHED BY THE CITY CHARTER OF 1876.

PREPARED UNDER DIRECTION

J. C. TRAVILLA,
STREET COMMISSIONER

SCALE

0 ¼Mi. ½Mi. ¾Mi. 1Mi.

N.

FOREST PARK.

TOWER GROVE PARK

MISSISSIPPI RIVER

MISSISSIPPI RIVER

Sta. A.

Sta. B.

Sta. C.

Sta. D.

Sta. E.

EXPLANATION.

Streets shown with dotted lines are "not" public highways.

most economical manner, and at the same time give a much improved service.

Deducting the main leading from Station "A" to Station "G," and the main from Station "B" to Station "D," which were pumping mains, the total mileage of pipe 12 in. and over amounted to only 27 miles, practically all of which was

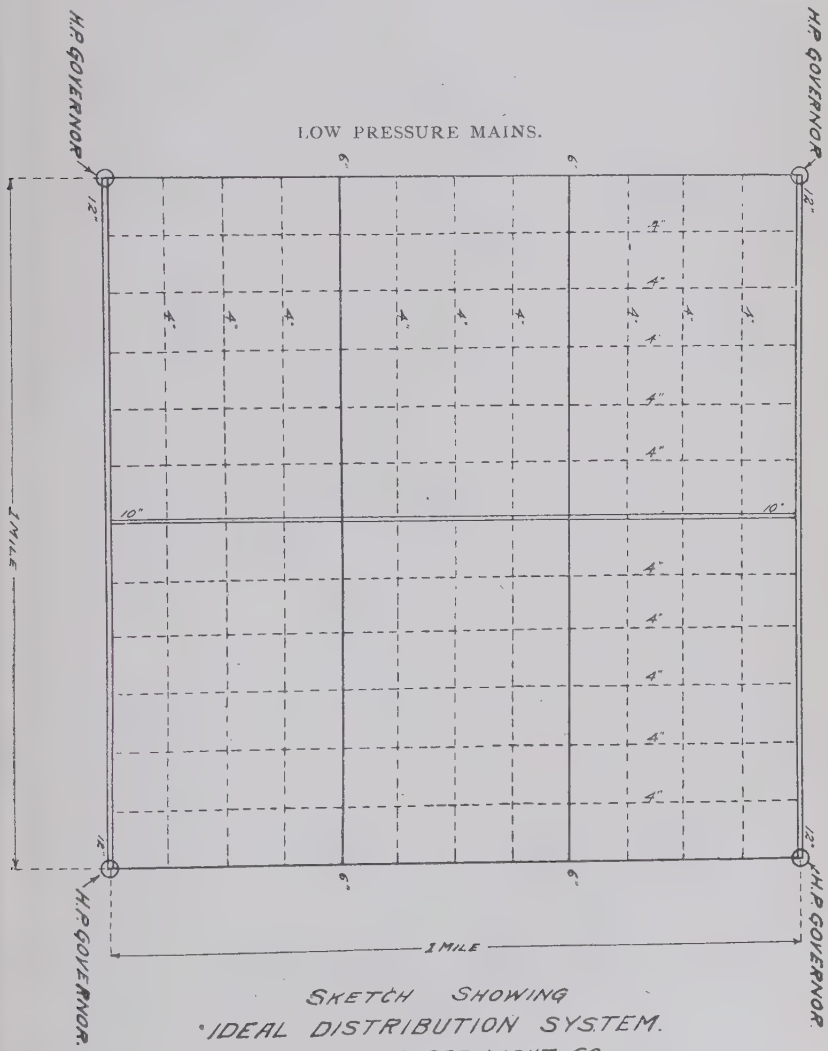

SKETCH SHOWING
IDEAL DISTRIBUTION SYSTEM.
LACLEDE GAS LIGHT CO.
ST. LOUIS.

EXHIBIT "B"—IDEAL SQUARE MILE

cast iron, and carrying low-pressure gas. In view of the fact that the city was rapidly developing in all directions, and particularly so in the northwestern and southwestern portions of the city, it is apparent that the mains in existence were entirely inadequate.

Mr. E. G. Cowdery was then General Manager of the Laclede Gas Light Company, and it was his idea to surround the city with a belt line carrying medium high-pressure gas, and to connect to this belt line all the Works and holders, and to install at various points manholes in which would be placed governors which would take the gas away from the high-pressure mains and deliver it to the low-pressure mains.

In connection with Mr. W. A. Baehr, Chief Engineer of the Company, it was decided to eventually install a manhole in the centre of each square mile of territory, and to lay low-pressure mains which would conform very closely to the mains shown on Exhibit "B," from which it will be seen it was intended to lay 12-in. mains one mile apart, then parallel to these mains three 4-in. mains would be laid, then a 6-in., then three 4-in., then another 6-in., then three 4-in., then a 12-in. and so on. On the cross streets all the mains would be 4-in., except that at the mile points a 10-in. main would be laid, and at the half mile points a 6-in. main would be laid. The manholes would be located in the center of these square miles.

Exhibit "C" is a map showing all mains 10 in. in diameter and over at the end of 1907. The heavy black lines represent mains carrying medium high-pressure, that is 5 lbs. per square inch.

The main from Station "B" to Station "D" was practically all abandoned, both on account of its size, and also on account of the fact that it had deteriorated to the extent that it was unsafe to carry gas.

The heavy black squares marked "M" represent high-pressure manholes. The endeavor was made to adapt the original layout on the ideal square mile, shown on Exhibit "B," to the existing mains.

The table given below shows the mileage of each size main

MAP
OF THE
CITY OF ST. LOUIS

AS ESTABLISHED BY THE CITY CHARTER OF 1876.

PREPARED UNDER DIRECTION
OF
CHAS. VARRELMANN,
STREET COMMISSIONER.

SCALE
0 ¼Mi ½Mi ¾Mi 1Mi.

FOREST PARK.

TOWER GROVE PARK

MISSISSIPPI RIVER

EXPLANATION.
Streets shown with dotted lines are "not" public highways.

EXHIBIT "C"—Map showing Mains 10-inch and over as True of January 1, 1908.

for both high-pressure and low-pressure mains, as true of January 1, 1903, and January 1, 1908:

	1903			1908		
Size	Low Press.	High Press.	Low and High Press.	Low Pressure	High Pressure	Low and High Pressure
2″	12 mi.		12 mi.	9 mi.		9 mi.
3″	100 mi.		100 mi.	78 mi.		78 mi.
4″	211 mi.		211 mi.	358 mi.		358 mi.
6″	91 mi.		91 mi.	180 mi.		180 mi.
8″	25 mi.		25 mi.	25 mi.		25 mi.
10″	24 mi.		24 mi.	30.6 mi.	3.4 mi.	34 mi.
12″	18 mi.	.3 mi.	21 mi.	43.4 mi.	1.6 mi.	45 mi.
16″	6 mi.	4 mi.	10 mi.	9.3 mi.	9.7 mi.	19 mi.
20″	8 mi.		8 mi.	11 mi.		11 mi.
24″	4 mi.		4 mi.	6 mi.	14 mi.	20 mi.
30	.3 mi.		.3 mi.	.7 mi.	.3 mi.	1 mi.
Total	499.3 mi.	7 mi.	506.3 mi.	751.0 mi.	29.0 mi.	780 mi.
Aver. Area, Sq.In.	33.822	163.36	35.613	36.3108	308.399	46.4285
Aver. Dia. Inch.	6.54	14.42	6.73	6.80	17.56	7.7

From the above table it will be noted that the average diameter of the high-pressure mains increased from 14.42 in. to 17.56 in., whereas the average diameter of the low-pressure mains increased only from 6.54 in. to 6.80 in. and the average diameter of all the mains in the entire city increased from 6.73 in., to 7.7 in.

It must be remembered that the increase in the average diameter is very largely due to the fact that 14 miles of 24-in. belt line were laid during the years 1903-04-05. The dotted portion of the belt line represents approximately 4 miles, and when this is completed very little additional 24-in. pipe will be needed for many years to come. It is the inten-

tion to eventually build a large Works in the extreme south-eastern portion of the city, at which time the belt line will have to be connected to this Works.

Exhibit "D" is a batch of pressure charts taken in the square mile shown in the lower right-hand corner of Exhibit "C," with Hyde Park as a centre, and before the manhole at this point was located.

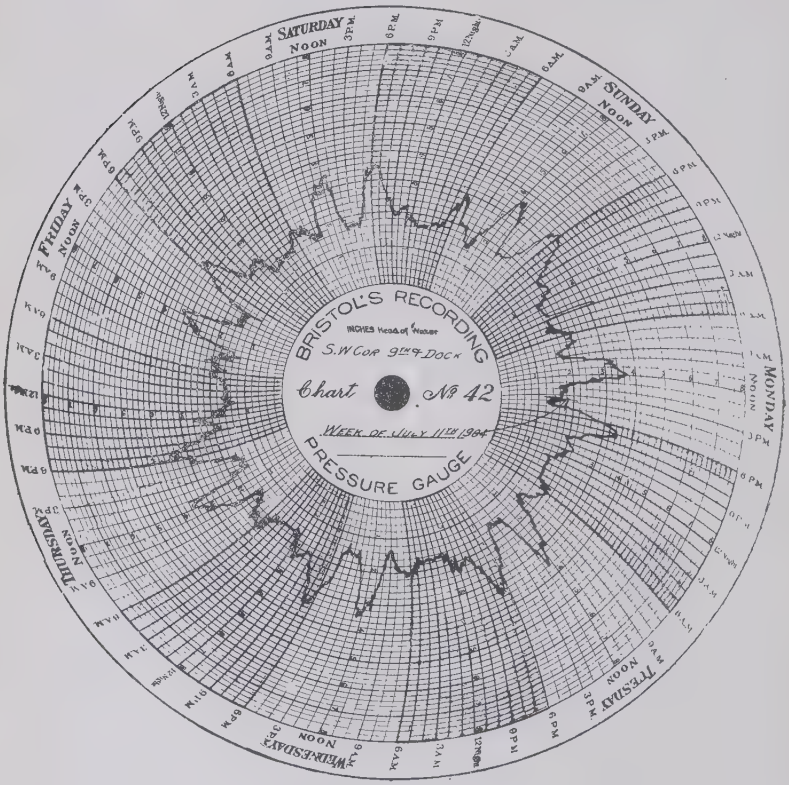

EXHIBIT "D" NO. 1.

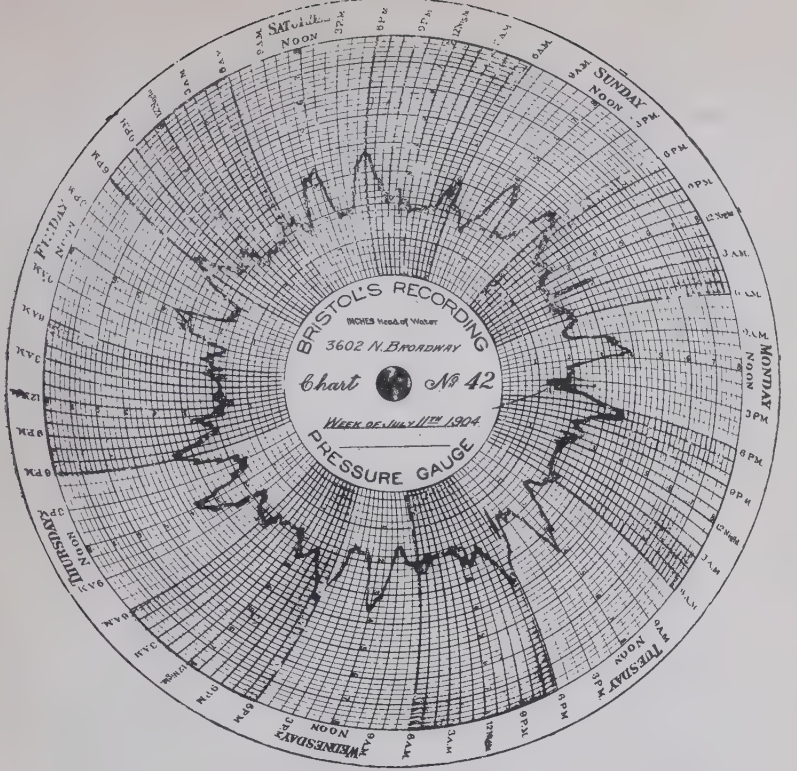

EXHIBIT "D" NO. 2.

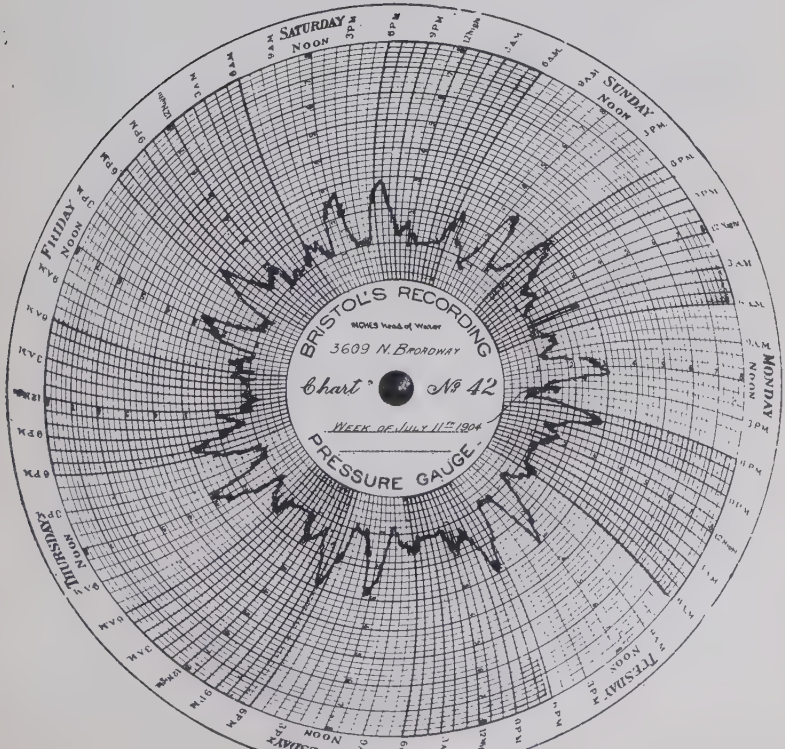

Exhibit "E" shows pressure charts taken during 1908, in this same territory, after the system was fully installed. These charts speak for themselves, and show how nearly the results predicted were obtained. I draw your attention particularly to the charts taken at the Mallinckrodt Chemical Works, lo-

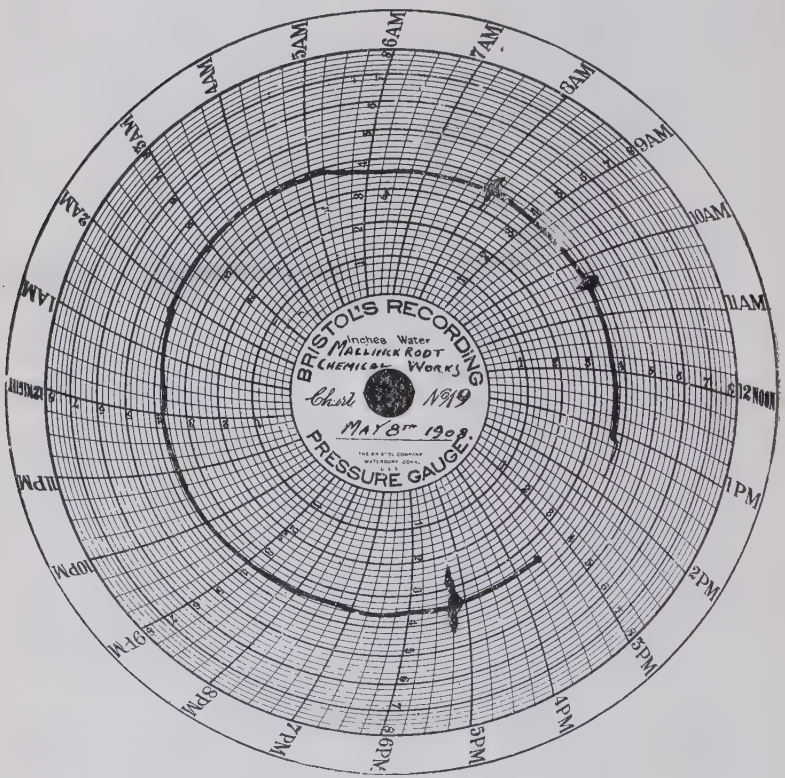

EXHIBIT "E" NO. 1.

cated within a block of the Broadway locations of the Exhibit "D" charts. During the year 1903, this Plant was forced to shut down on a number of occasions, owing to the inadequate supply of gas. At the present time the supply of gas in this district is well-nigh perfect, as the variation does not exceed 4/10 in. in 24 hours.

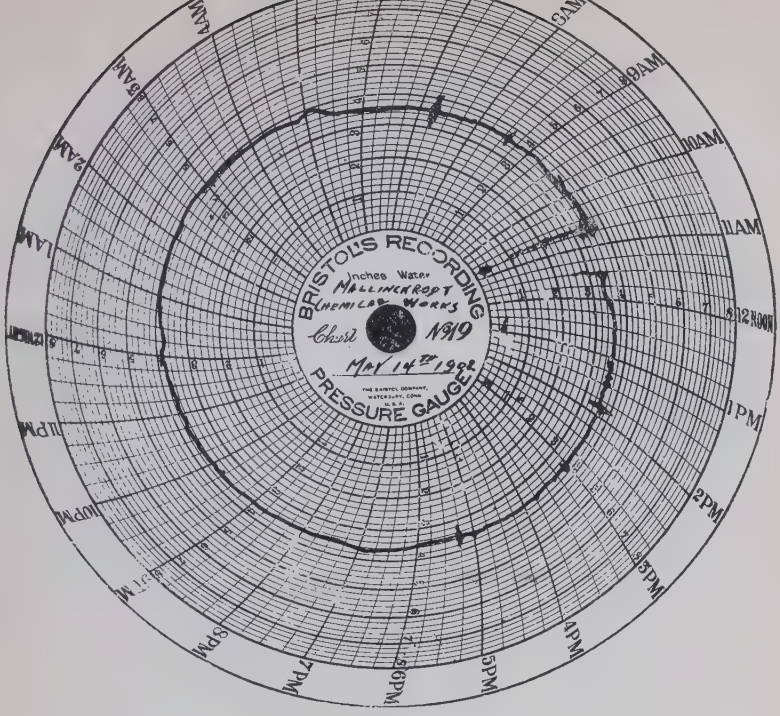

EXHIBIT "E" NO. 2.

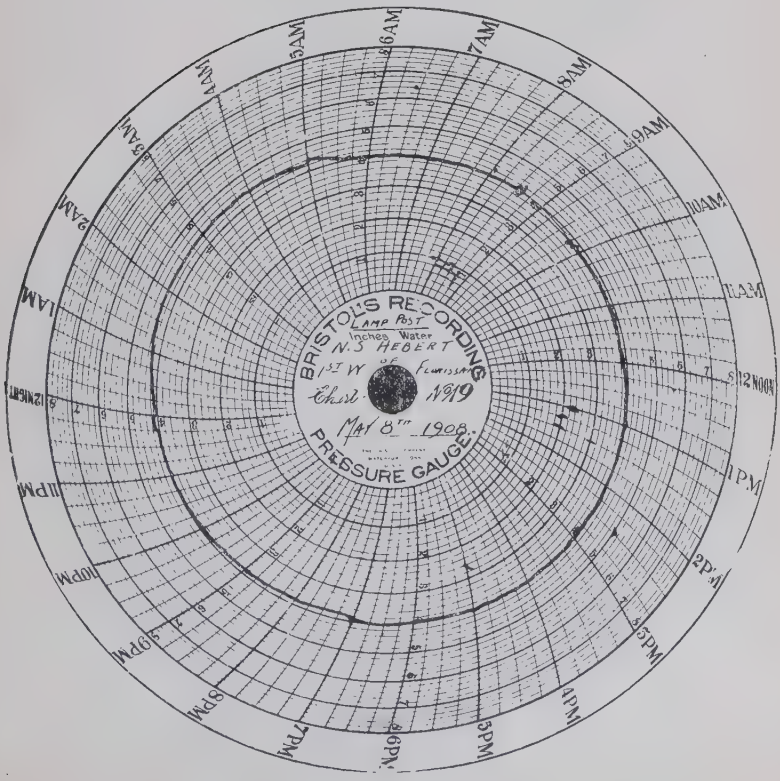

EXHIBIT "E" NO. 3.

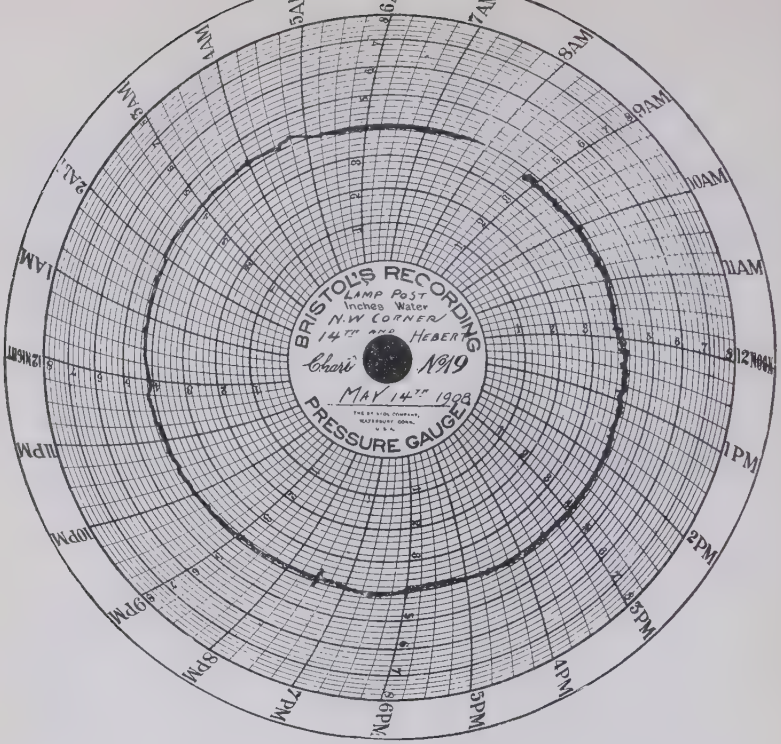

EXHIBIT "E" NO. 4

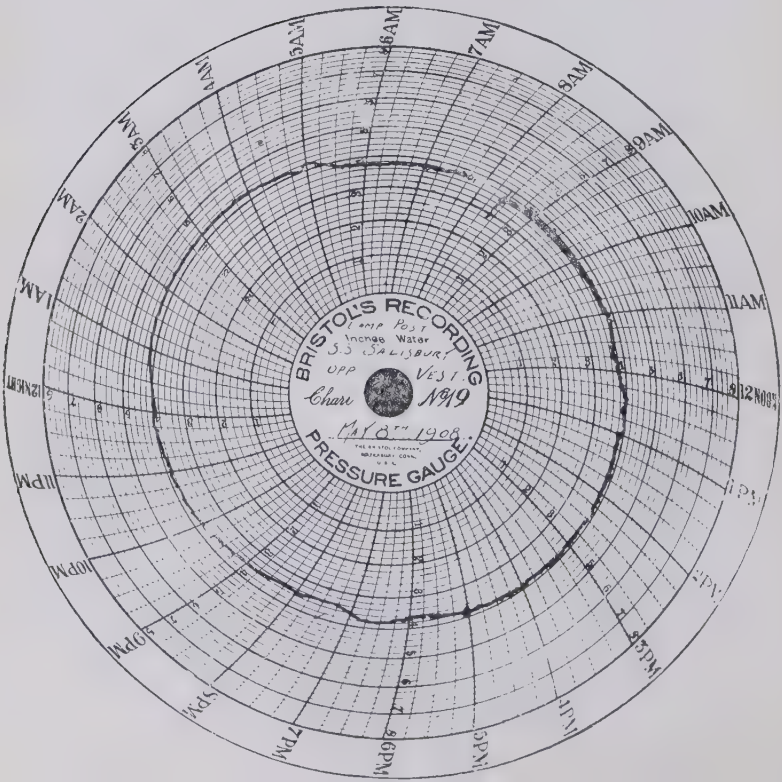

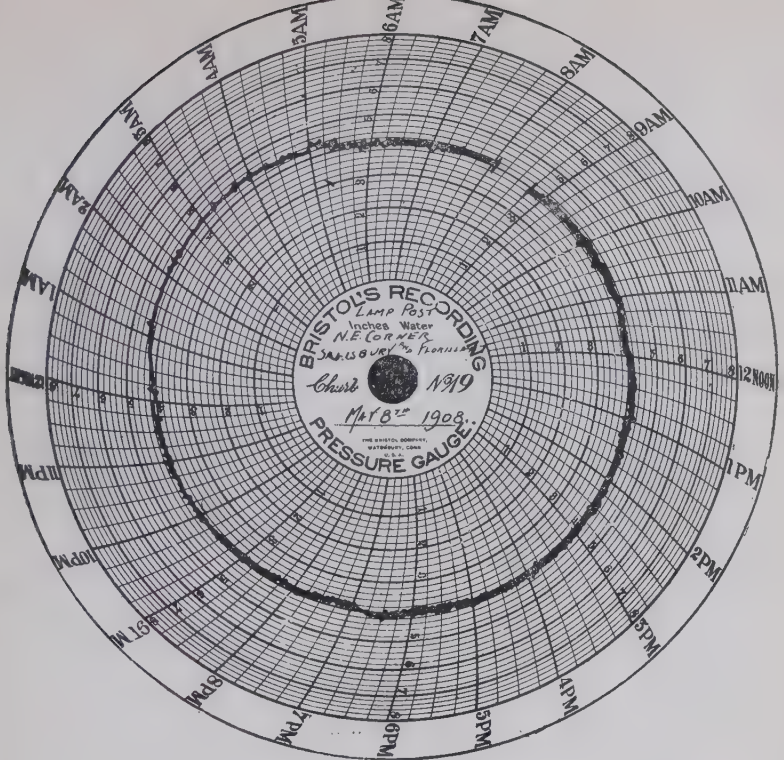

EXHIBIT "E" NO. 6.

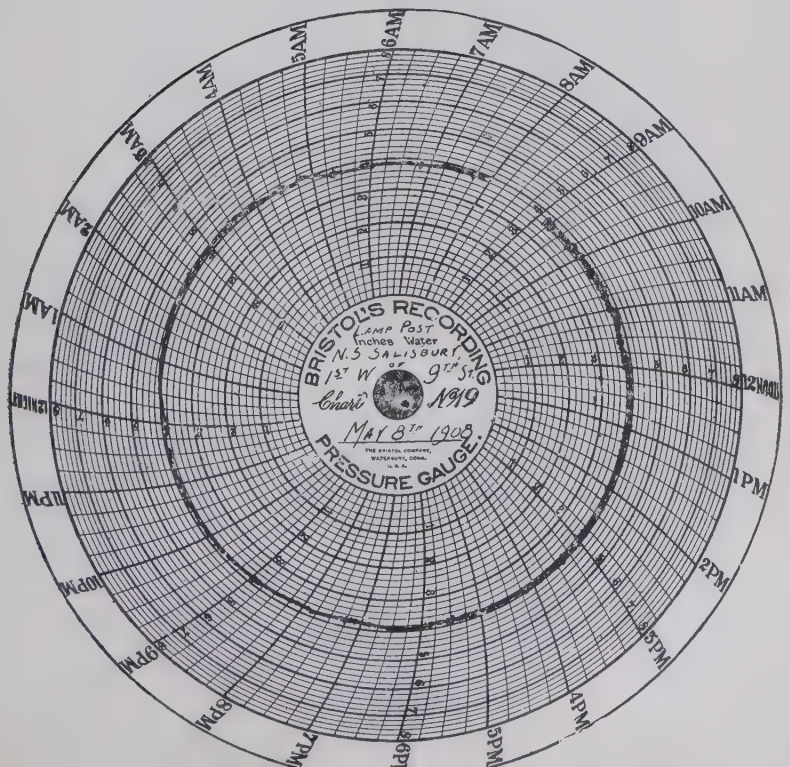

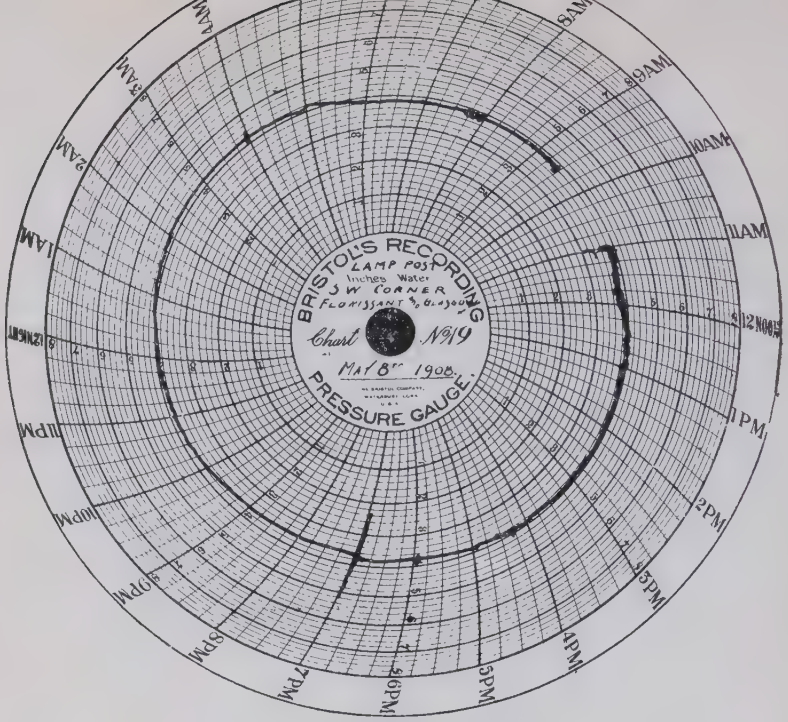

EXHIBIT "E" NO. 8.

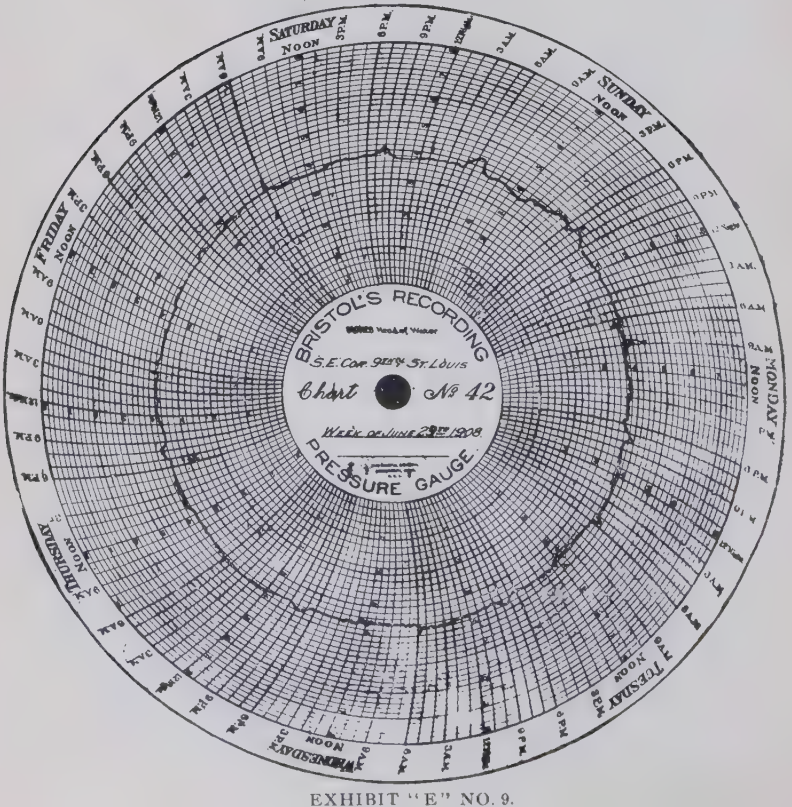

EXHIBIT "E" NO. 9.

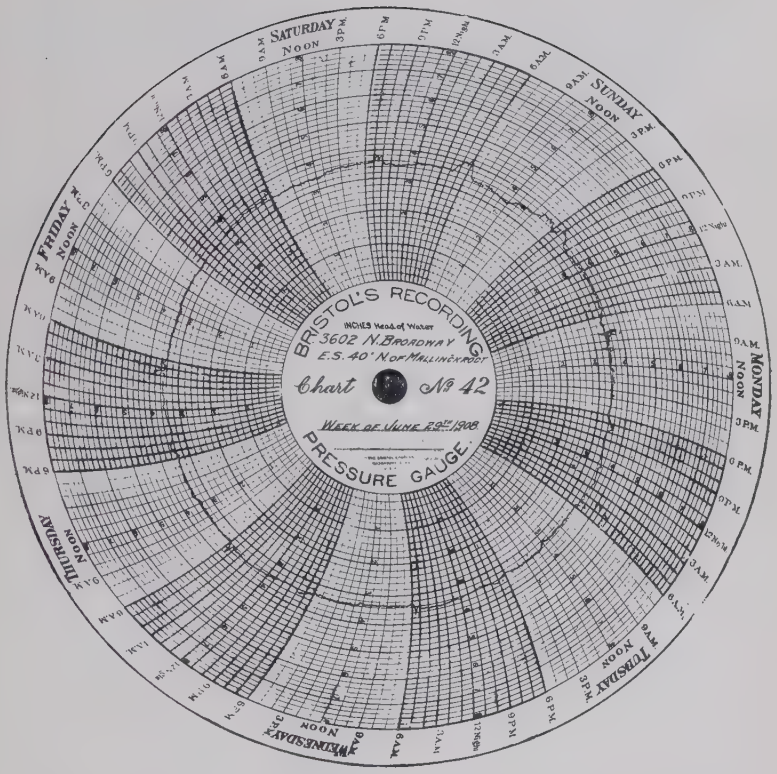

EXHIBIT "E" NO. 10.

The territory in St. Louis at present supplied now covers an area of over 36½ square miles, and the service rendered is satisfactory in all parts of the territory where the method as described above has been applied. When the system is extended to the entire city it is fair to assume that the variations in pressure will be under the strictest control, except, of course, where elevations of the ground surface are sufficient to cause excessive variations.

Exhibit "F" is intended to show an ideal system for a square mile where buildings face all four sides of each city block.

Mr. Cowdery originally estimated for St. Louis that the supply for every square mile should be based on a peak load

of 100,000 cu. ft. per hour. While this may seem excessive to some, the principles involved are the same whether we assume this figure or some other.

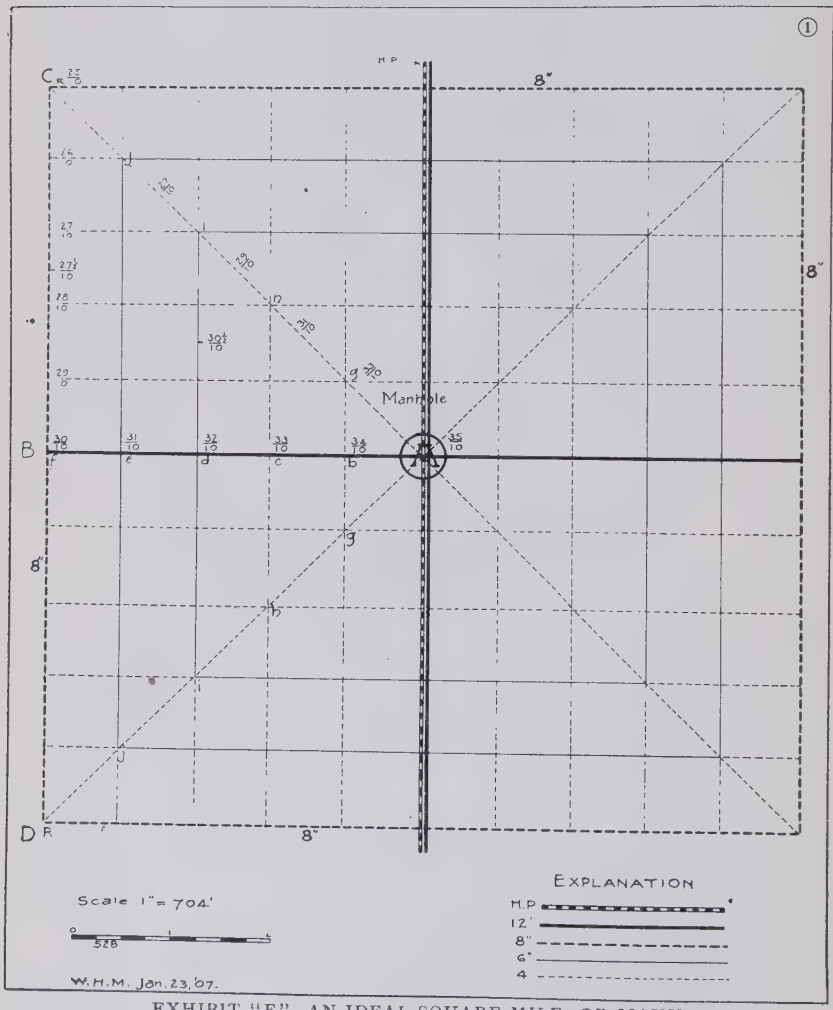

EXHIBIT "F"—AN IDEAL SQUARE MILE OF MAINS.

The ideal square mile as shown on Exhibit "F" is a modification of that shown on Exhibit "B." It is to be noted that the two squares immediately surrounding the manhole are

made of 4-in. pipe, the following two squares are made of 6-in. pipe, whereas the outside or mile square is made of 8-in. pipe. Bisecting the square, there are two mains at right angles, each 12 in. in diameter.

Such a system will handle a peak load of 100,000 cu. ft. per hour with a variation of not to exceed one inch of water pressure from maximum pressure to minimum pressure at any time in 24 hours, exclusive, of course, of variations caused by difference of elevation. This variation will only be for a short time at peak load and will be practically uniform throughout the balance of the 24 hours. The pressures that may be expected at peak load are shown on the exhibit.

It is obviously not practicable to adapt this system to an existing system in its entirety. The problem consists in first locating the proposed manholes at various points in the system as near one mile apart as practicable, taking advantage of the existing large mains, and then laying out a belt line which will connect all of the holders and manholes.

The question naturally arises—"Was the system, as installed, the most economical that could have been designed?" This question can best be answered as follows:

Taking the low-pressure mains in the square mile as shown on Exhibit "F," where all streets are covered with mains, we find the cost to be as follows:

Assume for simplicity the following unit prices:

12-in. main	$2.00 per ft.
8-in. main	1.25 per ft.
6-in. main	.90 per ft.
4-in. main	.60 per ft.

The total cost will then be as follows:

10,560 ft. of 12 in. main @ $2.00 per ft.	$21,120.00
21,120 ft. of 8 in. main @ $1.25 per ft.	26,400.00
29,568 ft. of 6 in. main @ $0.90 per ft.	26,611.20
54,912 ft. of 4 in. main @ $0.60 per ft.	32,947.20
116,160 ft.	$107,078.40

or an average of 92c. per foot. Of course where a number of square miles are supplied the amount of 8-in. per square mile will be reduced, as each mile of 8-in. will form the sides

of two square miles. It is safe to say that the mains shown on Exhibit "F" can be laid in any city comparable with St. Louis at a cost of $100,000.00 per square mile, or if 6-in. pipe is used instead of 4-in., the total cost per square mile should not exceed $120,000.00, and I believe in large cities that this would be the preferable thing to do for many reasons.

These mains can hardly be expected to do any more than supply the particular square mile in which they are located. The problem then is: "What is the most economical method of bringing a peak load of 100,000 cu. ft. per hour to the centre of each square mile?" A 24-in. main one mile long will deliver, at the far end, 117,000 cu. ft. of gas, with a drop of 1-in. pressure. A 10-in. main with 4 pounds initial pressure and 2 pounds final pressure will deliver the same quantity of gas through the same length of pipe. A 24-in. main, 4 pounds initial pressure, and 2 pounds final pressure will deliver 1,000,000 cu. ft. of gas per hour, through a distance of one mile.

While the actual saving is not exactly represented by these figures, yet it must be apparent to anyone that the advantage in first cost is altogether in favor of delivering the necessary gas through high-pressure mains.

For instance, in St. Louis, the cost of the strictly high-pressure mains was approximately as follows:

0.3 of a mi. of 30-in. main @ $31,680 per mi.	$9,504.00
14 mi. of 24 in. main @ $23,760 per mi.....	332,640.00
9.7 mi. of 16 in. main @ $18,480 per mi.	179,256.00
1.6 mi. of 12 in. main @ $10,560 per mi.....	16,896.00
3.4 mi. of 10 in. main @ $8,000 per mi.....	27,200.00
29.0 mi.	$565,496.00
13 manholes @ $2,500 each	32,500.00
Total	$597,996.00

or at the rate of $20,621.00 per mile.

It must be remembered that the following pipe:

1,500 ft. of 30-in. pipe,
47,834 ft. of 24-in. pipe,
23,105 ft. of 16.in. pipe,
1,037 ft. of 12-in. pipe.

would have been used in any event to connect together all the Works and holders. The total cost of this pipe was approximately $280,000.00. We should, therefore, deduct this sum from the total of $597,996.00, which would leave $317,996.00 directly chargeable to the strictly medium high-pressure distributing mains, which at $4.00 per foot would only have enabled us to have laid approximately 15 miles of 24-in. mains.

At the present time gas is being supplied to various portions of the city located from 4 to 7 miles from the nearest holder.

To supply even 70,000 cu. ft. per hour through a main 6 miles long, and allowing as much as 2-in. drop in pressure would take a pipe 24-in. in diameter. This one main would cost $21,120.00 a mile, or a total of $126,720.00, which is 40% of all the strictly high-pressure distributing mains which were actually laid to supply over one-half of the entire city, and when laid would only supply 70,000 cu. ft. per hour at peak load to one square mile located at its far end. The chances are that eventually holders would have had to be erected in these distant parts of the city, and the mains leading to them would probably have been as large as our present high-pressure belt lines. The belt lines having been once constructed, it is only necessary to run out 12-in. branch lines to the centre of any particular district to be reinforced, and a manhole installed to give the same effect as would be given if a gas holder were erected at that point.

An illustration of the value of the system is shown in the case of the 16-in. main running out Manchester Avenue to the point marked "City Limits," in the southwestern portion of Exhibit "C." This main is 4 miles long and supplies not only the 2 manholes located on Manchester Avenue, but the entire south one-half of St. Louis County, and ends at the high-pressure pumping station located in the town of Maplewood, at which point the gas is pumped to 30 pounds pressure and distributed throughout the County. The actual peak load delivered to the County station through this line at the present

time is 35,000 cu. ft. per hour. This may be increased to 70,000 cu. ft. per hour in the near future, not counting the gas consumed from this same line inside the City Limits.

A low-pressure main capable of taking care of this load, with a drop of 1 in. in pressure, would have a diameter of 26½ in., which would mean a 30-in. pipe, as this is the nearest standard size.

The present 16-in. pipe is capable of supplying, at the far end, with an initial pressure of 3 pounds and a final pressure of 1 pound, 180,000 cu. ft. per hour, so the present installation will take care of not only the County, but a large territory south of Forest Park for many years to come. The saving in investment in this case is obvious.

Another illustration is shown in the case of the 10-in. high-pressure line shown in the extreme northwestern portion of the city. Here it was necessary to supply the town of Walnut Park, located a distance of 3½ miles from the nearest manhole, shown at Union and Easton Avenues, and also the town of Jennings, located in the County, a distance of 2 miles beyond Walnut Park, or a total of 5½ miles from the Union and Easton manhole.

A 10-in. medium high-pressure main was run as far as the city limits, on Florissant Avenue, and manholes were installed as shown at Florissant and Bernays, and at Florissant and Robin Avenues. The territory in these localities was then supplied with low-pressure, 4-in. and 6-in. cast iron mains being used, while the far town of Jennings was supplied directly with medium high-pressure gas through wrought iron mains varying in diameter from 1½ in. to 6 in. and the consumers supplied directly through Johnson-Reynolds governors. With strictly low-pressure distribution it would have been entirely impracticable to have supplied these territories for some years to come. Exhibit "X" shows three pressure charts taken from the manhole at Florissant and Robin Avenues. It is our intention to convert this 10-in. main into a low-pressure main as soon as the city builds up in this section sufficiently to warrant the extension to it of our regular 5-pound belt line.

EXHIBIT " X " NO 1.

From the above it is apparent that from the standpoint of first cost, and service rendered to the consumer, there is no comparison between the system as installed and any system of low-pressure mains and holders which could have been installed, either in first cost or in operation.

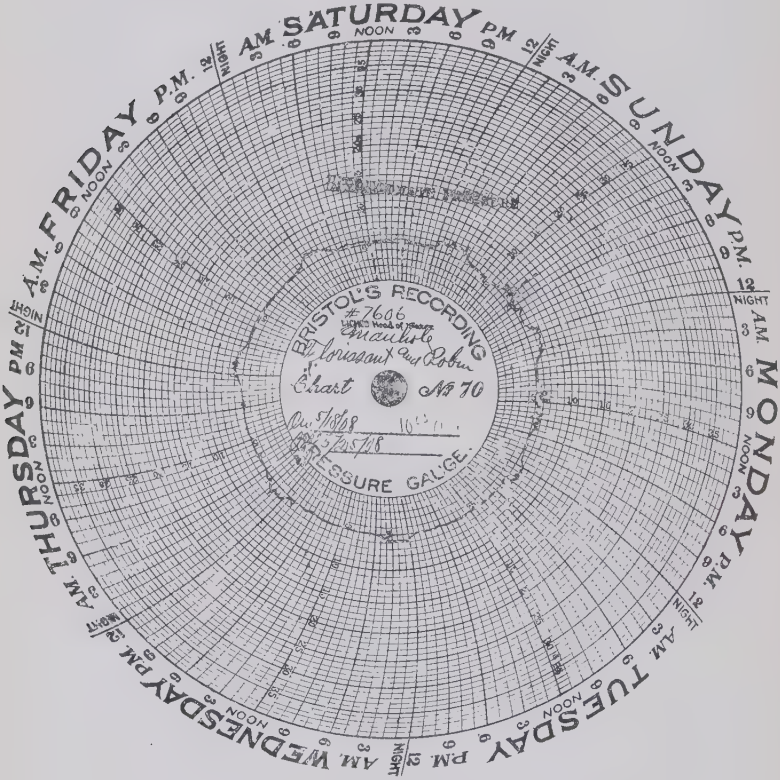

EXHIBIT "X" NO. 3.

We have still to determine the cost of operation and reliability of service. As to the latter I can only say that after five years of actual operation we have not encountered a single serious trouble.

A typical manhole with its installation of Johnson-Reynolds'

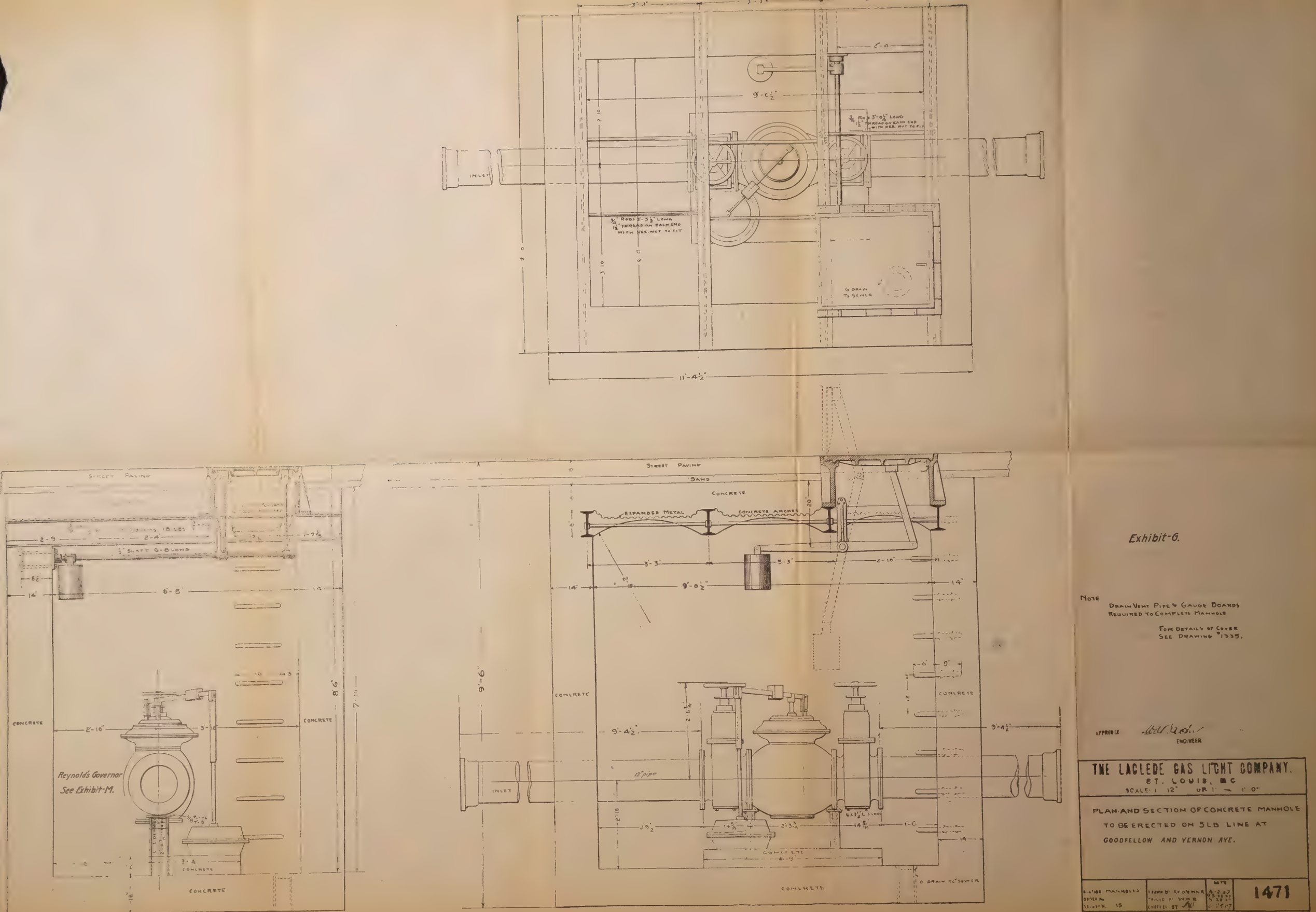

EXHIBIT "G"—Typical High-pressure Manhole, as used in St. Louis.

high-pressure single type governor is shown in Exhibit "G." Two men at present take care of fifteen manholes, and with the exception of some slight repairs occasionally, have little to do except to change the charts and keep the manholes and

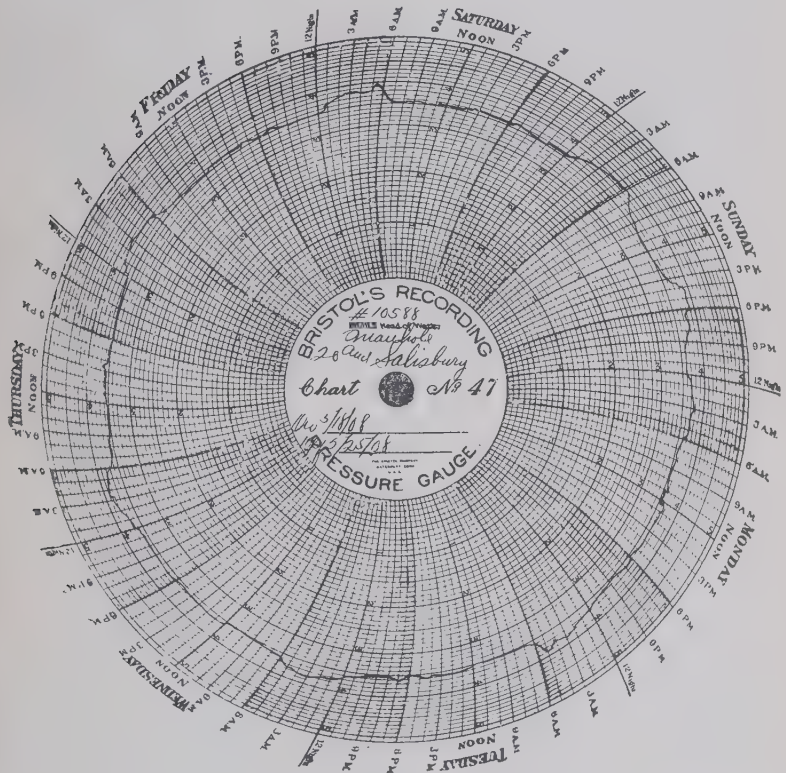

EXHIBIT "H" NO. 1.

apparatus clean. Originally a mercury type of governor was used, but was abandoned within a few months after its installation on account of its absolute unreliability.

Exhibit "H" shows typical high-pressure, intermediate pressure and low-pressure charts taken from the manholes. From

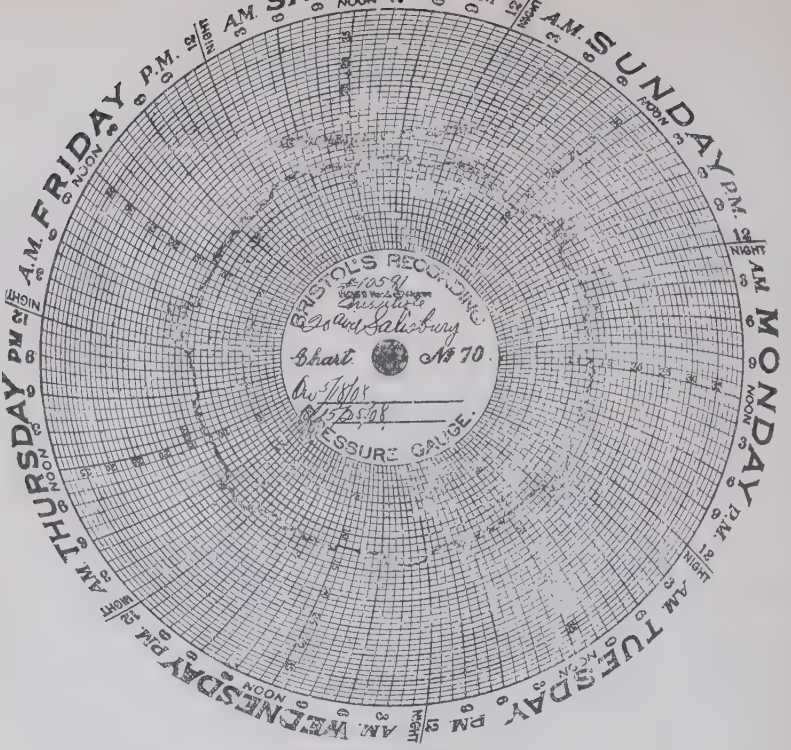

EXHIBIT "H" NO. 2.

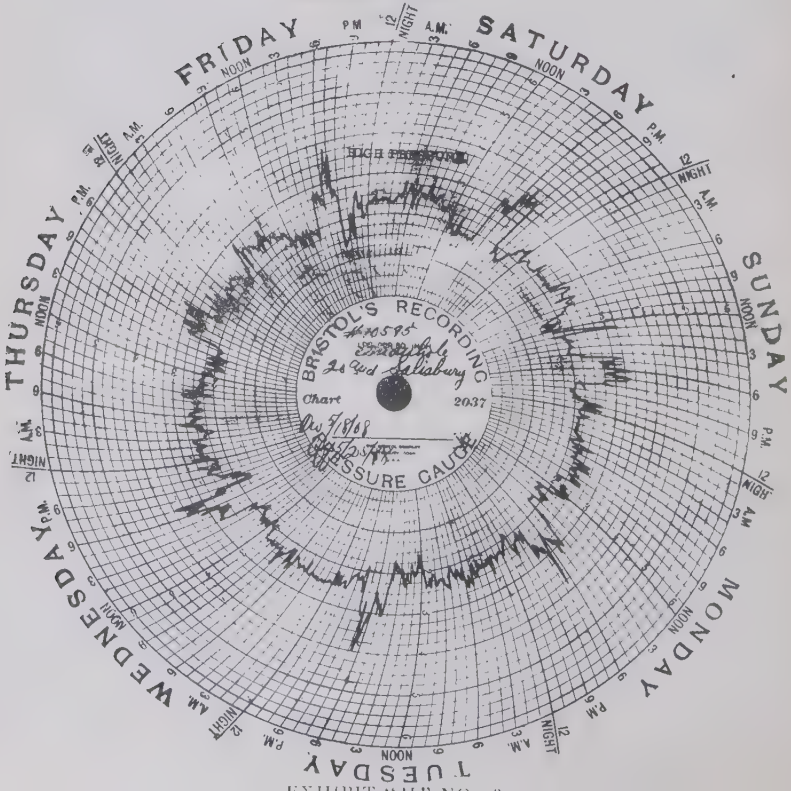

the high-pressure chart it will be seen how rapidly the pressures in the high-pressure lines fluctuate. The governors respond to these sudden changes perfectly, which was not the case with the mercury governor formerly used.

The worst trouble which we have had was due to valves which are located at various points along the line. Any valve which has the collar in the stuffing box attached to the spindle by a pin only, should not be used. The collar should be shrunk or recessed into the spindle or in some manner attached so as to remain tight at all times. On some of the valves that we have used, the collar slipped on the spindle and the man operating the valve would be misinformed as to the condition in which he left the valve. No trouble would be experienced until some other valve on the belt line was closed or opened, after which the pressures throughout the line would immediately make manifest that something was wrong on the line. This may seem like a trivial matter, but as a matter of fact it is of the utmost importance, and is the one really serious difficulty which we had to overcome.

To those contemplating installations of distribution systems such as described here, I would recommend that this valve question be given careful attention before deciding on any particular valve.

We have overcome the trouble somewhat by keeping a history card of every valve, showing every detail connected with it, and keeping a report of the number of turns which the valve is turned open or shut, every time the valve is operated. In addition to this, every valve is operated at least once a month. Even with this care we have trouble with the valves.

A history card is also kept of every diaphragm and every valve in the manhole. I believe that one of the elements of our success with this system has been due to the very great care given to all of the small details, valves, drips, diaphragms, gauges, etc.

One would naturally expect that there was an element of danger in a system such as here described, owing to the fact that it might be possible for a governor to break or in some

other manner allow high-pressure gas to go into the low-pressure system, but the greater number of manholes that are installed, and the more gas that is distributed through the high-pressure system, the less danger there is from this source. For instance—suppose that one of our manholes in some manner broke and allowed high-pressure gas to get into the low-pressure system. As soon as this happened the gas at the outlet of all other governors in the system would rise, and all other governors would immediately close. Therefore the whole city would be supplied through the outlet of the one governor. The pressure in the system of mains would, therefore, rise gradually and any damage could hardly result. The men at the various stations would in a very short time detect any cases of pressure which might be built up, and if the pressure continued to rise to the point where it was evident that something was wrong on the line they would immediately stop some of the blowers and reduce the pressure in the high-pressure lines. It is difficult to understand how anything very serious could happen, especially on the new type of governor, as the higher the pressure gets in the low-pressure mains, the stronger is the tendency to close the valves.

Pumping Plants are maintained at four different points, as follows:

At Station "A" there are four simple slide valve Erie steam engines, direct connected to four rotary Root blowers, having a displacement of 20 cu. ft. per revolution, and a speed of 225 revolutions per minute. The capacity of this Plant is about 750,000 cu. ft. per hour.

At Station "B" we have one unit the same as at "A," and, in addition, have one 250 H. P. simple Allis Chalmers Corliss steam engine belted to one Root positive blower, having a capacity of 450,000 cu. ft. per hour against 5 pounds.

At Station "G" there are two Nash gas engines, 150 H. P. each. They are 3-cylinder, 4-cycle, single acting, and are gear connected to a rotary blower which has a capacity of 56 cu. ft. displacement per revolution. The gas engines run 250 revolutions per minute. The capacity of the plant, with both engines, is 500,000 cu. ft. per hour against 5 pounds pressure.

At Station "H" there is one Westinghouse, horizontal, 2-cylinder, double acting gas engine direct connected to a blower having a displacement of 50 ft. per revolution. The gas engine is self-regulating, between 90 and 180 revolutions per minute, and is rated at 300 H. P. The capacity of the plant is about 450,000 cu. ft. per hour.

It is, therefore, hardly likely that the service could be interrupted from a break-down of machinery.

It is remarkable how well the governors act even when the pressure drops to a very low point. At the time of the balloon races in St. Louis we made the experiment of dropping the pressure in the high-pressure mains until at the far distant points the pressure at the governor was only 3 in. of water. The pressure was then brought up to 5 pounds, and even with this great extreme in pressures the chart located at the outlet of the governor showed a perfect circle.

At first we experienced some difficulty in pumping our drips, but we have since equipped each drip riser with a lever handle cock, which has satisfactorily overcome all trouble from this source.

The following drip record for 1907, may be of interest as showing the relation between the quantities of drip water taken from drips located on the low and high-pressure mains:

Drip Record, 1907.

	Drips in Use	Visits Made	Gallons Pumped	Tons Pumped	Total Cost	Cost per Drip in Use
Low pressure	2,336	4,983	166,840	695.17	$2,737.70	$1.17
High pressure	76	4,783	820,781	3,419.92	2,640.65	34.64
Total	2,412	9,766	987,621	4,115.09	$5,378.35	$2.23

Actual Pumping Cost.

LABOR:	2 men 6,223 hours @ 25 cents...		$1,555.75
	1 man 1,120 hours @ 22½ cents..		252.00
	1 man 2,835 hours @ 20 cents...		567.00
		Total	$2,374.75
TEAMS:	1001.2 double teams @ $3.....		$3,003.60
		Total cost pumping	$5,378.35

The above costs are exclusive of the cost of supervision or clerical work.

As to the final question, namely, the cost of operation, it is very difficult in our case to separate that portion of the cost of operation, installation, etc., necessitated by the belt line and manhole system of distribution from the similar costs which are necessitated in any event for the purpose of supplying the outlying holders, etc.

It must be borne in mind that had any system of low-pressure distribution been adopted the large low-pressure mains would not have been run from the Works to the districts in which the gas was needed but would have been run from existing holders nearest to such districts, or if found advisable, additional storage holders would have been erected at suitable points, and these holders would have been connected to the Works by the high-pressure pumping lines, and low-pressure extensions would then have been made from these holders. This point is very important as bearing on the amount of gas that would have to be pumped by adopting the manhole system of distribution as compared with any other system of trunk lines and holders supplying low-pressure mains. The only difference would be that in the manhole system the gas would pass directly from the Works into the belt line, thence into the manhole, at which point it would be distributed through low-pressure mains at distances approximately one-half mile from the manhole, whereas in the trunk line and holder low-pressure distribution the gas would be pumped from the Works into the high-pressure mains leading to the holders, from which point the gas would be distributed by means of low-pressure mains at distances from one to four miles from the holder. The amount of gas actually pumped will undoubtedly be greater in the manhole system, but not as much greater as might appear at first glance.

Another important point that must be taken into consideration is the fact that as a rule it is only at peak load when all of the manholes are in active operation. During the periods of low consumption very little gas passes through the man-

holes. The result of this is that the same machinery that is employed during the average and low-pressure loads to supply the holders may be utilized for supplying the manholes at peak load, by simply closing the valves leading to the various storage holders.

The cost of pumping the gas from the various pumping stations is approximately 5/10 of a cent per M. As stated above, it is practically impossible to figure out just how much additional gas is pumped, using the manholes, over and above what would have been pumped had holders and low-pressure mains been used. It is probable that the amount does not exceed 33⅓% of the total. This would be for the year 1907, 33⅓% of 4,000 million equals approximately 1,300,000,000 cu. ft. If we allow 1/10 of a cent per M. of the total send-out for interest and depreciation, it will certainly cover the interest and depreciation of all such additional machinery and buildings as would be necessary solely on account of the manhole system. We should, therefore, charge against operation the following amounts:

5/10 c. per M on 1,300,000,000 =	$6,500.00	
1/10 c. per M on 4,000,000,000 =	4,000,00	
	$10,500.00	$10,500.00
Attention to manholes: 1 man @ $1,020.00 per yr.		
1 man @	600.00 "	
Supervision and maintenance ..	780.00 "	
	$2,400.00 "	2,400.00
		$12,900.00

Assuming 7% for interest and depreciation, this amount would represent an investment of approximately $185,000.00 which could be expended for low-pressure mains. At $4.00 per ft. this amount would only be sufficient to lay less than 9 miles of 24-in. main.

The total cost, therefore, of the high-pressure system is:

Mains	$317,996.00
Investment for operation	185,000.00
Or a total of	$502,996.00

or 12½c per 1,000 cu. ft. annual sales.

It is also important to note that the present installations, both as regards high-pressure mains and machinery, will have a capacity of almost double our present needs when certain few extensions which are contemplated will have been completed.

Summarizing the advantages and disadvantages obtained by the St. Louis method of distribution we have:

Advantages.

1st. The investment needed to change the existing low-pressure system of distribution to the manhole system may be as gradual as desired, by extending the belt line only as needed.

2nd. Advantage can be taken of existing low-pressure mains, and also of present pumping lines between the Works and holders by making them a part of the future belt line.

3rd. The belt line having been once installed, any low-pressure district can be reinforced either by installing a manhole on the belt line, if the low-pressure district happens to be contiguous with the belt line, or a branch or separate main can be run from the belt line to the centre of the low-pressure district and a manhole installed at comparatively small expense.

4th. The total investment is decidedly very much less for this system than for any other system contemplating low-pressure trunk lines and holders.

5th. The storage capacity can be grouped at central stations, resulting in greater economy than where the holders are installed at various points throughout the city.

6th. Complaints of low-pressure are absolutely done away with.

7th. The pressure being automatically regulated, sudden fluctuations in the load, such as, for instance, dark days or fogs, are taken care of. In St. Louis this frequently happens in the business sections of the city, while the balance of the city is still bright.

8th. Advantage can be taken of the fact that different sections of the city frequently have their peak loads coming at

different hours. For instance, the peak load in the manufacturing districts is not always coincident with the peak loads in the better residential sections of the city. This peak load is taken care of automatically. If holders were installed the pressure regulation from the holders is only available for the particular vicinity supplied by that holder, whereas in the belt line system no greater capacity is needed to take care of the variation in the peak load in the different sections, as each district draws its gas from its local manhole, which in turn is supplied from the belt line.

9th. Sparsely settled districts can be supplied directly from the belt line and the advantages of straight medium high-pressure distribution obtained.

10th. It is possible to first supply distant territories through medium high-pressure mains which can be converted to low-pressure mains at a very small expense, should this prove desirable at some future date.

11th. The holders, works and manholes all being under the strictest control, advantage can be taken to fill holders in a very short time at the periods other than peak load by pumping from any works or pumping station to any holder.

12th. The gas being very much dryer than in the ordinary low-pressure distributing systems, the expense of pumping drips in the far outlying sections of the city is very much decreased. The record for the year's pumping for 1907 has already been given in this paper.

13th. Exceptionally large consumers in the portion of the city near the high-pressure lines can be taken care of with very small expense by utilizing the high-pressure gas.

14th. It is not necessary to pump against a maximum pressure of 5 pounds, except at small periods of peak loads. The average pressure pumped against in St. Louis for the past year is between 3 and 3½ pounds.

15th. It is possible to locate the Works at a considerable distance from the city where property is of less value than at points near the city or inside the city.

16th. The investment for holders can be decreased, or else postponed for a number of years.

Disadvantages.

1st. The extra cost of pumping gas, including interest and depreciation on pumping machinery.

2nd. Slightly decreased candle power in the gas.

3rd. The operating cost of the manholes. In St. Louis two men take care of fifteen manholes.

4th. Owing to the fact that the pressure from the manholes is automatically regulated it follows that during the period of "No load", as for instance during the night, the pressure throughout the district controlled by the manhole will gradually increase until it reaches the same pressure as that maintained in the manhole, therefore maintaining an unnecessary high-pressure which may under certain circumstances increase leakage. I do not consider this pressure a very serious disadvantage.

5th. Greater danger in case of leaks on the high-pressure lines.

At the present time the territory bordering on the city limits is supplied with low-pressure, and the suburban towns beyond are supplied with gas at 30 pounds pressure, using individual governors, as is customary in strictly high-pressure distribution. It is contemplated that as the city grows and extends to the high-pressure districts the small wrought iron mains will be replaced as rapidly as they deteriorate with cast iron mains, which will then form a part of the standard system as applied in the city proper.

It is thus evident that we are taking advantage of all classes of distribution, from the ordinary well-known low-pressure to the strictly 30 pound high-pressure.

In actual practice it is not necessary to lay all of the mains shown on Exhibits "B" and "F," as there are many streets where it is not necessary to lay mains at all, and again there are streets which are built up with such a class of business that 6 inch mains might be placed where 4 inch mains are called for on the exhibit.

Small Cities.

The system is applicable to any city where the number of services per mile of main is sufficient to justify low-pressure

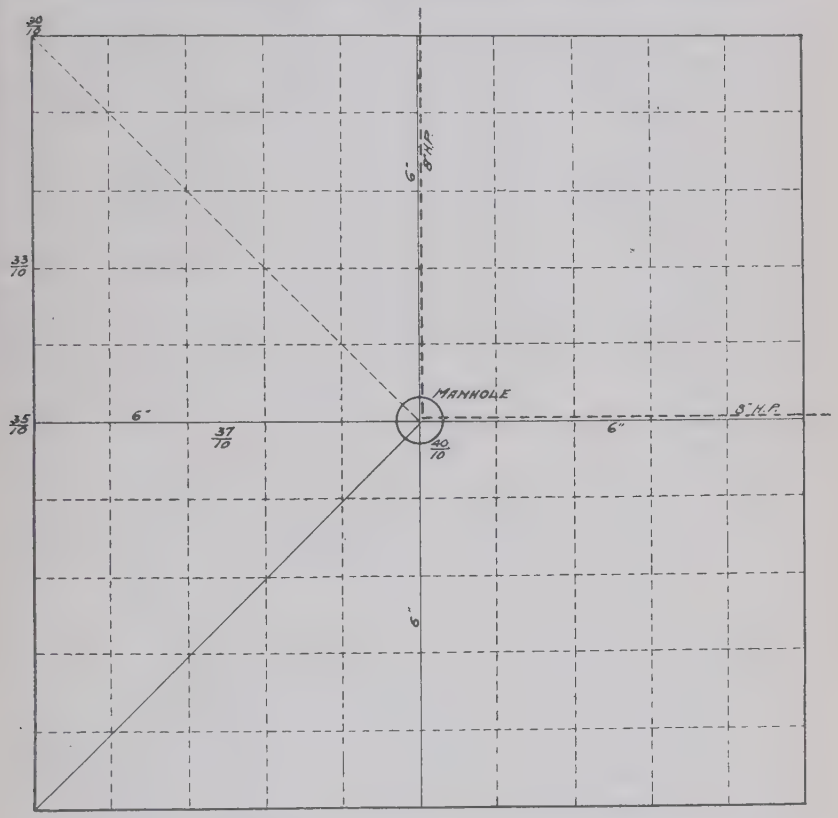

PLAT SHOWING L.P. & H.P. MAINS. FOR SUPPLYING IDEAL SQ. MILE OF TOWN SHOWN ON EXHIBIT "K"

EXPLANATION.

8" C.I. H.P. - - - - - - - - -

6" C.I. L.P. ———————

4" C.I. L.P. - - - - - - - - -

ALL MAINS LAID WITH CEMENT JOINTS.

EXHIBIT "J" —IDEAL SQUARE MILE FOR MEDIUM SIZE TOWNS.

distribution. The size of the belt line and the general layout of the unit square mile would be dependent on local conditions and the characteristics of the city.

If we assume, for instance, a city of 40,000 inhabitants in an area of six square miles the annual sales would be approximately 160,000,000 cubic feet per annum. Assume number of consumers as 8,000, giving a peak load of 120,000 cu. ft. per hour.

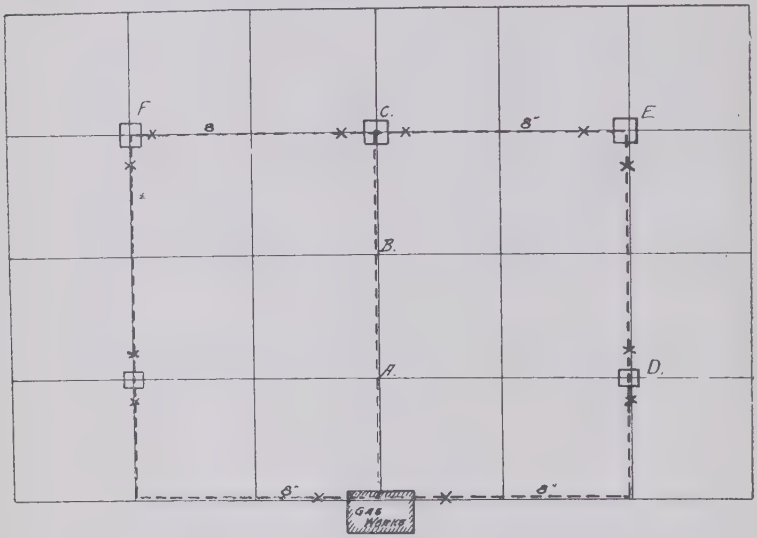

H P MAIN SYSTEM FOR IDEAL CITY OF 40000 POPULATION AREA 6 SQ. MILES IN PRACTICE AN 8" H.P MIGHT BE LAID FROM WORKS TO "C" AND MANHOLE INSTALLED EITHER AT "A" OR "B" AND OMITTED AT "C" OR A 12" LOW PRESSURE MAIN RUN FROM WORKS TO "C" DEPENDING ON LOCAL CONDITIONS.

EXPLANATION.
8"C.I. - - - - - - - - -
6"C.I. L.P. _____
ALL MAINS LAID WITH CEMENT JOINTS.
X = VALVES

EXHIBIT "K"—IDEAL BELT LINE FOR MEDIUM SIZE TOWN.

Exhibit "J" shows a square mile of such a city, having eight blocks to the mile, and consumers on each side of the block. This city can be supplied with 6 inch low-pressure mains laid every half mile in both directions, and all other low-pressure

mains 4 inches in diameter. A manhole would be located in the center, as shown on Exhibit "J".

A belt line 8 inches in diameter, as shown on Exhibit "K", would supply 52,000 cu. ft. of gas at manhole "D", located one and a half miles from the Works, with 5 pounds initial pressure and 3 pounds final pressure. Allowing 3 pounds pressure at "D" and 2 pounds of pressure at "E," the mile of 8 inch between these two manholes is sufficient to convey over 40,000 cu. ft. of gas. The manhole at "C" would be fed from "E" and "F", so that the 8 inch main would be ample to supply the entire city.

The total cost of a distributing system such as the above, with pipes on every street, would be approximately as follows:

29 mi. of 6 inch pipe at $4,200.00 per mi.....	$121,800.00
96 mi. of 4 inch pipe at $2,640.00 per mi.....	253,440.00
7 mi. of 8 inch pipe at $5,000.00 per mi.....	35,000.00
5 manholes at $1,000.00 each.....	5,000.00
Grand total.....	$415,240.00

which is at the rate of approximately $69,200.00 per sq. mile, or $3,460.00 per thousand peak local capacity.

The above investment in high-pressure mains can be materially decreased by increasing the pressure at the Works to six, seven or even eight pounds to the square inch. This need only be done during peak load. For instance, with 7 pounds at the Works and 4 pounds at manhole "D", one and a half miles away from the Works, over 70,000 cu. ft. of gas per hour can be supplied through an 8 inch main, or 35,000 cu. ft. per hour through a 6 inch main.

When we reach cities of from 15,000 to 20,000 inhabitants it is apparent that no size mains need be used other than 6 inch and 4 inch mains, so that by cutting out such reducing fittings as 6 x 4 tees and 6 x 4 crosses, etc., the Storeroom stock need consist only of 4 inch and 6 inch drips, crosses, tees, bends, and 6 x 4 reducers, thus reducing the interest charge for stores to a minimum. This system can be easily fitted into any existing system at present operated with low-pressure. It can be operated on a medium high-pressure basis of from 2 to 5 pounds,

should this be desirable. Personally, however, I do not advise even medium high-pressure for cast iron mains less than 6 in. in diameter, nor mains less than 4 inches in diameter, for any

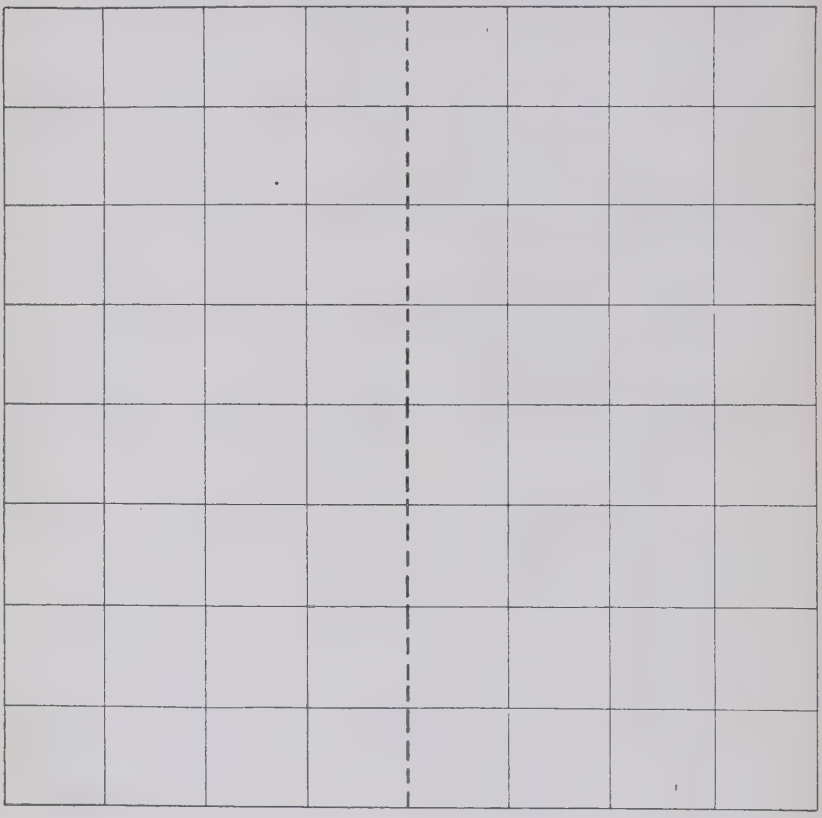

MAP SHOWING SYSTEM OF MAINS. FOR ONE SQ. MILE OF IDEAL CITY SHOWN ON EXHIBIT "K."

EXPLANATION.

8" H.P. - - - - - - - - - -

ALL OTHER MAINS 2" W.I.

EXHIBIT "L" IDEAL SQUARE MILE, HAVING A TWO INCH WROUGHT IRON MAIN DISTRIBUTION SYSTEM.

pressure. It is true that 3 in. and even 2 in. mains are perfectly satisfactory under many conditions, but if it is desired to lay mains of this size it will be best to use

2 inch and 3 inch wrought iron pipe. In the City of Beloit this is being done. All service connections are equipped with individual house governors, and future extensions are made with 2 inch wrought iron pipe. The pressure is raised at the Works as needed to carry the load. Exhibit "L" shows the town represented on Exhibit "K" as being supplied by this method. The belt line from the Works is 8 inches as before. All other streets in the city are provided with 2 inch mains. The cost of such a system, with 2 inch mains on every street, would be as follows:—

7 mi. of 8 in. pipe at $5,000. per mi.....	$35,000.00
125 mi. of 2 in. W. I. pipe at $1,320. per mi.....	165,000.00
Excess cost of 8,000 services equipped with governors, over and above similar cost for low-pressure services, estimated at $4.50 per service	36,000.00
Total.....	$236,000.00

which is an average of $39,333.00 per square mile.

I refer you to a paper read by Mr. Traver, Engineer of the Grand Rapids Gas Company, before the Michigan Gas Association, in September 1906. In Beloit, Wisconsin, all services were equipped with individual governors at one time, whereas in Grand Rapids the change is being made gradually, starting at the Works and extending farther out towards the city limits year by year.

It does not seem advisable to the writer to use wrought iron pipes in large cities or in any corrosive soil, or where there is a chance of electrolytic action.

The advantages of using wrought pipe, and pressures at from 2 to 6 pounds are as follows:—

1st. Decreased investment on account of the small wrought iron mains used.

2nd. Ability to give ample pressure at every consumer's meter.

3rd. Ability to utilize a simple blower for compression or pumping purposes.

Small Towns.

But in very small towns, or in towns where the consumers are scattered, the consumption is not sufficient to pay a reason-

able return, even on the investment necessary to install a system of 2 inch wrought iron mains operated at 2 to 5 pounds pressure. It is in such places where high-pressure distribution in its strictest sense finds its best application.

The distribution of gas at high-pressure in small villages and

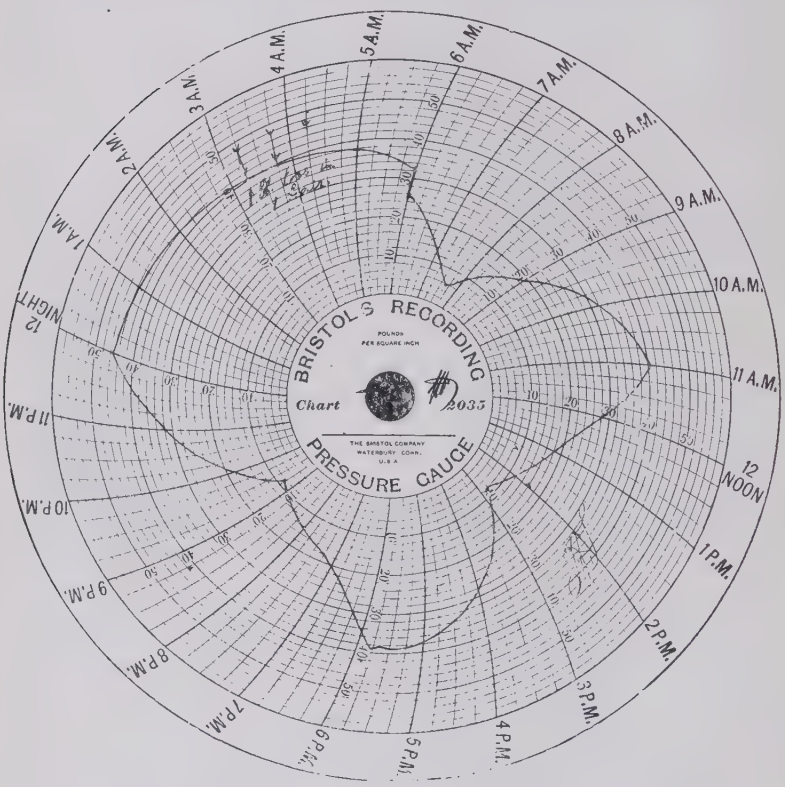

EXHIBIT "I"—TYPICAL CHART, SHOWING PRESSURE AT OUTLET OF COMPRESSORS OF ST. LOUIS COUNTY GAS COMPANY.

medium size towns is no longer an experiment but is a demonstrated, practical and efficient proposition, as is clearly evidenced by such installations as those described in the various papers read before the various gas associations in this country by Mr. Frederick Shelton, Mr. E. C. Jones, Mr. J. D. Shattuck, Mr. G. F. Goodnow, Mr. H. L. Rice, and many others.

The St. Louis County Gas Company's installation, with which the writer is most familiar, supplies approximately 1,800 consumers through some 60 miles of mains, a greater part of which are 1¼ inches in diameter, under pressure varying from 15 to 45 pounds. The peak load on this system is at present about 37,000 cu. ft. per hour, which may be doubled in the near future. From this it would appear the hourly peak load is approximately 20 cu. ft. per hour per consumer. Most of the gas is used for cooking purposes. Practically no trouble has developed in the operation of this system. There have been several cases of pipes being eaten out by electrolysis, and in the beginning a number of the gas seals blew.

Exhibit "I" shows a pressure chart taken at the Pumping Station, from which it is seen that the entire system is absolutely gas-tight, there being no actual leakage whatever. This is shown from the fact that during the hours of lightest consumption the pressures drop only a very slight amount, which has all been accounted for by a small number of street lamps, together with the various pilot lamps which are lighted during the night.

The disadvantages of high-pressure are:—

1st. The loss of candle power and B. T. U.'s as pointed out in the answers bearing on this question in the appendix belonging to this paper.

2nd. The cost of pumping.

3rd. The shorter life of the wrought iron pipe.

4th. The increased expense due to the need of inspecting each consumer's governor, etc., once every six months, and which we estimate in St. Louis as being equivalent to 30 cents per consumer per year.

5th. The increased danger of high-pressure, which from the answers bearing on this subject in the appendix would not seem to be very serious, especially in the smaller towns and cities.

There is still another objection, which to my knowlege has never before been mentioned, namely the uncertainty of knowing what pressure exists at the consumer's meter at any particular time.

It has always been assumed that the pressure at the outlet of the governor is a perfect circle. This impression is probably due to the fact that gauges are usually installed at certain points on the distribution line, generally in one of the Company's offices or Works. As soon as this governor shows a variation on the chart the chances are the valves are cleaned and the governor put in proper condition again, but this cannot be done as thoroughly at the consumer's residence. If a series of charts be placed at random on high-pressure mains the charts will not show as perfect a circle as we have been led to believe. Our own experience in St. Louis County has borne out this fact, and the charts I have received from various sources where high-pressure is used tell the same story. So long as the number of consumers is not excessive, as is the case in the majority of communities so supplied, it is possible to be reasonably certain that the pressures are practically uniform, and the governors operating properly, still you cannot be absolutely sure that this is true at any time. I am satisfied that charts taken at random on a low-pressure distribution system will show up better than those taken on a high-pressure distribution system, both systems being in first-class condition.

Field for High Pressure Distribution.

I do not believe it economically practicable to supply strictly high-pressure distribution to cities having as many as 40,000 inhabitants, for the reasons mentioned above, namely,

1st. Shorter life of wrought iron mains, due to electrolysis and corrosion.

2nd. Greater danger in case of leakage from the high-pressure mains, and greater chance of having such leakage develop suddenly.

3rd. Increased expense of pumping the gas.

4th. Increased cost of inspection.

5th. The uncertainty existing at all times as to the pressure being carried at any meter.

In order to determine under just what conditions high-pressure distribution is advisable, many factors enter into the prob-

lem. It is not sufficient to make a decision on the basis of the number of cubic feet sold per mile of main, but consideration must be given to the fact as to whether this gas is sold to a few consumers or to a large number of consumers.

If we let A=the cost of pumping gas, including interest, depreciation and operation.

B=the excess cost of maintenance per consumer per year, with high-pressure service over the similar cost for low-pressure service.

C=the excess cost of investment of the high-pressure service, including governor, seal, etc., over the low-pressure service.

D=the average cost of one mile of high-pressure main.

E=the average cost of one mile of cast iron low-pressure main.

F=the average number of thousand cu. ft. per consumer per year.

G=the number of consumers per mile of main.

Assuming interest at 5%; interest and depreciation on cast iron mains at 6%; interest and depreciation on wrought iron mains at 10%. Then in order that the advantage of both systems may equal, the following equation must be satisfied:—

$$G\times F\times A+G\times B+C/10+D/10=6\times E/100.$$

Experience in St. Louis indicates that the excess cost of maintenance of high-pressure consumer over low-pressure consumer is equal to approximately 30c per consumer per year. The excess cost of a high-pressure service over a low-pressure service is approximately $4.00 per service.

Assuming the size of the average high-pressure main 1½ in. in diameter to cost $850.00 per mile, and the average size of low-pressure cast iron mains to be somewhat in excess of 4 in., and to cost $2,250.00 per mile, we will then have:

B= .3
C= 4
D= 850
E= 2250

Substituting these values in the above equation we have:

$$10 \times G \times F \times A + 3 \times G = 496.$$

The table given below gives the value of G, F and A, which will satisfy this equation.

A	F	G		
Cost of Pumping per 1,000 Cu. Ft.	Cu. Ft. Gas Used per Consumer per Year	Consumers per Mile of Main	Sales per Mile	Number of Feet of Main per Consumer
2 c.	15 M	83	1245 M.	64.0
2 c.	20 M	71	1420 M.	74.0
2 c.	25 M	62	1550 M.	85.0
2 c.	30 M	55	1650 M.	96.0
2 c.	35 M	50	1750 M.	106.0
2 c.	40 M	45	1800 M.	117.0
2½ c.	15 M	73	1095 M.	72.0
2½ c.	20 M	62	1240 M.	85.0
2½ c.	25 M	54	1350 M.	98.0
2½ c.	30 M	47	1410 M.	112.0
2½ c.	35 M	42	1470 M.	126.0
2½ c.	40 M	38	1520 M.	139.0
3 c.	15 M	66	990 M.	80.0
3 c.	20 M	55	1100 M.	96.0
3 c.	25 M	47	1175 M.	112.0
3 c.	30 M	41	1230 M.	129.0
3 c.	35 M	37	1295 M.	143.0
3 c.	40 M	33	1320 M.	160.0
4 c.	15 M	55	825 M.	96.0
4 c.	20 M	45	900 M.	117.0
4 c.	25 M	38	950 M.	139.0
4 c.	30 M	33	990 M.	160.0
4 c.	35 M	29	1015 M.	182.0
4 c.	40 M	26	1040 M.	203.0
5 c.	15 M	47	705 M.	112.0
5 c.	20 M	38	760 M.	139.0
5 c.	25 M	32	800 M.	165.0
5 c.	30 M	28	840 M.	189.0
5 c.	35 M	24	840 M.	220.0
5 c.	40 M	22	880 M.	240.0

A	F	G		
Cost of Pumping per 1,000 Cu. Ft.	Cu. Ft. Gas Used per Consumer per Year	Consumers per Mile of Main	Sales per Mile	Number of Feet of Main per Consumer
6 c.	15 M	41	615 M.	129.0
6 c.	20 M	33	660 M.	160.0
6 c.	25 M	28	700 M.	189.0
6 c.	30 M	24	720 M.	220.0
6 c.	35 M	21	735 M.	251.0
6 c.	40 M	18	720 M.	299.0
7 c.	15 M	37	555 M.	143.0
7 c.	20 M	29	580 M.	182.0
7 c.	25 M	24	600 M.	220.0
7 c.	30 M	21	630 M.	251.0
7 c.	35 M	18	630 M.	299.0
7 c.	40 M	16	640 M.	330.0
8 c.	15 M	33	495 M.	160.0
8 c.	20 M	26	520 M.	203.0
8 c.	25 M	22	550 M.	240.0
8 c.	30 M	18	540 M.	299.0
8 c.	35 M	16	560 M.	330.0
8 c.	40 M	14	560 M.	377.0
9 c.	15 M	30	450 M.	176.0
9 c.	20 M	24	480 M.	220.0
9 c.	25 M	19	475 M.	278.0
9 c.	30 M	17	510 M.	310.0
9 c.	35 M	14	490 M.	377.0
9 c.	40 M	13	520 M.	406.0
10 c.	15 M	28	420 M.	189.0
10 c.	20 M	22	440 M.	240.0
10 c.	25 M	18	450 M.	299.0
10 c.	30 M	15	450 M.	352.0
10 c.	35 M	13	455 M.	406.0
10 c.	40 M	12	480 M.	440.0

Note—Loss of candle power not considered in above table.

What might be termed a disadvantage of the high-pressure distribution is the fact, especially in towns which are growing rapidly, that every additional consumer and every increased consumption per year per consumer lessens its advantage over low-pressure distribution.

The number of consumers and consumption per mile might be such that high-pressure distribution would prove the most economical, and yet in three years the number of consumers per mile might increase to the point where low-pressure would be desirable, and every additional consumer would make it more so. All the various kinds of distribution systems have their values, but the important thing to decide is the proper selection of the distribution system especially fitted for the particular case in hand.

The financial situation, the cost of material and labor at the time the bulk of the work is to be done, the character of the soil, the characteristics of the city or town, the future growth of the city or town, the possibility of expensive pavement being placed on the streets in the near future, and numerous other details must be carefully considered in addition to the factors mentioned before and used in the above table. In adopting unit costs as found from other installations, care must be taken to make sure that the conditions are comparable. For instance, there are many records of wrought iron mains having been laid at exceptionally small figures. This may largely be due to the fact that long stretches of these mains were laid at one time, and under favorable conditions. After the bulk of these mains have been laid the chances are that the unit cost of laying small stretches of mains under less favorable conditions will be considerably greater than the average results heretofore obtained. Also with respect to the published unit costs of pumping gas. It must be remembered that some of the results published were obtained under exceptionally favorable conditions. The best results will be obtained where the pumping plant is placed at the existing Works, with very small additional investment for boilers, ground space, etc., and where the compressors or blowers are attended to with practically no additional force of labor.

In St. Louis County it was necessary to purchase separate real estate, and to erect special buildings for the pumping plant. The machinery consists of the following:

Two 15-H. P. Nash Gas Engines, operating two Smith-Vaile straight line compressors, and one 80-H. P., 2-cylinder,

double acting Snow Gas Engine, direct connected to a 14 in. x 15 in. double acting, Laidlaw-Dunn-Gordon Compressor, having a capacity of 22,500 cubic feet per hour. A vibration holder, station meters, oil filters, cooling towers, etc., are also provided.

Most of the pumping is done by the Snow Engine, which is a very economical piece of apparatus, yet for every 1,000 cubic feet of gas pumped the engine uses 45 cubic feet, which at 60c per M. amounts to 2.7c per M. for gas alone. To this must be added the services of one day engineer, and one night engineer, also the interest and depreciation, and general repairs and expense on the whole plant.

Under such conditions as these the unit cost of pumping gas is not at all comparable with such results as are obtained by Mr. Shattuck at the Plants of the Suburban Gas Company.

As stated in the beginning of this paper, all the various kinds of distribution systems have their value, but the important thing to decide in the future will be the proper selection of a distribution system especially fitted for the particular case in hand. A careful study must be made, and this can best be done by the experienced gas engineer, and the answers given to the list of questions shown in the appendix will be of great value to anyone contemplating the installation of a high-pressure system.

Appendix.

The following list of questions was sent out to a number of prominent Engineers throughout the country, and the answers to same are given below:

References to papers on "High Pressure Distribution" will be found on Page 344 of the "Progressive Age," July 1, 1907, in a paper read by Mr. R. M. Searle.

(1) What style of pumping or compressing machinery are you using?

(2) Were you to rebuild your Plant, what changes would you make in its installation?

(3) What is the actual average cost of pumping gas with your present installation?

(4) What is the loss in actual candle power due to compression?

(5) What type of district governor are you using, and is this governor perfectly satisfactory?

(6) What individual consumer's governor are you using, and is this governor perfectly satisfactory?

(7) What is the average cost of maintenance per year over and above the cost had low-pressure distribution been used instead of high-pressure distribution?

(8) What do you consider the average life of wrought iron mains?

(a) In the suburban territories?

(b) In the average size cities of your district?

(9) Have any serious accidents taken place in your district, owing to high-pressure distribution, within the past eight years?

(10) Do you consider that there is any greater danger in distributing gas with high-pressure than with low-pressure, where the population is not dense?

(10a) Do you consider that there is any greater danger in distributing gas with high-pressure than with low-pressure in large cities where the population is dense?

(11) Will you kindly have ten 24-hour charts taken in the high-pressure lines, on the consumer's side of the meter, locations to be taken at random?

(12) Have you had trouble with drips. What was the nature of the trouble?

(13) Are you having trouble with condensation in your high-pressure lines?

(14) Are you having trouble with electrolysis?

(15) Do you use wrought iron or steel pipe for your high-pressure lines?

(16) Do you coat your high-pressure lines with any particular coating, and if so, kindly describe same?

(17) Do you consider the capacities of pipes as obtained directly from Cox's Computer (high-pressure) sufficiently accurate for practical purposes?

(18) What is the average cost of laying 1¼-in., 1½-in., 2, 4 and 6-in. high-pressure pipes?

(19) Do you provide for expansion?

(20) Do you use Dresser insulating joints?

(21) How often do you inspect the service at each individual consumer's residence?

(22) Is there any effect of the high-pressure gas on the diaphragms of your meters?

(23) Have you had many cases of seals blowing?

I.

(1) The Laidlaw-Dunn-Gordon Compressors, single and 2-stage, both steam, gas engine and electrically operated.

(2) The machinery is very satisfactory, and I would not make any changes in the latest installations.

(3) It would be impossible to give an average cost for pumping, as gas engines are used in some of the country towns, steam compressors in others. In some places large quantities of gas are raised to pressures under 20 lbs., while others comparatively smaller quantities are raised to 80 lbs. If it is desired to have an answer to this question, the cost would have to be given in specific cases.

Replying to your letter of June 24th, I am glad to know that the data which I sent to you was satisfactory. In regard to the use of gas for operating gas engines belted to the compressors, I have taken a run of sixteen days operating intermittently and averaging about twenty hours total used per day. One 38 H. P. Gas Engine and one 80 H. P. Gas Engine, the gas registered by meters, these engines working together used approximately 6% of the amount of gas compressed, so that I should say that your results of 4% are extremely good.

(4) No loss in candle power is experienced, as gas is so treated that its terminal candle power is the same as the initial candle power. For method employed, see Paper by E. C.

Jones on "Compression of Illuminating Gas" in Volume 1, American Gas Institute.

(5) Chaplin-Fulton Governors, which have proven very satisfactory.

(6) The Equitable Governor exclusively. No. 1 is the smallest size used.

(7) There is no appreciable difference in cost of maintenance over low-pressure distribution excepting the care of moving machinery and the inspection of governors.

(8) The average life of wrought iron mains depends on the structure of the iron (steel having a shorter life), the amount of protection by a well proven neutral coating, the character of the soil in which it is laid and freedom from electrolytic action. Wrought iron pipe should average twenty years, although there are service pipes in use in all of our towns that I know have been in the ground for over thirty years.

(9) No accidents of any kind have happened with our high-pressure distribution system.

(10) Not with proper handling by trained men.

(10 a) I do not consider that there is any greater danger of distributing gas with high-pressure if proper precautions are taken.

(11) ————————.

(12) We have had no trouble with drips. A special high-pressure drip was used, as shown in an illustration accompanying a paper read by Mr. E. C. Jones before the Pacific Coast Gas Association, September, 1907, entitled "A recent High-Pressure Installation."

(13) We have had no trouble with condensation on high-pressure lines, but there has been some condensation in lines carrying less than 20 lbs. pressure, but this condensation has been taken care of by blowing the drips.

(14) There has been no trouble from electrolysis.

(15) Steel plain end tubing, using Dresser Couplings, and in some cases line pipe with pipe line sockets for medium pressure.

(16) The pipe is first thoroughly cleaned in a special machine using sand to remove the rust. It is then coated with a mixture of best red lead and oil, and after it is thoroughly dried, it is then given a coat of No. 31 Gas Holder Paint. The theory is that the red lead protects the iron, and the gas holder paint protects the red lead.

(17) I have found Cox's Computers safe and conservative, but practical results always exceed the results as obtained by the computer.

In all of our high-pressure calculations we use the formula evolved by Mr. Edward A. Rix, a description in his two Papers on the "Compression and Transmission of Illuminating Gas."

II.

(1) We use positive pressure blowers, manufactured by the P. H. & F. M. Roots Co. and the Connersville Blower Co., both of Connersville, Indiana. Roots' blowers are No. 11 special high-pressure, direct connected with a rope coupling to 20 x 24 horizontal engines. The safe maximum speed is about 150 R. P. M. Also, we have two blowers of the Connersville type, No. 9 special high-pressure, 22½ c. f. per revolution, direct connected to high-pressure Erie engines. These blowers are built to run at 300 R. P. M.

(2) We would install practically the same outfit, however, we would replace the larger size slow speed with the smaller unit, high speed type, the slippage being considerably less with greater economy.

(3) In the past few months we have found the average cost of pumping gas to be about $600 per month. This includes repairs to buildings and steam line, supervision, salaries to pressure men, and cost of steam. This figures about ¾c per 1,000 c. f. of gas sent out over the high-pressure lines.

(4) We have found no loss due to compression; but some experiments have shown that the candle power at the outlet was slightly higher than that at the inlet. The only reason that I can give is that the water vapor must be thrown out during the compression.

(5) We use the Chaplin-Fulton, double-diaphragm, sensitive governor for all sizes above 6 in. Six inches and less, we use the Crawford.

(6) We are using the Reynolds house governor which we have found to be entirely satisfactory.

(7) None.

(8 a & b) We have no data on the life of wrought iron mains. We are taking up and using over, wrought iron mains that were used for natural gas some 15 years ago. They have now been in use for the past eight years and seem to be in good condition. Last year we removed some services which had been in use for the past 50 years and were in good condition. They were taken out on account of being too small.

(9) No.

(10 & 10a) These two questions need a qualifying answer. We do not distribute gas at a pressure above 5 lbs., and even at that, the territory over which this pressure extends is very limited. We have, however, a high-pressure Pintsch line running through the heart of the city, and carrying, as you know, about 250 lbs. pressure. We have never had any trouble with this line.

(11) But few of our consumers are fed direct from the high-pressure lines.

(12) None.

(13) None.

(14) We are having some slight trouble with electrolysis on our low-pressure system. We have found that where cast iron pipes with cement joints are properly laid, there is no trouble. In the negative areas of the city, we have bonded to the negative bus-bar at the Street Railway Power House.

(15) We, of course, use wrought iron pipes of extra heavy weight in the Pintsch system. In other systems we used nothing but cast iron pipes with cement joints.

(16) In laying the Pintsch lines, we enclosed them in boxes filled with pitch.

(17) With large sizes of pipe, yes.

(18) ————————.

(19) We do not provide for expansion in the laying of any of our pipes, except the Pintsch lines running over bridges. In these cases we use long return bends.

(20) No.

(21) Only on complaints.

(22) We do not have any.

(23) We do not have any.

III.

(1) Duplex steam driven compressors, mechanically operated, inlet valve and poppet discharge. Machines are of long stroke and operated slowly. All machinery in duplicate.

(2) Would have part of machinery gas engine driven.

(3) The cost items of compressing gas are: the cost of the steam required, plus a proportion of the engine room labor, oil, engine room expense and repairs, plus labor to return condensation to the plant, no depreciation. Above items total just under 2c. One man per shift does all firing and runs all machinery in engine room on account of favorable location.

(4) 12 c. p. water gas enriched to 20 c. p. with benzol 1½ candles the maximum with average air temperatures about 50°. Twenty-two c. p. water gas 4½ candles maximum loss air about 65°. Severe cold spells loss 7 candles. Illuminants again easily absorbed at point of expansion if reintroduced.

(5) Using both Johnson-Reynolds and Equitable governors, duplicate settings of intermediate regulators and low-pressure governors.

(6) Johnson-Reynolds and also E. Young's combination governor and meter connection.

(7) Practically no difference directly traceable to high-pressure. The high-pressure district more scattered.

(8) (a) 30 years. (b) 20 years.

(9) No.

(10) (a) No. (b) Yes.

(11) ————————.

(12) No.

(13) Yes. The removal of condensation is an important unsolved problem. See Question No. 25, Bureau of Information, American Gas Institute. We are also having occasional stoppage of service and curb cocks due to accumulations of "mechanical separated" carbon.

(14) Yes. Overcoming same temporarily at least by connecting with negative bus-bars of trolley company and making the lines continuous circuit.

(15) Guaranteed full weight wrought iron pipe.

(16) Pipe dipped in Williamson's coating and wrapped with paper.

(17) Yes.

(18) 1¼ in.—12c; 1½ in.—15c; 2 in.—20c; 4 in.—45c; 6 in.—80c.

(19) No.

(20) Use Dresser Couplings but bond over them Dayton & Hammon.

(21) Six months to 1 year. Paint service pipe; oil governor diaphragm.

(22) We find it necessary to make our meters into dipping meters as the diaphragms which pass high-pressure gas have a tendency to become bleached.

(23) No. Our average is 9 in 100 per year.

IV.

(1) Roots' High Pressure Rotary Blowers. Directly connected by means of a rope coupling to Atlas High Speed Engine, operating at 250 R. P. M. maximum and fitted with fly wheel governor and diaphragm governor for maintaining constant pressure. Blowers to operate from one-half to six pounds pressure.

(2) We would not, for the same conditions, change the style of this installation.

(3) No data.

(4) No data.

(5) Do not use district governor.

(6) Reynolds Consumers Governors. Work very satisfactorily.

(7) No data. Not in operation long enough.

(8) Average life of wrought iron mains in suburban territories and cities of this size and same soil, about twenty-five years. Uncoated. We have taken up pipe in the ground for 25 years which looked in well preserved condition.

(9) Have had no accidents.

(10) Do not consider there is any greater danger in this style of distribution.

(11) ————.

(12) Have had no trouble with drips.

(13) Have not been operating under real high pressure, so do not know whether we will have condensation. Expect some.

(14) Practically free from electrolytic trouble.

(15) Use wrought iron line pipe, with long taper recess coupling.

(16) Do not use any coating.

(17) ————.

(18) Have only laid 2 in., with 4 ft. 6-in. cover, which including valves and all other appurtenances runs about 35c per foot in this gravel soil, which requires a wide trench at top, to keep from caving.

(19) No special provisions for expansion.

(20) We use Dresser joints.

(21) Have made two systematic inspections of consumers' residences in the last year.

(22) Not noticeable under the pressure we carry.

(23) Practically no cases of seals blowing on account of low pressure.

V.

(1) Two single cylinder belt-driven Clayton compressors with mechanicallly operating inlet valves and poppet discharges.

Cylinders 14 inches in diameter by 8-inch stroke.

These compressors are driven by 15 H. P. three phase electric motors, current for which is supplied by our own hydro-electric plant.

(2) Would make no change under our conditions.

(3) The average energy per thousand cubic feet of gas compressed for a period of a year is 3.3 kilowatt hours.

You can put any value on the kilowatt hours that you choose. In addition to this some allowance should be made for oil, waste, repairs and attendance. As a matter of fact, there practically have been no repairs up to date.

(4) We have no means of measuring the drop in candle power as we have no photometer at the end of the transmission line.

(5) Reynolds' governor No. 01, of the double district governor type. Has been entirely satisfactory except for a few days of extreme cold weather when we had slight trouble with frost. This has since been overcome by putting a small electric heater in the governor pit.

(6) None.

(7) Not distributing under high pressure.

(8) Impossible to answer this question. Depends entirely on soil and electrolytic conditions.

(9) Transmission line is three years old—no accidents to date.

(10) Yes. Do not approve of high-pressure distribution.

(10a) Most decidedly. Have no use for high-pressure distribution or transmission in large cities. By high pressure I mean 30 pounds or up.

(11) Enclosed herewith please find cards for the high and low-pressure sides of the governor for a week. We do not keep twenty-four hour records.

(12) We use bleeders to take care of the condensation, and have had no trouble except to blow them out.

(13) Answered in No. 12.

(14) Pipe has been in the ground only three years, and over a mile and a quarter of it will have to be renewed this year. The Traction Company has agreed to take care of its return current in such a way that we expect this trouble to be practically eliminated from now on.

(15) Steel.

(16) Pipe is thoroughly coated with water gas tar which has been boiled down to make a fairly thick paint. We have been doing this for some years with excellent results.

(17) Have no means of making a comparison.

(18) Have not sufficient accurate data.

(19) Only provision for expansion is where pipe crosses a bridge and is exposed to a range of temperature varying from minus 35 in the winter to 125 degrees when it is exposed to the hot sun in the summer. In this run across the bridge we use a brass expansion joint with stuffing box.

(20) We have two Dresser insulating joints. We would be much better off without them unless we are going to put in enough to materially increase the resistance of the pipe to electric current.

(21) No pressure service in use.

(22) We haven't noticed any bleaching of the diaphrams so far, but anticipate slight trouble from this source.

(23) Have no seals.

VI

(1) Westinghouse.

(2) None for output which we have.

(3) We have no means of knowing.

(4) We have made no tests to determine candle power loss. We should judge, however, that it is not appreciable.

(5) We use no district governors.

(6) We use Johnson-Reynolds governors and they are working in a perfectly satisfactory manner.

(7) The average cost of maintenance per year is no more with high pressure than with low. The cost for caring for complaints showing a less average cost.

(8) We have no means of knowing.

(9) No.

(10) No. (10a) Yes.

(12 & 13) We have but little trouble with our drips. For the first thousand feet after leaving the Works a considerable amount of condensation. This has never caused us any trouble but once, and this was during a long continued period

of extreme cold weather. The trouble experienced at this time was upon a steep hill quite near our Works, the condensation apparently being held in a finely divided state at this point gradually freezing until without warning our supply was cut off. We have since installed a separator of the same type as Cochran's Steam Separator and think we have solved this difficulty.

(14) No.

(15) Wrought iron line pipe.

(16) We coat our high-pressure lines with Hickenlooper formula.

(17) Yes.

(18) In sandy and gravelly soil our prices average as follows:

1¼ in.—16c; 1½ in.—19c; 2 in.—21c; 4 in.—39c.

(19) Expansion joints.

(20) Yes.

(21) Once a year.

(22) We have noticed none.

(23) Not over two or three each year.

VII

(1) Ingersoll-Rand Compressors; Duplex cross compound.

(2) None that I can think of now.

(3) Cannot give exact figures.

(4) Never have assured myself that there was as much as one candle in 24 candle gas.

(5) Equitable Meter Co. double regulator.

(6) None.

(7) Our high-pressure distribution is altogether a re-enforcing system to low-pressure distribution.

(8) Laid bare about 3 to 5 years in this soil; free from electrolysis will vary greatly according to soil.

(9) Yes, one misfortune.

(10) Yes. (10a) Yes.

(12) Yes. Condensation passing over into low-pressure mains and being taken up by gas which caused stoppages in checks of Welsbach burner.

(13) Have had no trouble since installing drips.
(14) Don't know.
(15) Steel.
(16) All new lines are being boxed and concreted.
(17) Don't know.
(18) Actual cost of installing varying size pipe:

1¼-in. extra heavy black pipe boxed and concreted with one of cement and three of sand, per ft. ..... $.2395

1½-in. extra heavy black pipe boxed and concreted with one of cement and three of sand, per ft. ..... .2645

2-in. extra heavy double strength recess coupling taper thread boxed and concreted; pipe capable of standing 250 pounds pressure, per ft. ..... .3954

3-in. line pipe boxed and concreted to carry 40 pounds pressure, per ft. ..... .3924

4-in. line pipe boxed and concreted, per ft. ..... .5296

6-in. line pipe boxed and concreted, per ft. ..... .9733

(19) Yes. Dresser joints occasionally.
(20) Not for insulating.
(21) Have none.
(22) Takes the oil out of the leathers in a few months.
(23) Have none.

VIII

(1) At three of our plants we use the Ingersoll-Rand straight-line compressors 10 x 13—14, but at our largest plant which does most of our pumping, we have an Imperial Type 10 Duplex compressor with a capacity of a million feet per day. This compressor is compound steam and can be used condensing when desired, but we are not as yet using it condensing.

(2) For our new Plant we will probably use this Type 10 compressor unless we should decide to use the cheap electrical power of the Drainage Canal, in which case we would use an electric-driven compressor of equally as good mechanism; and

would use the Type 10 steam-driven compressors in our outlying large holder stations doing much pumping, using the cheaper but less economical straight-line compressors at the points where little pumping is done. It is the old question of "Interest Charge versus Operating Charge." Where there is but little gas to be handled, I take it that only a cheap compressor could possibly be afforded.

(3) We do not know the cost of pumping gas with our Duplex compressor as it has only recently been installed. With the straight-line compressor, the cost is about 4 cents per thousand, which includes Compressor Labor, Compressor Expense and Compressor Maintenance. The actual figure last year per thousand pumped is as follows:

Compressor Labor	.0156
Compressor Expense	.0238
Compressor Maintenance ..	.0024

Compressor Expense, includes steam, oil and waste, etc.

(4) We cannot answer this, but hope to know more about it within a short time. There is some loss.

(5) We are using the Johnson-Reynolds district governor and it gives good satisfaction.

(6) We are using the Johnson-Reynolds combined gov ernor, and seal and find it satisfactory. You may be interested to hear, however, that we had our first trouble the other day, the diaphragm of one of these governors breaking down completely, as a consequence of which the meter in the house was blown up. The householder, who fortunately turned the gas off without delay, denies having tampered with the seal, but we are still investigating and endeavoring to find out why the blow-off pipe did not take care of the escaping gas. Personally, I am inclined to think that the householder found the gas escaping through the blow-off pipe and endeavored to stop it.

(7) It is impossible to answer this question, as our high-pressure distribution is so new compared with the low-pressure and its cost of maintenance is yet very low.

(8) We have iron and steel pipe in our territory which is

good after fifty years of service, and other similar pipe which, even without electrolytic trouble, has not lasted one year. I believe in covering and coating pipe, and that the average length of life will depend upon the care and intelligence with which this is done.

(9) We have had no serious accident.

(10) No.

(10a) I think there is an increased hazard. It would be necessary to inspect the more complicated and exposed house installations very frequently which would reduce the hazard in that respect; but I do not favor high-pressure mains under permanent pavements where there are telephone and other underground conduits which, in case of a leak, greatly multiply its dangers and the difficulty of finding it.

(13-14) We have practically no condensation or drip trouble.

(15) We have some electrolytic trouble, but it is not yet serious with us.

(16) We use steel pipe.

(17) We use Pyro coating. The first and second coat are applied hot on hot pipe, and all pipe is touched up after laying.

(18) The factor used in Cox's Computer is 41.3, which I believe is too low. I think the factor 47.5 is safe and more in harmony with such experiments as have been made.

(19) Our cost of pipe laid last year is as follows:

1	in.	.1134
1½	in.	.1383
2	in.	.1593

We laid no 1¼, 4 or 6-in. high-pressure pipe last year. The cost of laying the 1 in. is high in proportion, but it is mainly used on short runs, and the labor cost runs up because no single short runs can be done as cheaply as long jobs.

(20) We use expansion sleeves on our pipe line every 500 feet, and we use them whenever we use stop cocks in our main system.

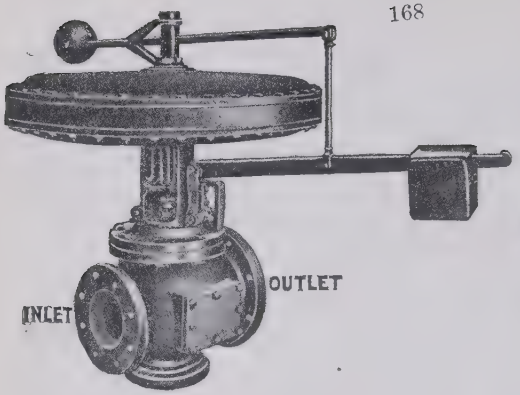

FULTON GAS PRESSURE GOVERNOR WITH AUTOMATIC SAFETY CUT OFF.

CRAWFORD SENSITIVE GAS REGULATOR.

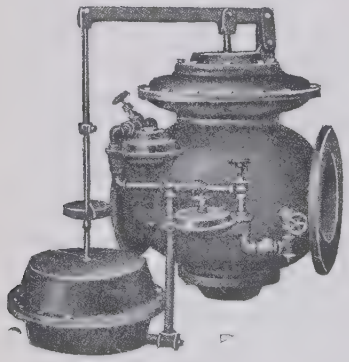

REYNOLDS SINGLE H. P. DISTRICT GOVERNOR.

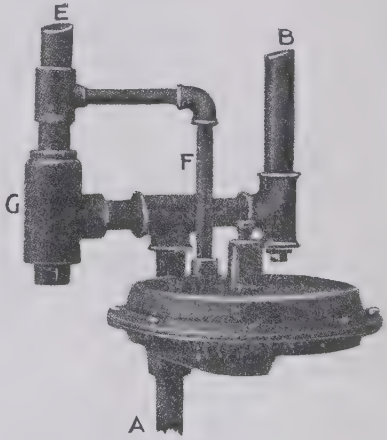

REYNOLDS MERCURY SEAL. (Old Style)

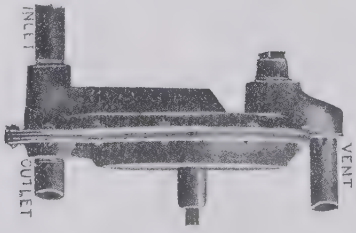

REYNOLDS GOVERNOR AND MERCURY SEAL. (New Style)

EXHIBIT "M"—SOME TYPES OF DISTRICT AND INDIVIDUAL CONSUMERS' GOVERNORS.

(21) We have used a few Dresser insulating joints but have not found them satisfactory under our conditons. Throughout our entire high-pressure sections, where we cross a street railway track infrequently we have enclosed our pipe in a trough of pitch to a distance of ten feet outside of the rails. In this high-pressure district, we have no electrolytic trouble and think favorably of this method.

(22) Once a year.

(23) We have watched for this but have not yet detected it.

(24) We have a good many cases of seals blowing, but practically none except when our pressure has run up to 50 pounds, which it sometimes does for lack of storage room. I do not think there would be much trouble from this cause in a system where pressures on the distribution system could be maintained fairly constant. I favor, if possible, installing at the entrance of every town a governor reducing the pressure to a constant 10 pounds in the distribution system of the town, thus allowing the pressure in the transmission system to be carried at any point desired.

I might add one disadvantage that I intended to put in the paper, that is in the control of the high pressure manhole there is a needle valve, and if the flame flickers around that needle valve it is very likely to make some trouble.

THE PRESIDENT: The paper is open for discussion, Mr. Baehr.

MR. BAEHR: (Reading.) A paper which covers as broad a field as this one by Mr. von Maur, is difficult to discuss in its entirety. It is desirable, however, to enlarge upon a few points therein.

Referring for a moment to exhibit "B," it may be well to emphasize some of the underlying principles which governed the choice of a gas distribution system for St. Louis. The first consideration was to select a system based on the unit principle, the unit of area being such that all low pressure mains would remain moderate in size. The unit finally adopted, viz: the square mile, fills this condition very well, no low pressure main exceeding 12-inch diameter.

The second consideration was the maximum drop at peak load from the point of supply to the point of lowest pressure in the unit of area. This was finally decided upon as one pressure at the points of supply, the maximum variation in inch of water column pressure. Therefore, with constant pressure at the points of supply, the maximum variation in pressure in any point of the unit area is one inch, which was considered to be satisfactory service, and as good as it was commercially desirable and practicable to supply.

The third consideration was the rate of consumption per square mile, in cubic feet, per hour at peak load. The figure adopted, viz: 100,000, is the result of numerous data, and is expected to be ample for many years to come in this city.

The fourth consideration was the choice of cast iron pipe for the booster system, and the selection of 5-lbs. per square inch as the maximum pressure to be carried therein. We did not consider the use of wrought or steel screw pipe as being safe, under the conditions of electrolysis existing in St. Louis, nor as being desirable from a standpoint of life. Having determined upon cast iron pipe, we next selected 5-lbs. per square inch as the maximum desirable pressure, because that is about the limit of efficient operation with gas of a positive rotary blower, and even if we had taken higher pressures, using blower engines, or two or more rotary blowers in series, the question of efficiency of lead or cement joints was considered as a limiting feature. There is no question but that lead or cement joints may be tight under pressures much greater than 5-lbs., but an element of danger creeps in, where a great many miles of booster mains run through city streets already filled with sewers, water and gas pipes, refrigerating lines, and conduits of all kinds, where settlement and breakage can readily occur. Even joints clamped with rubber gaskets may not be absolutely safe under higher pressures, over a term of years.

A manhole with high pressure supply was projected at the corners of each square mile. In Exhibit "B" only the low pressure mains are shown.

Experience with this unit system seems to indicate that it will appear desirable to simplify the low pressure system as much

as possible. That is in place of using 4-inch, 6-inch, 10-inch, and 12-inch pipes, or also 8-inch, as shown in Exhibit "F," it may be advisable to use only 4-inch, 6-inch, and 12-inch, and in some territories where the demand and length of blocks warrant it, only 6-inch and 12-inch.

There is another feature which should be emphasized, and that is the question of capacity of the system. It should be understood that as the present belt line becomes inadequate, outer belt lines can be added as fast as required, and all these so connected to a gas works that the capacity will always be sufficient, and so that the system can be supplied even if one of the main feeders is out of service temporarily.

As to the question of reliability, it may be said that reserve pumping machinery should be installed, and the booster system supplied through more than one feeder, or at more than one point.

It may be well to emphasize the point made concerning variation of pressure on the outlet side of house governors where such are installed. Most people believe this to be absolutely constant, but our experience is to the effect that this variation may be much worse than in an ordinary low pressure system, with this difference, that at peak load, there is usually a very fair supply of gas from the regulators.

A feature of the high pressure systems not usually appreciated fully, is found in connection with the use of Dresser or similar couplings. In the Pintsch system at St. Louis, which consists of approximately 20 miles of screw pipe, carrying 225 to 250-lbs. pressure per square inch, it was found that Dresser couplings failed absolutely. We installed a number of them, but were subsequently obliged to remove every one, inasmuch as the hydrocarbon oil decomposed the rubber in a short time, causing dangerous leaks.

There is one disadvantage of the St. Louis city distribution system, that is the booster system, which has not been mentioned in the paper, and that is that we have always felt it was necessary to have a high class man in charge of the system at night, who was thoroughly conversant with its operation. At the present time the Night Superintendent at

Station " A " gas works, has this responsibility on his shoulders, and the point is well worth noting. There is no question but what more intelligent help is required than with ordinary low pressure distribution.

It may be of interest to add a few figures giving the results of a recent test of one of our gas engine driven gas pumping units.

The unit in question is located at our Station " H," at Broadway and Gasconade streets, and its principal use is to pump gas into the booster system during peak loads. Its operation, therefore, is intermittent.

This unit was installed early in 1904, and consists of a 300 H. P. Westinghouse 2-cylinder, double-acting, horizontal gas engine, direct connected through a stiff coupling to a Connersville positive rotary blower. Dimensions are as follows:

Diameter of piston rod on head end, first cylinder.	2-¾ inch
Diameter of piston rod on balance	6 inch
Diameter of gas engine cylinders	16-½ inch
Stroke	24 inch
Displacement of blower per revolution	51.7 cu. ft.

We made the following tests:

One with the gas engine running free, uncoupled from the blower, to determine the engine friction.

A second test with engine coupled to blower, and with blower running on the 12-inch by-pass, to determine total friction of the unit. Connections to blower are 24-inch.

A third test under average working load conditions to determine operating efficiency.

We made an attempt to run a fourth test under brake load to determine the mechanical efficiency of the engine, but this was unsuccessful owing to the construction of the flywheel being unsuited for the use of a brake.

Conditions of Test.

The gas consisted of a mixed coal and water gas, in roughly the proportions of one-third coal gas, and two-thirds water gas.

The gas used by the gas engine is measured by a 6-foot station meter, with Hinman drum, and there is a steel gas

holder, 10-feet diameter, by 10-feet high, between this station meter and the engine, to absorb the vibration.

The auxiliary units are triplex pumps driven by 5 H. P. Nash gas engines, in duplicate, for pumping circulating water, and the gas used by these was measured by a 10-light dry meter, properly tested.

A water meter, previously calibrated, was inserted in the jacket and piston water line to determine the amount of circulating water used. This water is obtained from the large gas holder tank, and is returned thereto after use.

The calorific value of the gas was determined by means of a Junker's calorimeter.

Gases were analyzed with a Hempel apparatus.

Standard thermometers and gauges were used to determine temperatures and pressures.

All gas used was corrected to 60 degrees F., and 30-inch barometer.

The amount of gas pumped by the blower was determined by accurate measurements of the large gas holder at "H." This is a 4,000,000 cu. ft. holder, and on the day of test cloudy weather prevailed, and the atmospheric temperature was practically uniform during the test.

The test was so arranged that the engine was up to speed, and had been running at least five minutes prior to beginning of test, and run was continued at least five minutes after end of test. In other words test was made under a flying start.

All gas calorific values used were net values, as determined by Junker's calorimeter, and while this may not be the best way of rating gas engines, as is now under discussion in the Gas Power Section of the American Society of Mechanical Engineers, yet we used it.

Data Secured During Tests.

Indicator cards from each cylinder, number of revolutions of engine, gas consumed by auxiliaries, jacket and piston water used, temperature rise of jacket and piston water, analysis and heating value of gas, amount of gas pumped by blower, temperatures and pressures of gas at inlet and outlet of blower.

It should be stated that this engine is equipped with a governor to maintain any desired pressure at the outlet of the blower between 1 and 5-lbs. per square inch, and between 1-2 and full speed operation. This governor was out of order at the time these tests were made, and in consequence the engine was run on the throttle.

In the following, I have given the average results only, inasmuch as the complete log sheets would occupy too much space. One auxiliary was running during each test, driving a circulating water pump.

	First Test Gas engine running free, uncoupled from blower, to determine engine friction.	Second Test Engine coupled to blower, and blower running on by-pass.	Third Test Unit running under average working load.
Duration of test (minutes)	30.	60.	180.
Av. speed (in R. P. M.)	178	180.4	174.
Av. mean efficient pressure in head end cylinder, No. 1	17.4 lb. per sq. in.	23.2 lb. per sq. in.	58.3 lb. per sq. in.
Av. mean efficient pressure in crank end cylinder, No. 1	12.5 " "	16.3 " "	44.4 " "
Av. mean efficient pressure in head end cylinder, No. 2	15.2 " "	17.4 " "	48.9 " "
Av. mean efficient pressure in crank end cylinder, No. 2	13.4 " "	12.0 " "	37.9 " "
Av. indicated H. P. in head end cylinder, No. 1	19.5 " "	26.3 " "	63.8 " "
Av. indicated H. P. in crank end cylinder, No. 1	12.5 " "	16.6 " "	44.3 " "
Av. indicated H. P. in head end cylinder, No. 2	15.2 " "	17.2 " "	47.9 " "
Av. indicated H. P. in crank end cylinder, No. 2	13.4 " "	12.1 " "	37.0 " "
Total jacket and piston water used	508.5 lb.	10213 lb.	30689. lb.
Inlet temperature jacket and piston water	79.0° F.	79.0° F.	79.0° F.
Outlet temperature jacket and piston water	99.0° F.	100.2° F.	112.4° F.
Rise temperature jacket and piston water	20.0° F.	21.2° F.	33.4° F.
Gas used by engine (not included auxiliary) (60° F. and 30 in. Hg.)	815. cu. ft.	2075. cu. ft.	11320. cu. ft.
Av. net B. T. U. in gas	580.	581.7	589.5
B. T. U. absorbed by jacket and piston water	101700.	216516.	1025012.
B. T. U. utilized. Calculated from I. H. P.	77113.	183749.	1473555.
B. T. U. lost in exhaust and otherwise, by diff.	293925.	806763.	4174573.
B. T. U. Total	472700.	1207028.	6673140.
Thermal efficiency in cylinder	16.3 per cent.	15.2 per cent.	22.1 per cent.
Exhaust gas analysis. Av. of 4 determinations per cent. by volume, CO_2			10.7
O			1.1
CO			1.2
N			87.0
Gas pumped by blower			1327515. cu. ft. corr.
Gas pumped by blower per hour			442505. "
Displacement of blower per hour			540006. "
Volumetric slippage of blower			18. per cent.
Av. pressure gas at blower inlet			0.26 lb. per sq. in.
Av. pressure gas at blower outlet			3.80 " "
Av. temperature gas at blower inlet			81.° F.
Av. temperature gas at blower outlet			117.° F.
Av. rise temperature gas at blower			36.° F.
Gas consumed by engine per hour (not included auxiliary)	1630. cu. ft. corr.	2075. cu. ft. corr.	3773. cu. ft. corr.
Gas consumed by engine per M cu. ft. pumped (not included auxil.)			8.54 "

Mr. John D. Shattuck: I think Mr. von Maur has covered the subject of high pressure distribution pretty thoroughly. There are two or three wrinkles which we are using that may be of interest. We have lines running out in a number of different directions. When the terminal points become over-taxed, we put in compressors and gas engines at these points, and store gas during minimum consumption period for the hours of maximum demand, and in that way save the laying of additional lines for a number of years. We found another use, transferring gas at outlying stations from one holder to another by the use of high pressure gas itself through the cylinders of the engine, letting the exhaust into the low pressure mains. We also use high pressure gas for transferring liquids. We have encountered a number of serious objections to high pressure, one of which is the mechanical separation of carbon from the gas. We find that small mains that are over-taxed, become clogged up with very fine particles of carbon. If it is gas that has been transferred a good many miles, it must be simply mechanical separation of carbon. I have some interesting charts showing the storage capacity of high pressure mains. We have one line that is about 14 miles long, and in the first 17,000 feet has a fall of 11 pounds, while in the balance of the 14 miles there is a fall of only 2 pounds, and that is during the maximum hour. We have not been able to thoroughly understand the reason for this, but a number of tests have shown that for the last two or three miles the pressure has stayed practically uniform, even during the maximum hour. We have found that the Dresser joints, or joints similar to these, are not good where they are used as an expansion joint. Just as soon as there is any movement of the pipe through the Dresser joint, the rubber is very soon destroyed, but where the Dresser joints are buried in the ground and there is no movement of the pipe, we have had them in use eight years without any trouble. If a bridge is very long, I would suggest using a loop, similar to that I notice the Pennsylvania Railroad is using over long distances.

Mr. Norris: May I interject a question here? Mr. Shat-

tuck says the Dresser joint is not satisfactory as a bridge expansion joint. I would like to ask whether that applies to the use of a single Dresser joint to take care of the expansion on a bridge, or whether it is true where the Dresser joint is used on each joint?

Mr. Shattuck: Only where there is a movement of the pipe as a true expansion joint. Where there is a joint on every length I do not think there would be practically any movement in the pipe.

The President: Shall we hear from Mr. Rice?

Mr. H. L. Rice: Mr. von Maur has performed a very valuable service in treating high pressure distribution, as a part of all distribution. In the beginning of high pressure work we had high pressure enthusiasts, high pressure engineers, high pressure detractors. The wise distribution engineer is the man who appreciates the uses and also the limitations of high pressure distribution in general distribution work and knows how to apply them. Mr. von Maur has listed the many kinds of distribution that are used to-day, and has given one very interesting application of high pressure, or medium high pressure, distribution in the improvement of pressure conditions in large cities. These charts he has given, are well-nigh ideal, possibly better than can be hoped for under all circumstances and in all localities. It seems to me that the regulation of pressure is one of the most important subjects before us to-day in our various communities. There is a distinction between the pressure that you give a consumer and the regulation of that pressure, and it is a distinction that is not always understood. There is unquestionably a demand on the part of the consumer for an even pressure, and within a reasonable degree the consumer is entitled to it. There might be added one other division to this list which Mr. von Maur gives which I might designate as the "Cincinnati System." Mr. Earnshaw can explain that better than I, but I may say briefly that the distinction between that system and the one in use at St. Louis is that, whereas at St. Louis all the low pressure mains still remain con-

nected to the holders in the city, at Cincinnati all the gas is transmitted through the medium pressure system during the greater part of the day under ordinary holder pressure, but during the peak load under whatever medium high pressure is necessary. Now this scheme has certain advantages. It is of great advantage in any locality where improvement in pressure conditions is sought, and where there are large mains leaving the gas works which can be isolated from the distribution system as a whole, except at critical points. I understand that at St. Louis these mains did not exist, but in many localities they do exist, and can be made to perform a greater duty by pushing the gas through them. It should be borne in mind that Mr. von Maur's calculation as to high pressure distribution *versus* low pressure distribution, applies only where high pressure transmission does not already exist. Where high pressure transmission already exists, as in the case of one town served from another at a distance, then his figures do not apply, and in this connection every engineer who intends to use any form of high or medium pressure distribution, should familiarize himself with the mathematics of the transmission of the gas. I was very much surprised to read, only a few weeks ago, in the *Gas World,* an editorial statement that the high pressure engineers have not yet succeeded in getting away from the fact that the volume of gas transmitted is only as the square root of the pressure. That is a surprising statement to come from such an eminent source. It is true where there is practically no compression, So the mathematics is not fully understood everywhere. To illustrate the point I have just made about calculations where high pressure transmission is already in existence, if you take a mile of 4-inch main, for example, and your initial pressure is 30 pounds, and final pressure 5 pounds, you can deliver approximately 60,800 cubic feet per hour, as against only 64,400 cubic feet per hour, when your final pressure is zero gauge pressure, or you can deliver within 5 per cent. as much gas at 5 pounds as you can at low pressure, zero pressure; and if you raise your initial pressure from 30 to 32 pounds you can deliver just as much gas at 5 pounds as you can deliver at zero, with an initial pressure of 30 pounds. Now we know

the extra cost of adding those 2 pounds is insignificant. I can endorse heartily what Mr. von Maur says about individual regulators needing attention. Our experience has been that these regulators do not remain over any long period at the pressure at which they are originally set, but we do not find that they fail to give a reasonably steady chart. We find, however, that they give in some cases 2 inches, in some cases 4, and we have found them giving as high as 8 inches pressure. This was in a recent inspection, and as soon as I found these were the facts, I looked over the complaints for the last six months to ascertain what pressure complaints had been received, and found that we had not received in six months one single complaint of pressure. This illustrates the fact that it is not so much the pressure at which the consumer gets his gas that he is concerned with, but simply that that pressure remain reasonably constant. Mr. Shattuck has spoken of the dust in his high pressure mains, which he finds to be mainly carbon. We find carbon dust and also iron dust, and it has given us a great deal of concern as to our valves. Much of this carbon comes from lubricating oils, and the engineer operating gas compressors ought to examine very carefully, the amount of oil admitted to the gas cylinders, which can be reduced in some cases, very materially. I appreciate that Mr. von Maur could not write a book on this subject for this meeting, yet I am sorry he has nothing whatever to say about the transmission of gas under high pressure. This is, of course, a part of distribution, and to my mind it is a very important part of the high pressure work, and that the concentrating of small, uneconomical gas producing stations into central works, is a great problem for the future.

Now in this connection it is remarkable to note how little we know about what happens to the gas when we compress and transmit it over long distances, that is, as to heat units and candle power; we know very little about these subjects; we know very little about the proper handling of the compressed gas, especially as to its proper condensation. I am glad to be able to say that the Illinois Association, affiliated with this Institution, is now at work, as a part of its research contribution to the Institute under the affiliation agreement,

on this subject to determine, if possible, both on water gas and coal gas, or to make a start at least in determining—for that association can do but little more—as to what happens, what loss of candle power there is, what loss of heat units there is in the compressing of gas, and what loss there is in transmitting it after compression.

THE PRESIDENT: Thank you, Mr. Rice. Shall we hear from Mr. Cowdery?

MR. COWDERY: Mr. President, I did not undertake to post myself upon this paper sufficiently to discuss it, thinking that there were plenty of the younger element who were working on the subject thoroughly, and able and willing to discuss it in all its details. I suppose—I only came into the room a few minutes ago—I suppose that it has been brought out very clearly that the comparative costs given in this paper were only for the purpose of comparison.

THE PRESIDENT: Yes. That was developed by Mr. von Maur at the opening of his paper, that he simply took the figures of cost, inclusive only of items comparable; it does not include all the essential items of the cost of performing the work prescribed.

MR. A. S. MILLER: It seems to me that there are two or three points which have not been brought out. The first point is the loss due to the rapid depreciation by obsolescence. The paper says that as the business grows, the system becomes obsolete; therefore the cost of the depreciation is very high. In addition to that the physical depreciation of the wrought iron or steel pipe is very high, much higher than cast iron pipe, such as would be used for a low pressure system. All will understand, of course, that I refer to high tension distribution, and not to high tension boosting.

MR. E. H. EARNSHAW: Mr. von Maur has covered a great many different ways in which high pressure distribution comes up, but the ordinary way that causes a manager the greatest problem is when the straight low pressure distribution from his works or outlying holders, if he happens to have any, fail to meet the conditions of growth of the city. This

growth normally takes place on the outskirts of the city, and the increasing use of gas ranges make a demand at noon time, usually heaviest on Sunday, which is extremely difficult to take care of. The problem he has to meet is how to supply gas not near the holders, but at remote points. Usually, in any town where even moderately satisfactory service has been possible with low pressure distribution there are mains of sufficient size which, when isolated from many of their connections to the low pressure mains, are of sufficient size to constitute a belt line system with direct governors; and the pusher system, the boosting system, under those conditions need only be used during very few hours of the twenty-four.

Mr. Rice spoke of that system as in Cincinnati. I happened to meet the problem in Cincinnati four years ago where these conditions existed. There were no outlying holder systems in that town, and the city was supplied from two works, which happened both to be located on the same side of the city and the territory supplied was about 14 miles by 16 miles. This meant that, in order to get even unsatisfactory service with low pressure, very large pumping mains were necessary, and they were ideally placed for an immediate conversion to belt lines. The fact that the introduction of natural gas into the city was imminent, led to the isolation of the holders, and made it desirable to have them depend entirely upon the trunk mains themselves for distributing all the gas, but it was found to be a very satisfactory plan, because during the hours of moderate consumption these mains were amply large to supply all the gas required even to the remote districts; and it is in that feature that the so-called high pressure distribution is likely to be most useful, and to appeal more closely to the average gas superintendent or manager.

There is one other point of detail that our experience has developed. The manholes shown by Mr. von Maur in his sketch, or as used in St. Louis, are somewhat large and rather elaborate, and the valves controlling the governor are placed within the manhole. It has been my subsequent experience, since building this type of manhole in Cincinnati, that a very much smaller manhole is all that is required, and that it is safer, better and cheaper to place the governor valves

outside of the manhole itself. In case of a leaky governor it it rather a serious proposition to close the valve on either side of the governor. There is really nothing gained by having the valves inside of the pit itself, and it is also unnecessary to have the recording gauges placed in the pit, as the same result is obtained by having the recording gauge showing the low pressure placed in the cellar of a house conveniently near the manhole, or if no house is available, it might be, and sometimes is, placed on the hole in a box, where it is easily accessible. This results in a great cheapening of the cost of the manholes and simplifies their operation to some extent.

Another point I might mention is that the tendency in installing a system of this kind is always to use a larger sized governor than is actually necessary. It follows that during the time of maximum consumption the pressure in the feed mains is raised so that the required amount of gas is fed readily through the somewhat smaller sized governor. When the mains are not being carried on a high pressure and the simple holder pressure is on the mains, the less demand still enables a smaller governor to supply all of the gas needed. These are points which help in cheapening the system and make it so much simpler.

THE PRESIDENT: Is Mr. Shelton present. Can we hear from you?

MR. F. H. SHELTON: Mr. President, I have heard Mr. von Maur's paper with natural interest, and the thoughts which come to me in connection with it are rather general and retrospective instead of those of criticism or differing with the writer.

The paper describes a system applying to larger cities. I think we should remember that the great application of high pressure is to practically all conditions in small towns, and those of intermediate sizes as well.

Thinking of the subject at large it seems hard to realize that almost ten years have gone by since high pressure was actually inaugurated in this country on a practical working basis. Having had a great deal to do with it, as you may know, naturally I have been extremely gratified to see how suc-

cessfully some of my thoughts, and the thoughts of others, have been worked out. In Mr. von Maur's paper I find nothing to differ with particularly. The principles are now well established. The use of high pressure work, either for supply, or across country, or for improving uniformity of service, or for economy of operation, in one phase or another, these principles and results can be obtained and have become so much in evidence that I think we can fairly say that high pressure work to-day is now a standard practice in this country, and it has required only eight or ten years to reach that point. Many papers have been written in the last five to eight years on the subject of equipment, paraphernalia, and the operation is pretty well determined; the workings have become almost precise, so much so that the application and the desirability have become almost entirely a matter of dollars and cents. We can pretty well tell what we shall get under given conditions, and we can pretty well figure whether the high pressure method is a cheap, desirable and effective way to meet those conditions or whether it is not. So that there are no especial reasons for me to go into the detail of practice just now, because it is pretty familiar to all of us.

There is only one thought that comes to me in this connection, and that is, that the bugaboo, the fear of distributing gas at considerably increased pressure that was raised originally, by some at any rate, happily seems not to have materialized. There was a fear that if we put gas under pressure through our streets we should expose ourselves to risks and criticisms—to legislation, perhaps. It was felt by some of those doing the initial work that those fears need not be apprehended, because of the equipment that was already available, the appliances that had been in a large measure worked out by the natural gas people, the Pintsch people and other specialists, and we have practically had no unhappy results. It is cause for congratulation that we are now able to operate with greater efficiency and greater economies with these additional means of distributing our gas. As far as I know, or have heard, we have not encountered any setback on the score of additional hazard. The high pressure mains have

carried over their own precaution against leaking by the very necessity of having an unquestionable pipe. The means of attaining that end have been so well carried out, that the high pressure systems, certainly in the higher range of working, can be taken as substantially a solid pipe from one end to the other, with the result, I believe, that we have very much less leakage and less public hazard than we had under the older method of working. In my experience, in the several instances with which I have been connected, we have never yet had a serious accident, and of my own knowledge I know of no harm that has come at any point because of working under a high pressure basis. I should be glad to hear from others as to whether, in their belief or in their experience any actual measure of additional hazard has been encountered because of working at a somewhat higher pressure.

THE PRESIDENT: Mr. A. E. Forstall will read.

WRITTEN COMMENT ON MR. VON MAUR'S PAPER ON "HIGH PRESSURE DISTRIBUTION."

BY WALTON FORSTALL, PHILADELPHIA.

Mr. von Maur's paper is a valuable contribution to the literature of gas distribution. It describes clearly the plan adopted to place the supply of gas in St. Louis upon its present basis, and the comparison between the charts of 1908, and those of 1903, shows how great has been the improvement and the success achieved. The reader is convinced that the system adopted was the best for St. Louis, and generally speaking, I think that the system—viz: one comprising a medium pressure line feeding into the distribution system through street governors, and also supplying any outlying holders—will prove more economical than the straight system of low pressure distribution, in all cities already provided with outlying holders and handicapped by a large mileage of 4-inch and 3-inch mains. I had the pleasure in 1907 of inspecting the distribution systems of Milwaukee and Cincinnati, as well as St. Louis, and in each case conditions essentially similar had been successfully met by the installa-

tion of a medium pressure line. I have never had the opportunity of installing such a line, because conditions in Philadelphia have always favored a continuance of straight low pressure distribution. For five years, however, we have during the winter months, at one or two daily periods of peak load, delivered gas into the distribution mains at three or more points, by means of a connection with the pumping mains, used for filling outlying holders. In this way, an investment of several hundred thousand dollars, otherwise necessary in 1903, was delayed until 1908. At three of the feeding points, 20-inch valves were opened to whatever extent might be necessary to follow a definite schedule of pressure. Generally speaking the pressure in the 20-inch distribution main was raised to 4 inches, and this ensured 2 inches in all mains affected by the feeding points. During the quarter hour of greatest demand, one point has supplied gas at a rate equal to 200,000 cubic feet per hour, and the other two points at about half that rate. Automatic governors were not installed at these points because of the comparatively few hours in the year they were in use, and the knowledge that in a few years they would be rendered unnecessary by proposed main and holder installations. There is also one feeding point in constant operation and controlled by a governor. Here a 6-inch connection from a 20-inch pumping main into a 6-inch and 8-inch distribution main has for six years, at a total expense of less than $200, maintained pressures quite uniformly at 3 inch throughout a region of about half a square mile, and thus rendered unnecessary the laying of about $15,000 worth of 12-inch pipe. The only way in which the existence of the feeding point interferes with the normal use of the pumping main, is that a pressure equal to the lowest pressure thrown by the holder filled by the pumping main, must at all times be on this main, and this requirement is easily met.

I think that the two ideal lay-outs for mains in a square mile of territory, as shown by Mr. von Maur, are very interesting, and will be of value to distribution men in planning extensions and reinforcements.

Mr. von Maur states that Mr. Cowdery estimated on a peak load supply of 100,000 cubic feet per hour. In Phila-

delphia, in the closely built up residence district, about 1,550 feet of main is required to supply 250,000 square feet of territory. Each 100 feet of main has a peak load demand of 55 cubic feet per hour, which is equivalent to 85,000 cubic feet per square mile of territory. This is with gas at $1.00, so I believe Mr. Cowdery's figure of 100,000 is amply justified, if St. Louis is anywhere as closely built as Philadelphia.

I was interested in making a comparison between the St. Louis drip record and the corresponding figures for the distribution mains in Philadelphia in 1907.

Here it is:

	Philadelphia	St. Louis
Gallons per drip	91.4	71.4
Yearly cost per drip	$1.09	$1.17

The equation and table showing the limits of profitable high pressure distribution should be a great help to any man desiring to know what system is the best for his own set of conditions, for by adapting the equation to these conditions, a reliable answer will be obtained. Judging from the questions that in previous years have been asked at gas meetings and in question boxes, there are a number of men who are inclined to regard high pressure distribution as a universal cure-all, which would reduce distribution costs to a minimum. Mr. von Maur shows very clearly how different circumstances require different solutions.

The President: Anything further, gentlemen? If not, we will ask Mr. von Maur to reply, and close the discussion.

Mr. von Maur: Referring first to the remarks of Mr. Earnshaw, relative to the size of manhole, etc., I would say that we have found the manholes as at present constructed for the single-type governor to be very satisfactory in practice. The manhole is large enough for the men to make the necessary repairs inside of same. Light is provided by means of electric lights, which are operated from a switch located, usually, on a telegraph pole near by. The manholes are well ventilated. The gauges, I think, should be located inside of the manholes, as this will insure the Inspector opening the manhole, thus

ventilating it, and actually going inside in order to change the charts and check up all of the gauges at least once a week. Furthermore, the gauges being in the manhole, they are not likely to be tampered with by outside parties. A valve is also placed on the high-pressure side, outside of the manhole and some distance away from it.

The capacity of the governors is figured to take care of the consumption, not only for the present, but for all time to come.

It is a question in my mind whether the velocity of the gas passing the edges of the valves in the governor at a higher rate of speed, might not eventually wear them and make them less reliable.

I might have mentioned one more disadvantage which was not enumerated in the paper, and that is the fact that if naphthalene is made it may form around the needle valve and thus affect the intermediate pressure. This has happened several times in the case of one of our manholes, but has never affected the pressure on the low pressure side of the governor.

Referring to the sketch on page 142, giving a proposed ideal layout for small cities, I might add that had the location of the works been chosen at one end of the city, instead of near the centre, the advantages of the system would have been very much more apparent.

In general, the manhole system will show greatest advantage in proportion to the cost of laying mains. The higher the cost, of course, the greater the saving will be, due to the smaller number of large mains used, and to the longer life of cast iron mains.

We had some trouble from leaks on top of the cement joints on the 24-inch high pressure main. We feel now that we have overcome this by wedging up the spigot end of the pipe so as to make absolutely sure that there is no weight on the cement. The theory is that in the case of small mains the weight of the spigot is taken by the yarn, but in the

case of large mains, such as the 24-inch size which weighs a ton to the length, the weight of the pipe presses down on the lower portion of the cement, making possible small pinhole leaks.

In conclusion, I wish to extend my thanks and appreciation to all of the gentlemen who furnished the data for the Appendix in my paper.

THE PRESIDENT: Before proceeding to the next paper, gentlemen, I will repeat the statement that we are limiting the time to be devoted to each paper, in the hope that towards the end of our sessions, we shall have a certain amount of time left, which will be devoted to re-discussion of such papers as, by request, may be brought again on the floor.

Under the by-law passed yesterday I should have appointed immediately at the opening of this session the Committee on Place of Next Meeting. This I failed to do. I will appoint as that committee: Messrs. James T. Lynn, William A. Baehr, A. S. Miller.

While we are appointing committees I will announce the two general committees to serve for the ensuing year. There are most important matters to receive their attention, and the idea is to keep on the committee certain men who have certain matters in charge and can continue the work to the best advantage.

Public Relations Committee: Mr. A. P. Lathrop, Chairman; Mr. J. L. Richards, Mr. E. G. Cowdery, Mr. W. R. Addicks, Mr. C. H. Dickey, Mr. Walton Clark.

Technical Committee: Mr. R. B. Brown, Chairman; Messrs. A. E. Forstall, A. S. Miller, J. B. Klumpp, J. T. Shattuck and A. G. Glasgow.

MR. H. L. DOHERTY: If the reports of the Board of Directors appear as they should, those committees are to be appointed each year by the incoming President. Unless action was taken while I was out of the room yesterday, it was decided at the meeting in Washington that the incoming President was the one to appoint the committees.

THE PRESIDENT: I will have to differ from Mr. Doherty.

Mr. Walton Clark: Mr. President, I have had a little experience in this matter, because I was the President at the Washington meeting, and I appointed the committees. I certainly did.

The President: Yes, but Mr. Doherty is referring to definite action taken last night at the meeting of the Board.

Mr. Doherty: No, I refer to the action taken at Washington which was that the committees were to be appointed by the incoming President.

The President: The fact is, however, that a by-law was passed last night, as drafted by Mr. Lynn, to make it the other way, but it is hardly worth while discussing it now. The committee is practically appointed by the incoming President. I appoint this committee at his request.

WRINKLE DEPARTMENT.

THE PRESIDENT: We will now have Mr. Bump's report on "Wrinkles."

WRINKLES—1908.

PREPARED FOR THE THIRD ANNUAL MEETING OF THE AMERICAN GAS INSTITUTE. M. R. BUMP, EDITOR.

No. 1. METHOD OF CONSTRUCTING BRICK TANKS OR WELLS.

We have recently constructed a tar well 26 feet diameter and 16 feet deep, the soil being 5 feet of clay and all underneath sand and gravel. We constructed it as follows: First a circular hole was dug 4 feet deep, exactly round, the sides being trimmed smooth and sloping 3 inches in 4 feet. As soon as this was finished it was lined with 9 inches of brickwork, laid in Portland cement, the first two courses being only 4 inches thick. Starting at the bottom of this, we again excavated 4 feet deep, sloping the walls the same way, and of such a size as to bring the brickwork fair with the first piece that was laid. The conical shape of the wall furnished the necessary support to prevent the brickwork from going down when it was undermined. This process was repeated until the well was full depth, and it could have been carried much deeper. The 4-inch bottom course provides a tight joint between the

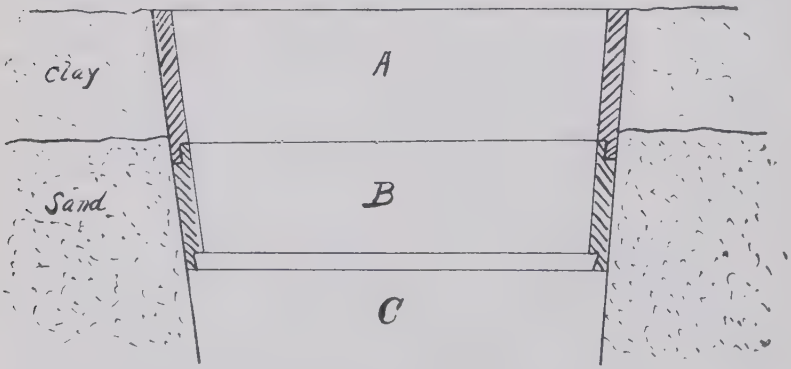

ILLUSTRATION No. 1.
METHOD OF CONSTRUCTING BRICK TANKS OR WELLS.

different layers of brickwork by causing one to lap over the other. The sketch below shows the well as it looked when it was 12 feet deep, the ring A being the first one put in, B the second, and the space C being ready for the third.

In parts of the well we found the sand and gravel very much disposed to run. In such places, instead of excavating 4 feet deep, we went only 2 feet deep, a laborer working immediately ahead of the bricklayer, and keeping the wall trimmed up to shape ready for him. In this way the sand and gravel was not allowed time enough to dry, and gave no trouble by running.

I feel confident that a large gas holder pit can be built in this way, thus getting rid of the trouble and expense of sloping the banks and replacing and ramming the back fill, and at the same time enabling the engineer to place his holder pit within a few feet of the property line on all sides. I believe that at least one-third of the cost of a holder pit could be saved by constructing it in this way; in addition to which, would be the assurance that the earth outside was in immediate contact with the masonry walls.

DONALD MCDONALD,
Louisville, Ky.

(See Ill. No. 1.)

No. 2. AUTOMATIC WATER OVERFLOW FROM WASHBOX.

Most water gas plants are now equipped with tar separators, and it is the custom to pump the separator water over and over again to supply the washbox. A liberal stream of water is pumped to each washbox so that there shall be no doubt about maintaining the seal.

As soon as the run goes on, the flow of gas through the dip pipe of the washbox forces the water away from the dip pipe and raises it around the sides of the washbox. There is much surging of this water and the water line assumes approximately the position shown in the accompanying sketch.

In the usual washbox all that water that has a tendency to rise above the level of the overflow runs out into the separators, thus reducing the quantity of water in the washbox.

It is further reduced by the amount of water picked up by the gas in its passage through, less the tar that is deposited in the washbox by the gas.

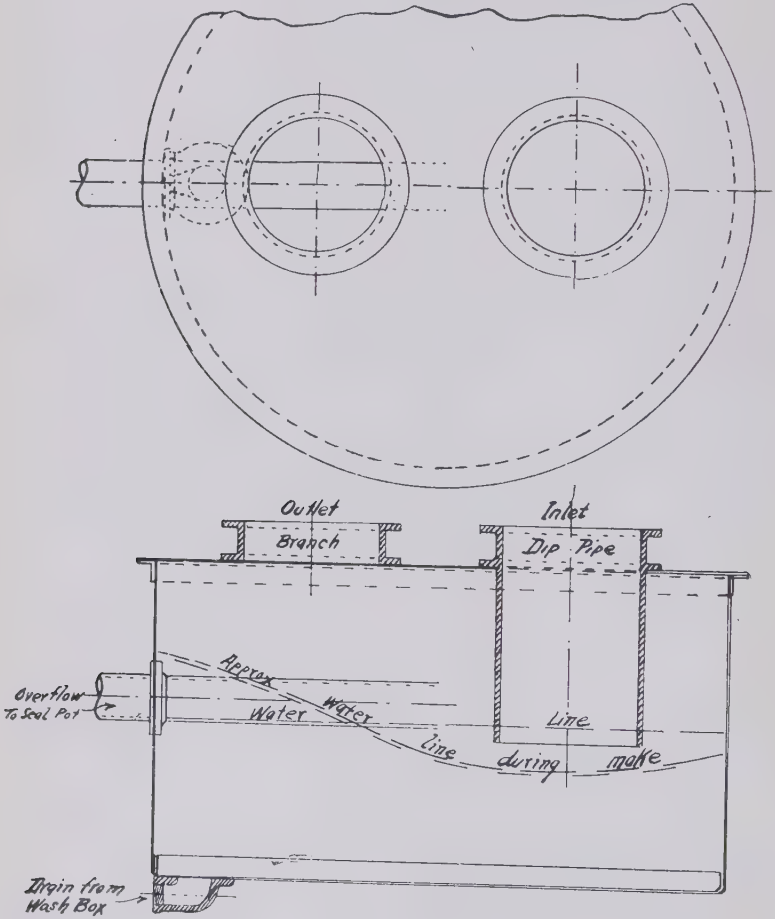

ILLUSTRATION No 2.
AUTOMATIC WATER OVERFLOW FROM WASH BOX ON GENERATOR.
THE UNITED GAS IMPROVEMENT CO., PHILA. WORKS.

The quantity of water that must be admitted to the washbox during the run must be sufficient to restore to the washbox the amount of water which has escaped from it for the reasons given above.

It is customary to set the water valve so that this flow will be continued throughout the blast. The present wrinkle is designed to reduce the quantity of water discharged from the washbox during the run and hence the quantity of water necessary to replenish that lost. This is done by continuing the overflow pipe inside the washbox to a point close to the dip pipe, as shown in the sketch. In this case there is no gushing of water from the overflow during the first period of the make so that the water required to replenish that wasted is only what is necessary to make up for the water taken up by the gas.

From time to time the tar must be drawn off from the bottom drain which, of course, should not be sealed off in the overflow pot.

With this device not more than half the quantity of water will be required, making it possible in new plants to reduce materially the expense of construction and ground area required for the separators since much less water is to be separated from the tar; and in growing plants, a reduction in the pumping capacity, or vice versa, increased manufacturing capacity for the same pumps.

THE UNITED GAS IMPROVEMENT COMPANY,
THE PHILADELPHIA GAS WORKS,
MANUFACTURING DEPARTMENT.

(See Ill. No. 2.)

No. 3. DRIP FOR HIGH PRESSURE MAIN.

No. 1 (Ill. No. 3) shows a piece of ½-inch pipe about 2½ or 3 feet long, turned smooth in a lathe. This pipe is notched at the bottom so that when it rests on the inside of the main, the water can pass up into the tube. At the top there is a ½-inch cock, into which is screwed a ½-inch street ell.

No. 2 shows a saddle tapped ¾ inch. Into this is screwed a ¾-inch corporation cock, and on the upper end of the cock is screwed a ¾-inch by ½-inch reducer. The reducer serves as a stuffing box, having some candle wicking on the inside. After the main has been tapped with a ¾-inch drill, the tube

is placed inside the reducer, which is then tightened up. The corporation cock is then opened and the tube is driven down into the inside of the main and rests on the bottom as shown by sketch No. 3. When the stuffing box is tightened suffi-

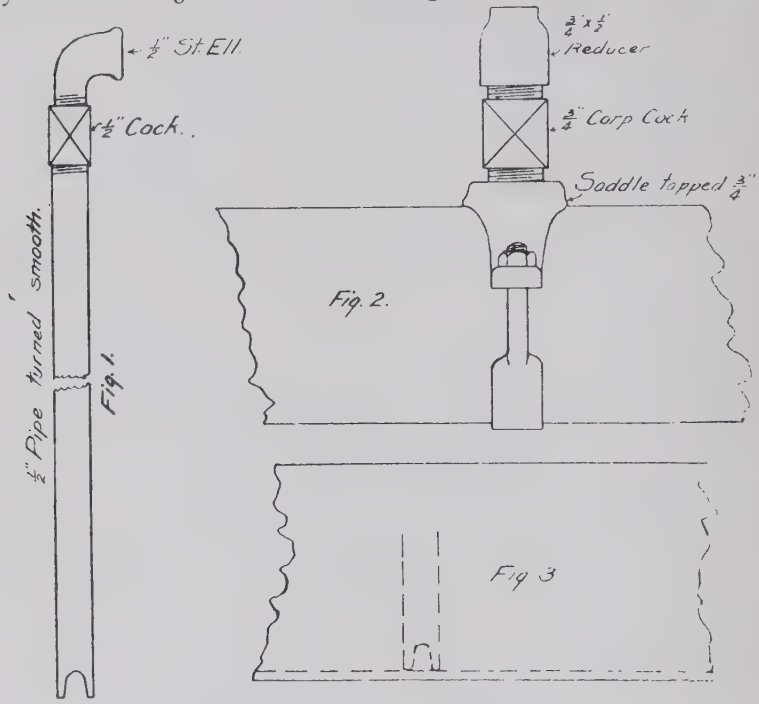

ILLUSTRATION No. 3. HIGH PRESSURE DRIP.

ciently so that no gas is escaping, the ½-inch cock at the end of the tube is opened and the water is forced out by the pressure of the gas.

C. B. STROHN,
Elgin, Ill.

(See Ill. No. 3.)

No. 4. SCRUBBER SPRAYS.

The advocates of "Non-stratification" theories, to the contrary notwithstanding, there is a tendency upon the part of currents of gases to channel and chimney, (A) through opposed currents, (B) through water or water vapor, and

conversely to be channeled through by water or vapor, no matter how diminutive the chimneys or currents.

It is a principle of mass action that the finer the dissemination of two or more elements the more complete and intimate their intermixture, hence with water scrubbing or gas washing, the finer the mist of the water the more complete the saturation or supersaturation of the gas, with consequent precipitation of foreign matter mechanically entrained; the result to be accomplished.

Another physical feature consists in the fact that where water mist is used the union is more thorough and at the same time more gentle, the bubbles and globules of hydro-carbon matter suspended in the gas being slowly and easily dissolved and not burst by the violent action of a relatively large or solid mass of water.

The result being that the tar and lamp black suspended in the shape of very large globules or "fog" are removed with a minimum abduction of the valuable hydro-carbon oils or illuminants.

However correct this rather obstruse "theology" of gas cleaning may be, it is a fact that misting water in scrubbers under practical working conditions effects the maximum of purification and condensation with a minimum of loss in precipitation.

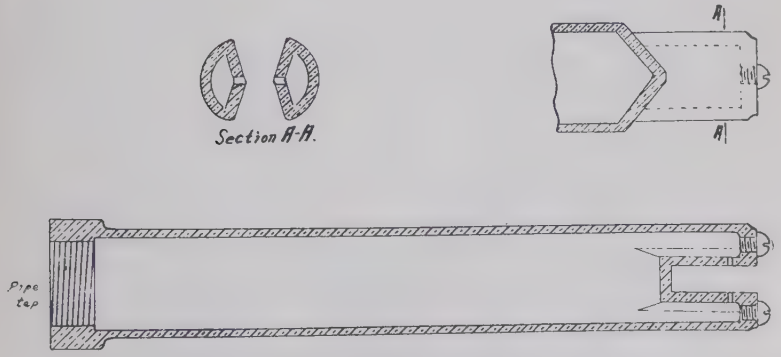

ILLUSTRATION No. 4. BRONZE SPRAY NOZZLE.

To this end is submitted a sketch (Illustration No. 4) of a misting spray, designed to operate at a pressure of from 60 to 125 pounds of water (the higher the better), the spray being also of peculiar value in purification of producer gas and blast furnace gas, where they are sometimes superimposed in the pipe lines as well as in the scrubber tanks.

Another type of a spray (Ills. Nos. 5 and 6), which has been very successful for scrubber work consists merely in one of the small cast iron sprays used for watering lawns in connection with a garden hose, used in this instance in an inverted position.

This tangential cone throws an "umbrella" spray and is exceptionally free from "Fogging" or stoppage.

M. Nisbet Latta,
Olympia, Wash.

(See Ills. Nos. 4, 5 and 6.)

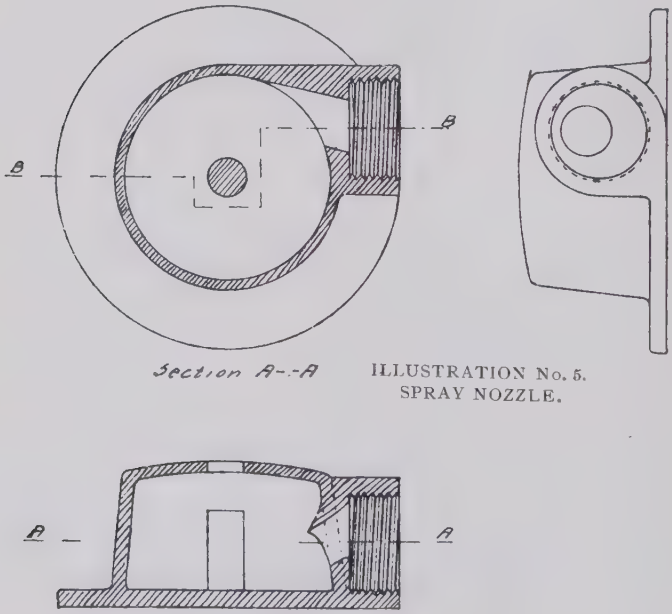

ILLUSTRATION No. 5.
SPRAY NOZZLE.

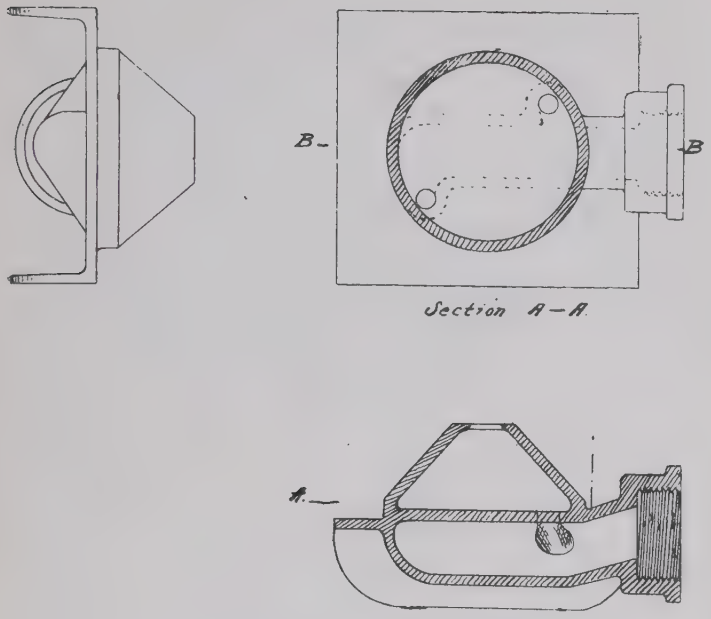

ILLUSTRATION No. 6. SPRAY NOZZLE.

No. 5. Steam Nozzle under Water Gas Generator.

For admission of steam under a water gas generator, the writer has found that some device for diffusing the steam beneath the grate bars tends greatly to prevent its channeling through the fuel bed and the consequent production of CO_2, clinker and "dead spots."

To this end he suggests the use of the steam spray shown in the illustration, one or more of which may be used at the bottom of the generator.

Great care should be taken in boring these sprays that their orifices be absolutely concentric.

The use of these sprays causes the steam to rise in a dense cloud or atmosphere, rather than to impinge in chimneys through the grate bars.

There is also a moisture separating effect due to both the mutual impingment of the opposed steam nozzles, the change in velocity and direction, to the wire drawing and to gravity.

M. Nisbet Latta,
Olympia, Wash.

(See Ill. No. 7.)

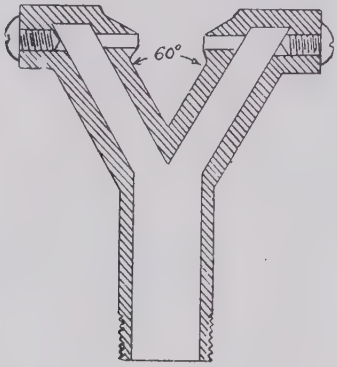

ILLUSTRATION No. 7. MISTING SPRAY.

No. 6. Automatic Alarm on Works Pressure Gauge.

This device is designed to insure against excessive fluctuation in street main pressures during any hours when no attention is being given to the governor.

The maximum and minimum allowable pressures are fixed by the location of contact points of the copper strip A.

The copper strip is insulated from the metal portion of the gauge by the glass front. One wire is fastened to the gauge and the other to the copper strip and whenever circuit is closed the batteries ring an alarm bell located at some convenient point in the works.

L. B. Moorhouse,
San Antonio, Texas.

(See Ill. No. 8.)

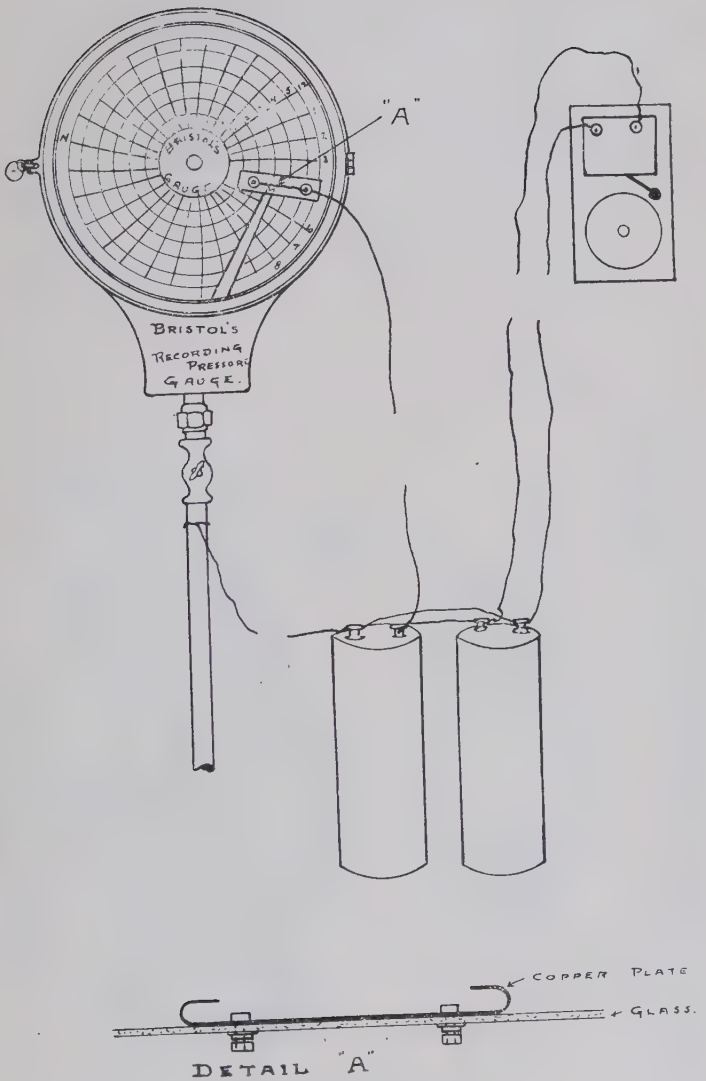

ILLUSTRATION No. 8.
AUTOMATIC ALARM ON WORKS PRESSURE GAUGE.

No. 7. Method of Threading Pipe.

By bolting the two plates to the stocks and removing the handle, and using the Mueller ratchet handle, the pipe can be threaded without digging a large trench to swing the handle usually on the stocks.

The stocks and dies, and the Mueller tapping machine to which the ratchet handle fits, are usually carried in the service cart, so that, with this proposed tool, it is unnecessary to carry any special tools for threading service pipes in trenches.

Geo. Beadenkoff,
Baltimore, Md.

(See Ills. Nos. 9 and 10.)

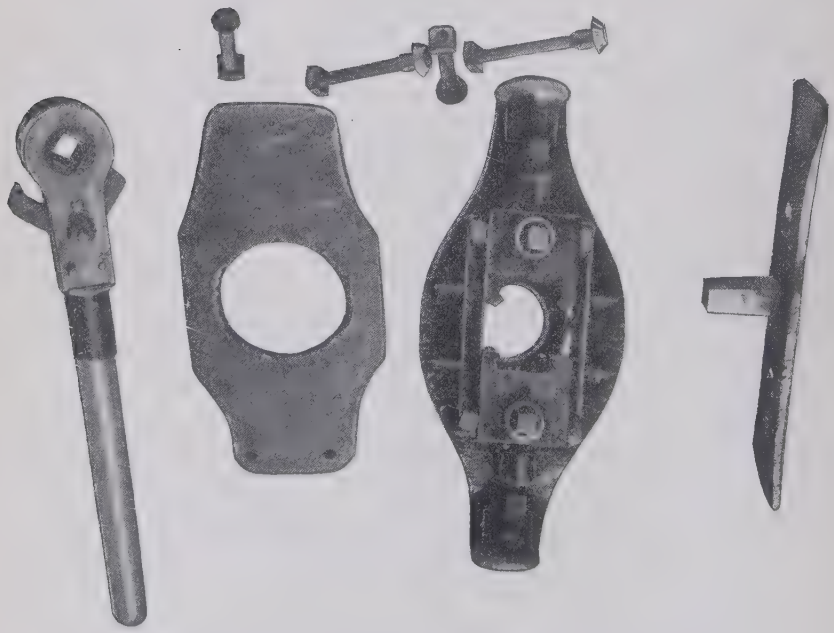

ILLUSTRATION No. 9.
PICTURE SHOWING DETAILS OF DEVICE FOR CUTTING AND THREADING PIPE.

No. 8. Handy Method of Keeping Meter Shop Daily Stock Record.

An ordinary blackboard about four feet long by three feet wide, and ruled as per the attached sketch, is used for this purpose.

The meters, according to sizes, received at and delivered from the Meter Repair Shop are added to or subtracted from, as the case may be, the number on hand at the beginning of each business day, thus showing at a glance what meters are in the Meter Repair Shop for repairs.

A similar count is kept of the meters in the Meter Shop, showing the number of meters of each size which are available for immediate use.

W. J. Dorr,
Los Angeles, Cal.

(See Ill. No. 11.)

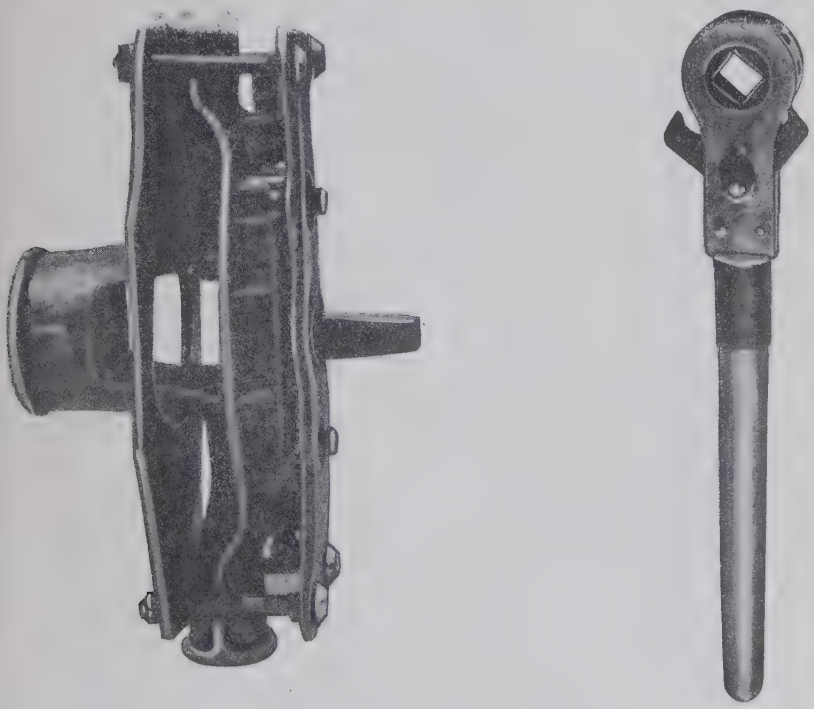

ILLUSTRATION No. 10.
PICTURE SHOWING ASSEMBLED STOCK AND DIES FOR CUTTING AND THREADING PIPE IN TRENCHES.

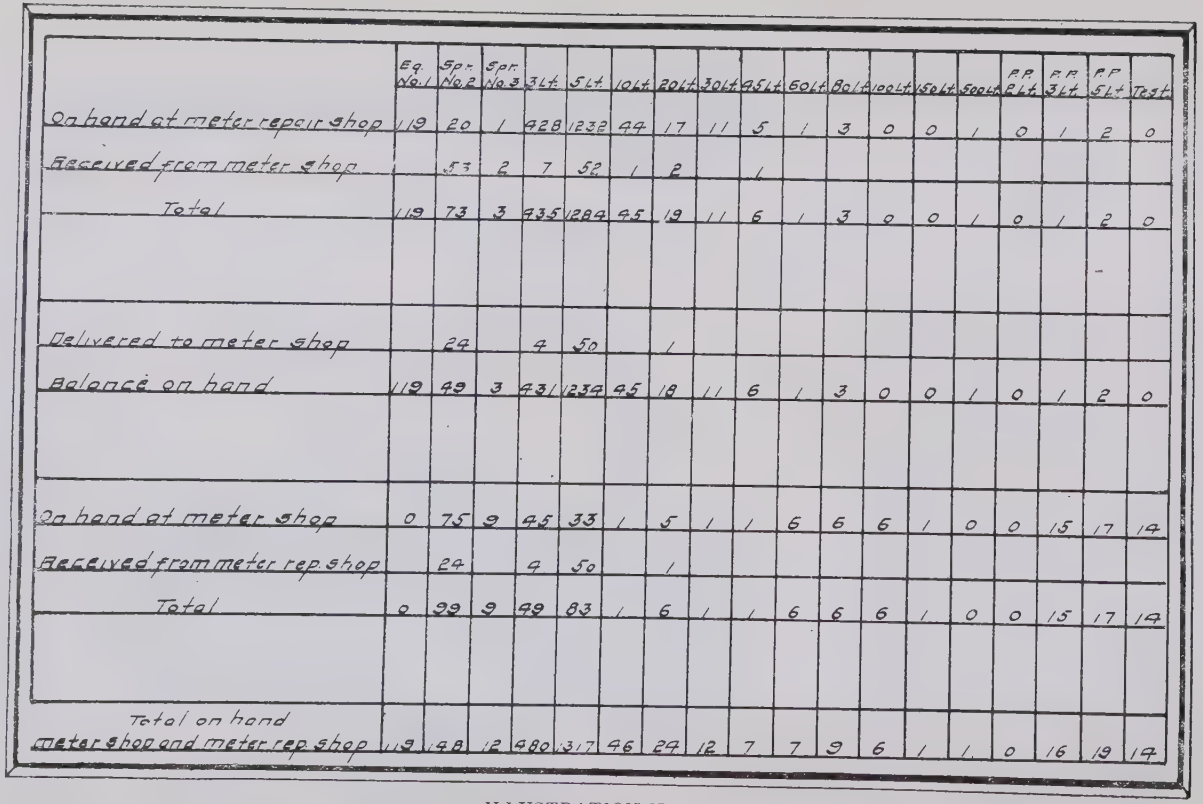

	Eq. No. 1	Spr. No. 2	Spr. No. 3	3 Lt.	5 Lt.	10 Lt.	20 Lt.	30 Lt.	95 Lt.	60 Lt.	Bal.	100 Lt.	150 Lt.	500 Lt.	P.P. 2 Lt.	P.P. 3 Lt.	P.P. 5 Lt.	Test
On hand at meter repair shop	119	20	1	428	1232	49	17	11	5	1	3	0	0	1	0	1	2	0
Received from meter shop		53	2	7	52	1	2		1									
Total	119	73	3	435	1284	45	19	11	6	1	3	0	0	1	0	1	2	0
Delivered to meter shop		24		4	50		1											
Balance on hand	119	49	3	431	1234	45	18	11	6	1	3	0	0	1	0	1	2	0
On hand at meter shop	0	75	9	45	33	1	5	1	1	6	6	6	1	0	0	15	17	14
Received from meter rep shop		24		4	50		1											
Total	0	99	9	49	83	1	6	1	1	6	6	6	1	0	0	15	17	14
Total on hand meter shop and meter rep shop	119	48	12	480	317	46	24	12	7	7	9	6	1	1	0	16	19	14

ILLUSTRATION No. 11.
SKETCH OF BLACKBOARD FOR DAILY METER RECORD.

No. 9. To Prevent Exhauster Blades Sticking.

In oil-gas manufacture the exhauster impellers or blades become sticky, owing to the dryness of oil-gas; in fact, if not watched very carefully they will gum up to such an extent that the machine cannot be operated. We have found a very satisfactory method of preventing this, by injecting at four different points in the exhauster ordinary fuel distillate under pressure. This has a tendency to soften the pitchy material without any detriment to the gas.

The distillate can be applied with economy by means of a small pump belted to the shaft, or coupling link, of the exhauster.

F. C. Millard,
Los Angeles, Cal.

No. 10. A Record Indicator for Purifier Boxes.

A simple little device for keeping tab on the condition of purifier boxes is as follows: A tin disk or dial, say 8 or 10 inches in diameter, is painted with three concentric bands around the outside. On the inner band are painted figures from 1 to 12 inclusive, corresponding to the months of the year, and figures from 1 to 31 inclusive, corresponding to the days of the month, are painted around the middle band. The outside band is painted black and is left blank, and the surface is made so that it may be written upon with crayon. Two hands, similar to the hands of a clock, are attached to the center of the disk by a thumbscrew. The shorter of the two hands points to the numbers on the inner band which indicate months of the year, and the long hand points to the numbers on the middle band which indicate days of the month. When a purifier box is "cut in" service the hands of the dial are placed so as to indicate the date—month and day. The condition of the oxide in the box is determined by a test made by the works chemist, and the percentage of sulphur in the oxide as shown by this test is written with crayon or white chalk on the outer band of the dial.

When a box is "cut out" of service the hands of the dial are changed to indicate that date, and a little tin sign marked "Out" is hung on the thumbscrew.

With an indicator for each purifier box it is a simple matter to keep track of a large number of boxes: the condition of any box is instantly shown by a glance at the dial; the indicators are easily read by the chief purifier man or the foreman; and their use obviates the necessity of consulting a written record in the office in order to ascertain the condition of any box or set of purifiers.

F. C. MILLARD,
Los Angeles, Cal.

(See Ill. No. 12.)

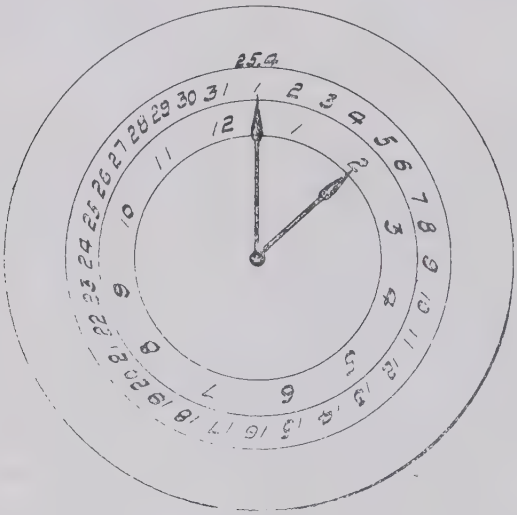

ILLUSTRATION No. 12. RECORD FOR PURIFYING BOXES.

No. 11. METHOD FOR TESTING LIME.

Place one gram of the lime to be tested into an ammonia distillation flask with 3 grams of C. P. NH_4Cl and 300 cc of water. The mixture is then to be boiled for exactly 20 minutes. The NH_3 being absorbed in a normal solution of H_2SO_4, the value of the lime is estimated directly by the weight of the NH_3 distilled. The value of pure CaO is taken at 100 per cent. This gives the alkalinity factor of the lime.

For example, A's lime shows 92.80 per cent. and B's shows 94.50 per cent. Of course, this does not mean 94.50 per cent. CaO as MgO is also present and is of higher alkalinity value per unit weight than the CaO. And as the unburned lime has some value, it would, therefore, be possible to get a lime equivalent to over 100 per cent., if it were low enough in silica and high enough in magnesium.

F. E. Parks,
Detroit, Mich.

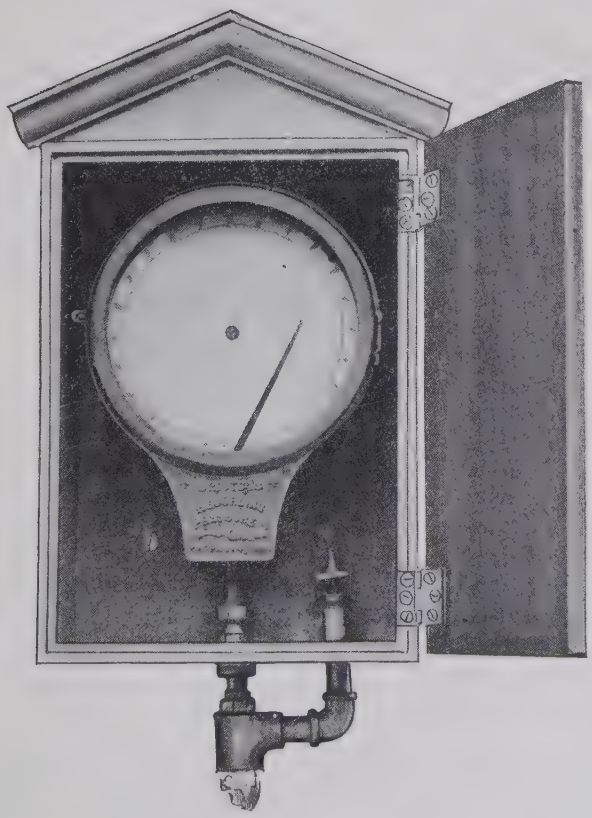

ILLUSTRATION No. 13. GAUGE STATION BOX.

No. 12. Gauge Station Box.

The accompanying photograph shows a tight cast iron box designed to hold a recording pressure gauge and to be fastened to any convenient post or pole. A one-inch service pipe runs from the main to the bottom of the box to supply pressure to the gauge. These gauge stations are located in the outlying and low pressure portions of the city and charts taken from them every day, furnishing data for pressure control.

F. L. Cross,
Detroit, Mich.

(See Ill. No. 13.)

No. 13. Apparatus for Automatic Control of Steam Siphon.

The object of this apparatus is to automatically control the steam valve on a siphon or pump.

(A) is a galvanized iron float which, as the water rises, forces lever E E′ to a horizontal position. When lever E E′ has passed the point of greatest tension of spring (F), the end E flies upward, E′ striking stop B′ on valve rod H, and opens valve D. The siphon than starts to work, float A sinks with water level, and the operation is reversed, valve D closing when stop C′ on float rod forces lever E E′ past the horizontal position.

G. I. Keal,
Detroit, Mich.

(See Ill. No. 14.)

No. 14. Revivification and Handling of Purifying Material.

This sketch shows how the available space for revivifying purifying material has been increased 100 per cent, and at the same time, it presents a scheme by which revivification is rapidly brought about without handling or turning over the material.

The grid construction of the platform, allowing the free passage of the oxygen up through the material, brings about a rapid revivification. The cooling effect of the air on the

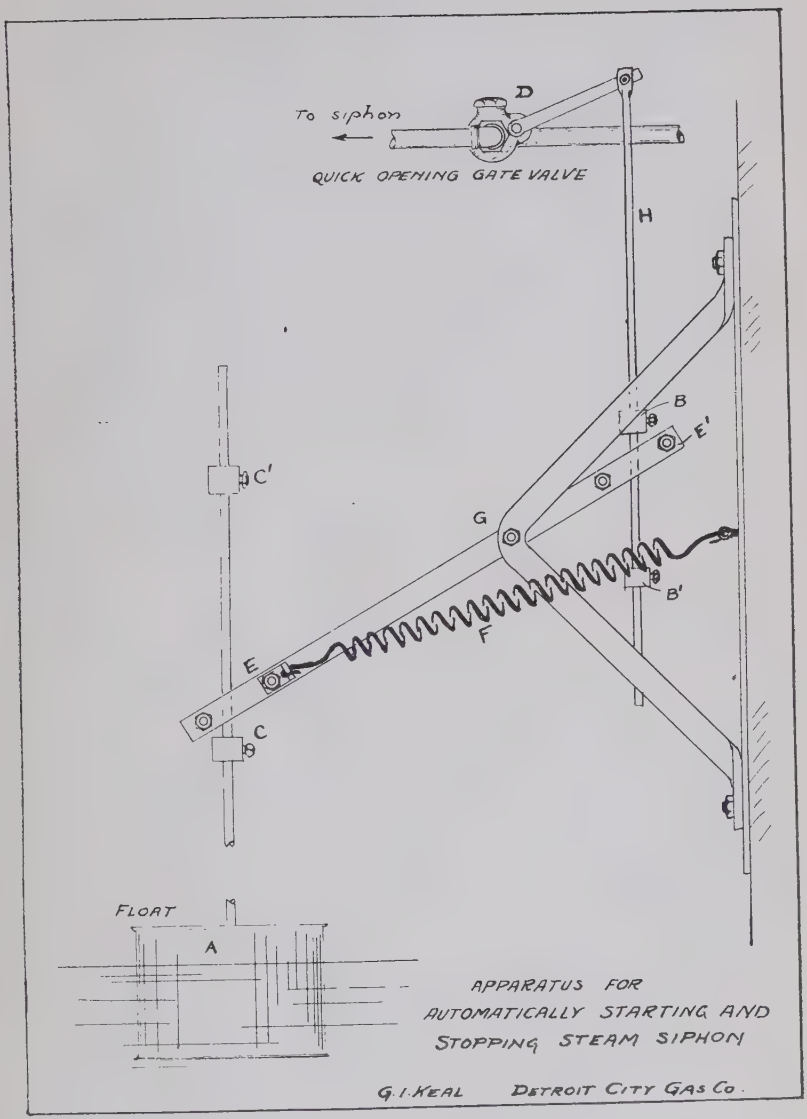

ILLUSTRATION No. 14.

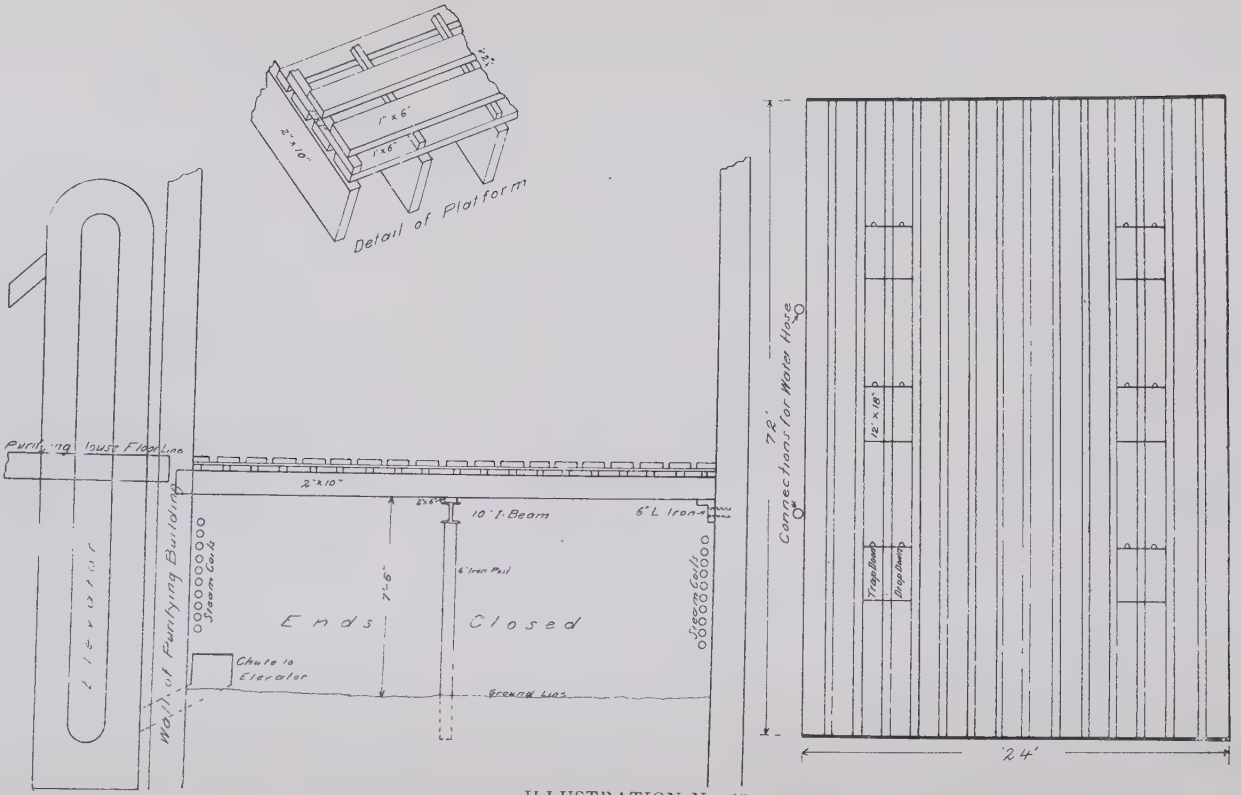

ILLUSTRATION No. 15.

REVIVIFICATION AND HANDLING OF PURIFYING MATERIAL.

material next to the grids keeps the temperature low enough to prevent firing of the wooden construction. The temperature of material is easily regulated by spraying water over surface of material.

After revivification, the trap door in platform, which swings downward, provides an easy way to transfer material to the floor below which is directly accessible to the bucket elevator which is used to fill the boxes in the purifying house adjoining.

During the winter months the ends of this lower compartment are closed up and by a system of steam coils running the length of the room, it is heated by exhaust steam to a temperature comparable to that of the summer months. In this way slow chemical action in material due to the low temperature of the outside temperature is entirely overcome.

V. F. Dewey,
Detroit, Mich.

(See Ill. No. 15.)

No. 15. Recording Pressure Gauge.

The object of this gauge is to obtain a chart showing distinctly the variations of pressure during short periods of time.

It works as follows: The roll of paper (A) is placed with axes in slot (B) and resting upon the driving roller (C). The paper is fed off the top of roll over guide rollers (D) and (E), and under the pen (F), thence under the roll of paper and between driving roller (C) and tension roller (G).

The fresh ink on chart is blotted by blotter roller (H).

G. I. Keal,
Detroit, Mich.

(See Ill. No. 16.)

No. 16. Method of Removing Naphthaline Deposits from Coal Gas System.

Whenever it is necessary, for any reason, to shut down a coal gas plant for several hours, or whenever excessive naphthaline deposits demand particular attention, a very effective and rapid way of cleaning the entire system is to open a large air vent on the foul main, close the inlet valve to the boxes, and open a vent as near this inlet valve as is

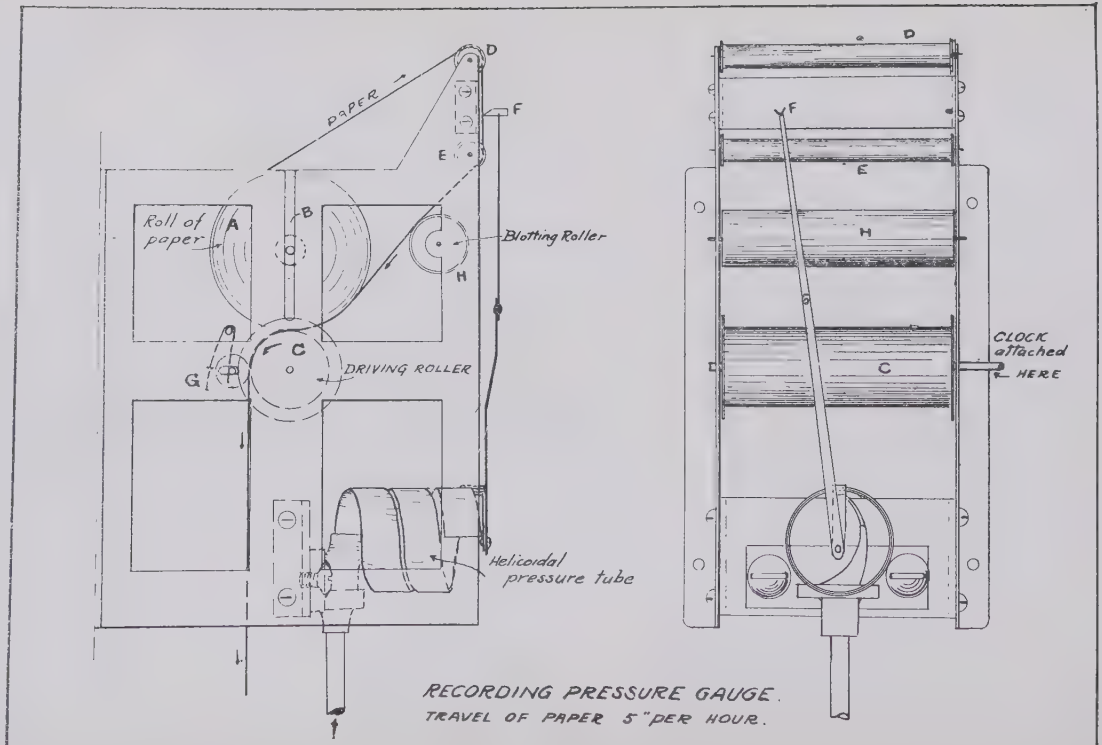

ILLUSTRATION No. 16.

convenient. Run the exhauster to its full capacity which will force large volumes of air through the system. Inject large quantities of steam into the condensers, washers, scrubbers and connections, in conjunction with the circulation of the air. The steam-heated air will rapidly remove the deposits, and in 2 or 3 hours the system will be as clean as when new. All seals must be kept open during the process.

F. L. Cross,
Detroit, Mich.

No. 17. Gauge Apparatus for Testing Drips.

The gauge shown in the attached sketch is fitted up for use in testing drips. In operation the coupling "A" is screwed on to the drip stalk "B." The operator then blows on the rubber tubing "C" with the cock "D" open, until the pressure on the gauge "E" reaches a maximum and then closes cock "D" allowing the pressure to remain on "B" for several minutes. This will show:

First, the depth of water in the drip.

Second, whether the drip stalk is tight or leaking.

A drip tester on a bicycle can test a large number of drips per day determining those that need pumping and reporting for repairs those where the drip stalks are leaking.

F. L. Cross,
Detroit, Mich.

(See Ill. No. 17.)

No. 18. Meter Dial Chamber Test.

The attached sketch shows a method for testing the dial chamber of a meter under any pressure desired. A small hole is made in the top of the meter and the tube "A" is inserted until the rubber washer "B" presses firmly on the meter. Turn pressure on the hose and test with soap suds. The small opening "C" is afterward filled with a drop of solder.

F. L. Cross,
Detroit, Mich.

(See Ill. No. 18.)

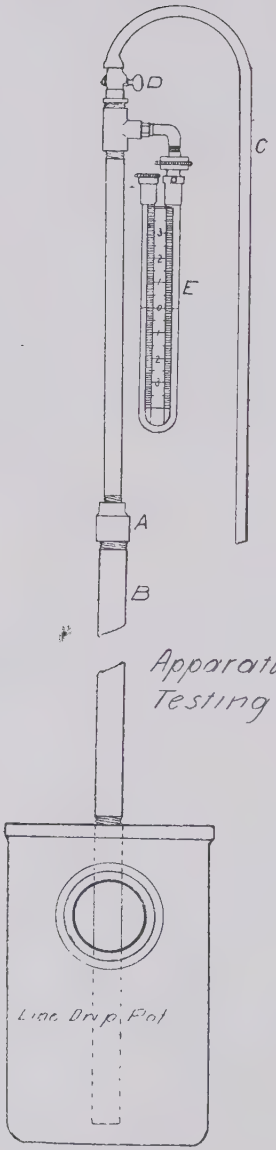

ILLUSTRATION No. 17.

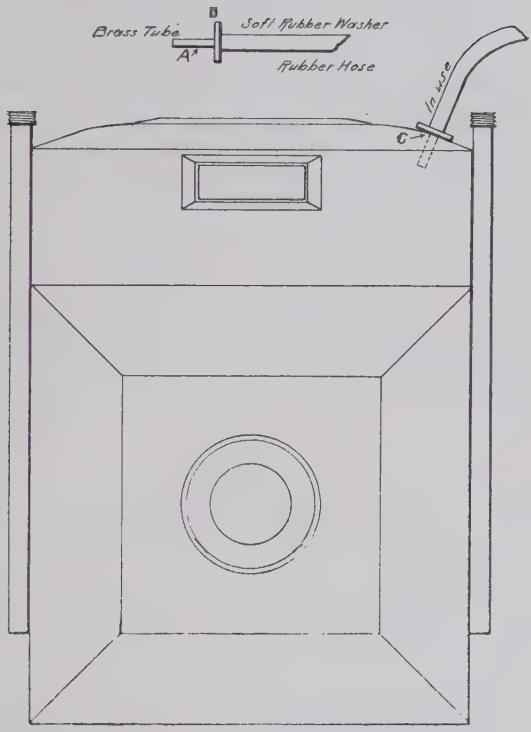

ILLUSTRATION No. 18. METER DIAL CHAMBER TEST.

No. 19. Canvas Meter Sling.

The attached sketch shows a canvas meter sling for use in handling meters between meter shop and consumer. This sling furnished a handle for carrying the meter and protects the front and back, also all corners and edges below the top, from rough handling. The rope re-enforcement at "A" and "B" takes a large amount of wear off the bottom and sides of the cover. The expense of such a sling is not great.

F. L. Cross,
Detroit, Mich.

(See Ill. No. 19.)

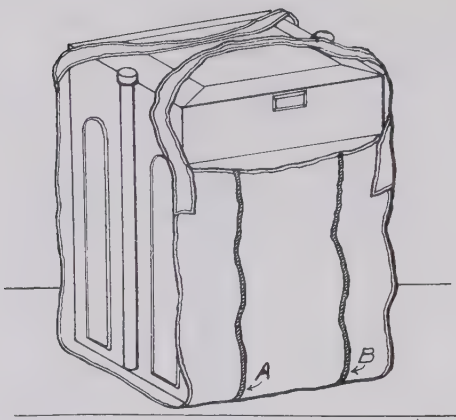

ILLUSTRATION No. 19. CANVAS METER SLING.

No. 20. Dust Proof Gas Light.

The accompanying sketch shows a specially designed 3-burner arc light which gets its supply of oxygen from the outside through a 2-inch pipe leading into the tee-shaped burner case. A special 2-inch flanged casting is soldered to burner case to receive the 2-inch pipe. The ¾-inch gas supply pipe is used as a support for the shade and upper parts of lamp, also providing a means of sliding the shade and frame upward for the purpose of cleaning and maintenance. A spring collar, fitting the pipe, carried by the maintenance man, holds shade and frame up while the arc is being taken care of. The removal cap opposite the air supply permits of easy burner adjustments. The return bend is used to prevent air currents from causing an irregular supply of oxygen to the burner. Bushings in the bend is an easy way of regulating amount of oxygen to conform to the kind and number of burners used. The efficiency of this arc light is pronounced, and the maintenance cost is no more than for the ordinary inside arc. The mantles and inside of globe are always as clean as the outside air supply.

V. F. Dewey.

(See Ill. No. 20.)

Detroit, Mich.

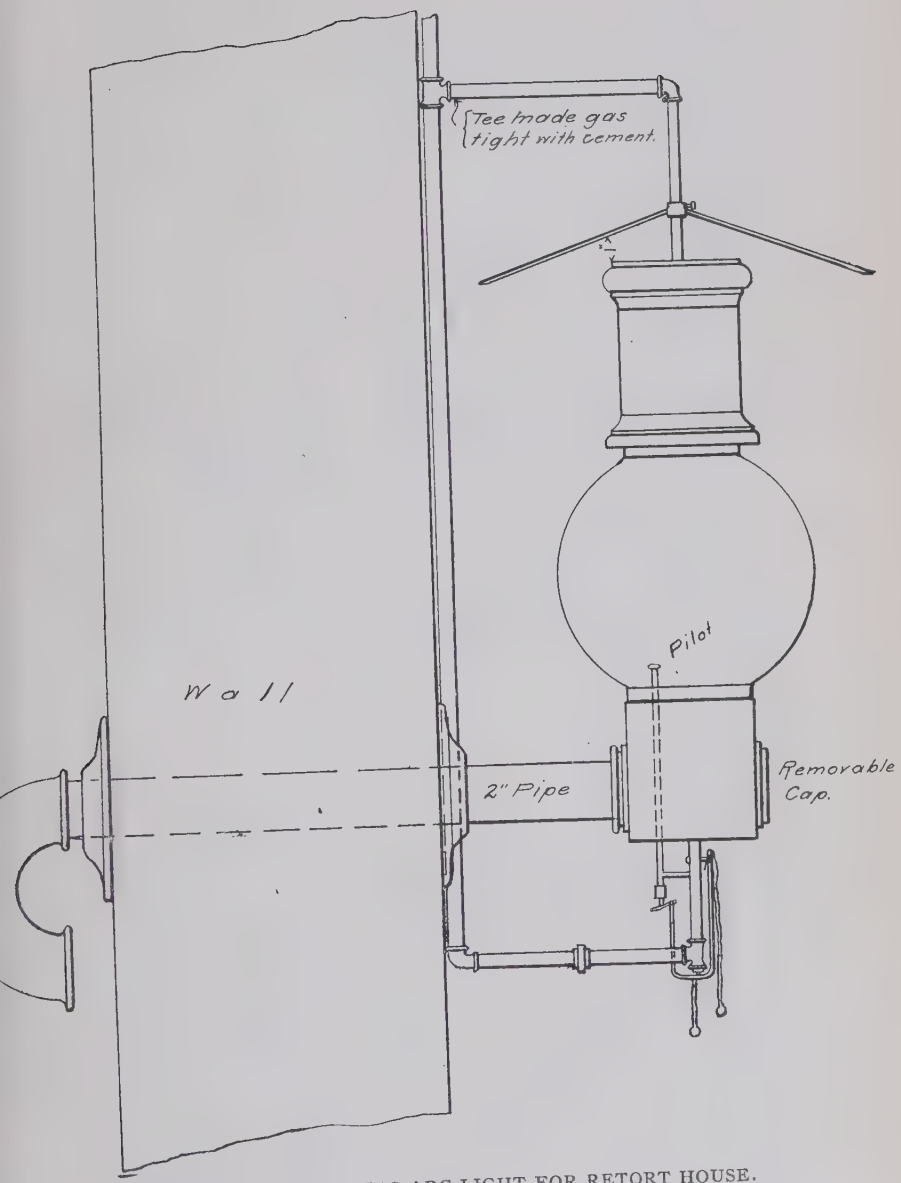

ILLUSTRATION No. 20. GAS ARC LIGHT FOR RETORT HOUSE.

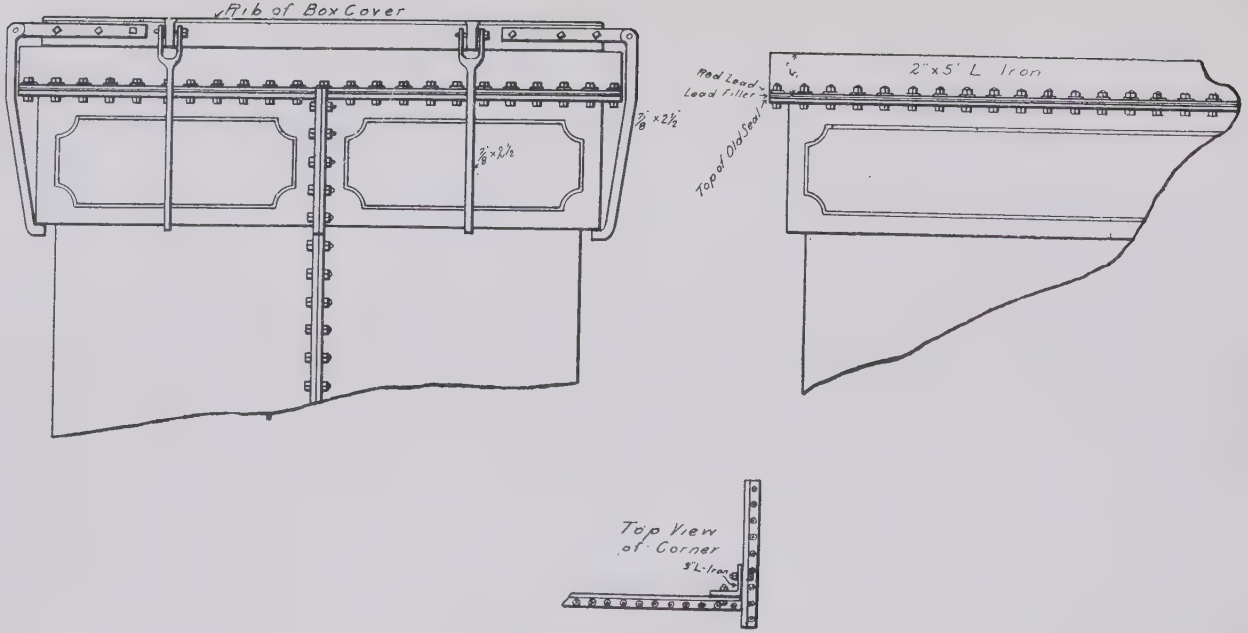

ILLUSTRATION No. 21.
INCREASING WATER LUTE SEALS OF PURIFYING BOXES.

No. 21. Increasing Water Lute Seals of Purifying Boxes.

The accompanying wrinkle shows how the water seal of a set of purifying boxes was materially increased at a small cost. This scheme avoided either a new installation or a continued high purifying expense due to blowing the seals before the boxes showed foul at outlet.

V. F. Dewey,
Detroit, Mich.

(See Ill. No 21.)

No. 22. Emptying Purifying Boxes with Wheelbarrows.

The accompanying sketch shows a wrinkle which can be used to great advantage in a plant where lack of space and location compels the use of wheelbarrows, in emptying a purifying box. The capacity of the box and the rapid filling of the barrows by means of the slide valve in the V-shaped bottom permits a continuous operation which will reduce the labor expense over the old way 15 to 20 per cent.

Where the water lute castings are strong enough, it is not necessary to put supports under the box, as the lugs should support it.

O. A. Sinsel,
Detroit, Mich.

(See Ill. No. 22.)

No. 23. Manifold for Rigid Meter Connections.

The sketches attached show a method of using rigid meter connections on manifolds. The meters are set at an agle of 45 degrees to the wall. The rigid meter connections are connected to Y's on the inlet header by means of male both ends brass cocks. The house-piping runs down on the wall and connects into the outlet of each meter. The number of fittings in this construction is a minimum and all parts are interchangeable. The finished manifold is symmetrical in appearance and is very rigid.

F. L. Cross,
Detroit, Mich.

(See Ills. Nos. 23 and 24.)

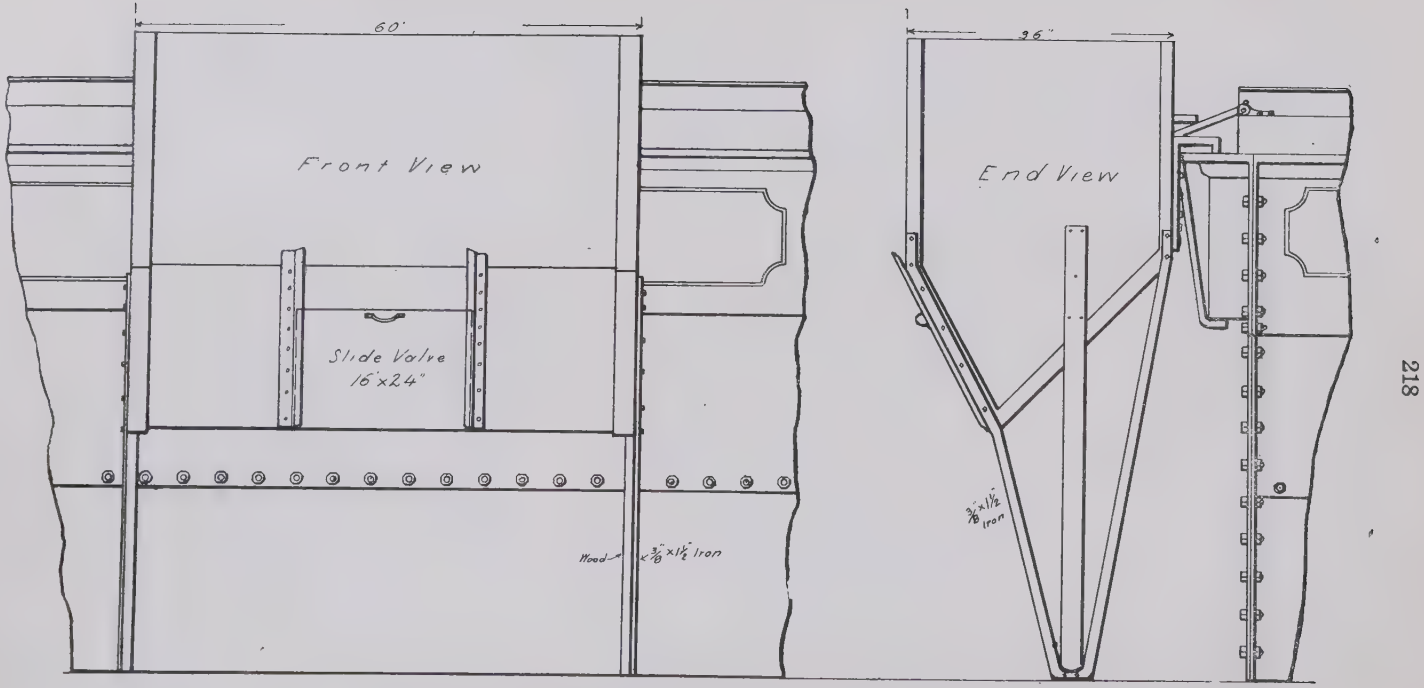

ILLUSTRATION No. 22.
EMPTYING PURIFYING BOXES WITH WHEELBARROWS.

ILLUSTRATION No. 23. MANIFOLD FOR METER CONNECTIONS.

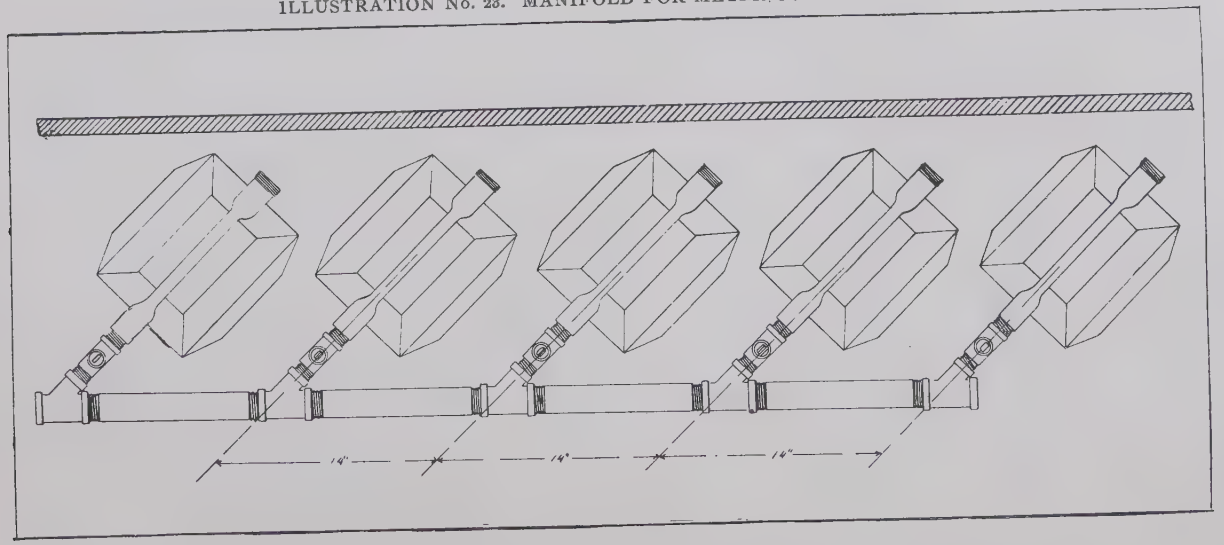

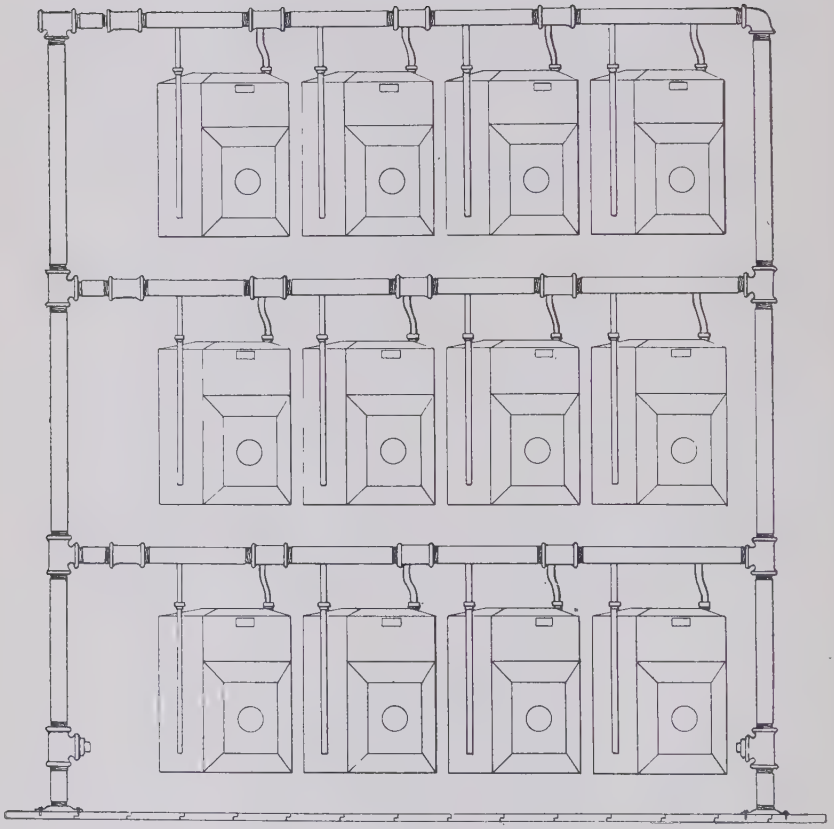

ILLUSTRATION No. 24.
MANIFOLD FOR RIGID METER CONNECTION.

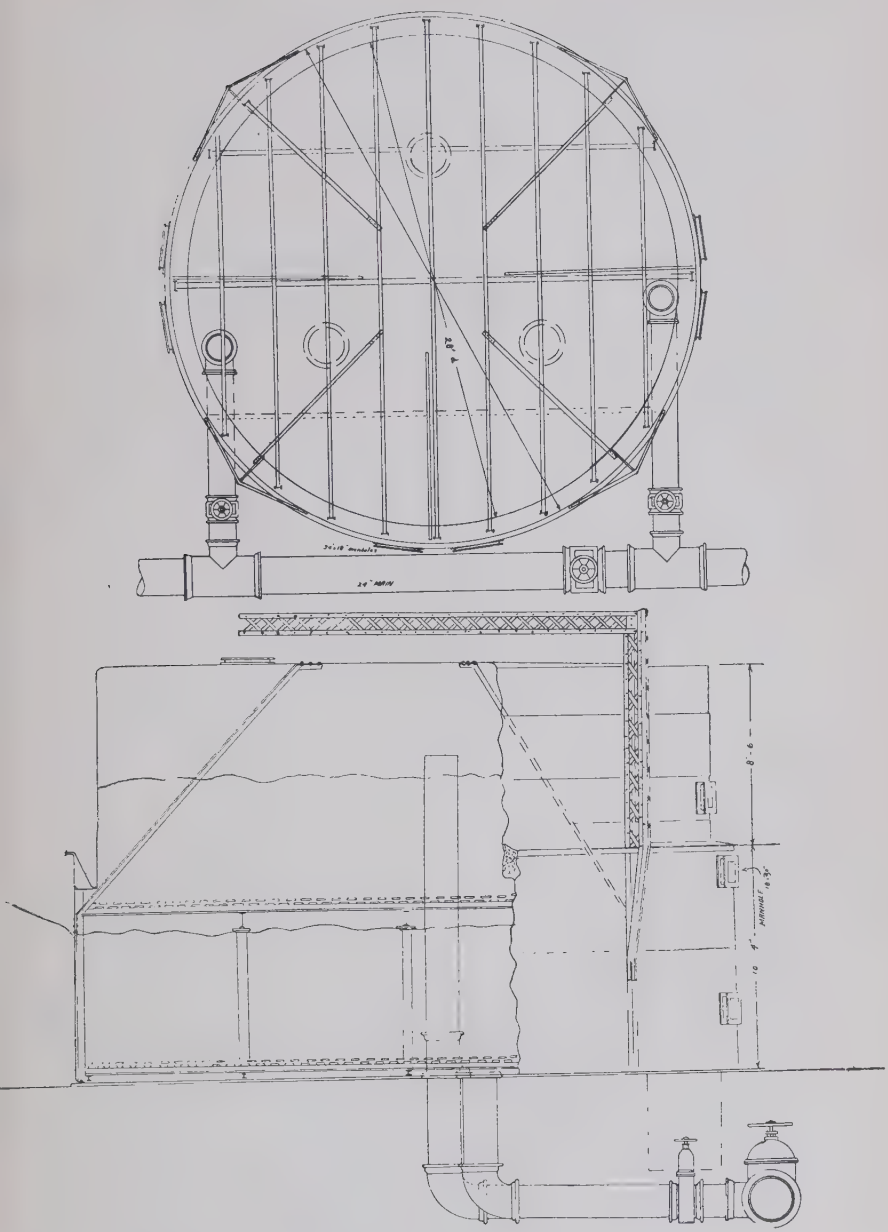

ILLUSTRATION No. 25.
PROPOSED METHOD OF CHANGING HOLDER INTO PURIFYING BOX.

No. 24. Converting a Holder Into a Purifying Box.

The accompanying sketch shows a method of converting an old holder into a purifying box.

V. F. Dewey.
Detroit, Mich.

(See Ill. No. 25.)

No. 25. Distance Street Pressure Regulations.

The district regulator is placed at point between the high pressure and the low pressure systems. A section of main marked "Y," with a good number of consumers, is cut out so that its whole gas supply enters at one point "A." At this point a throttling valve is installed.

Instead of the usual method of connecting up the diaphragms to outlet of the regulator, the cut-out section "Y" is connected to district regulator diaphragm chamber by a 2-inch pressure line.

The regulator is set at 25/10ths, and the valve at point "A" is throttled so that as the gas demand in district "Y" increases, the drop in pressure through the opening at point "A" becomes greater and the pressure in main "Y" becomes less, which in turn opens district regulator, thus raising the pressure in the system and automatically maintaining pressure desired at "B." To keep the outlet pressure from exceeding any desired limit, the diaphragms are connected by a 1-inch line to outlet of regulator. A 1-inch Crawford regulator "A," Ill. No. 27, is set in this line. The gas opening to under side of diaphragm is closed and a gas connection "B" is made to the top of the diaphragm. The diaphragm and gas pressure are counterbalanced by a spring in the top of the regulator. The small regulator can be set so that it can open at any desired pressure and close down main regulator to that pressure.

Where it is necessary to raise the maximum pressure at the outlet of the district regulator higher than that at which it would be good practice to deliver gas to the consumer in order to get sufficient pressure at point "B," the valves C, C′ c″, etc., can be installed, cutting off lateral mains from feed

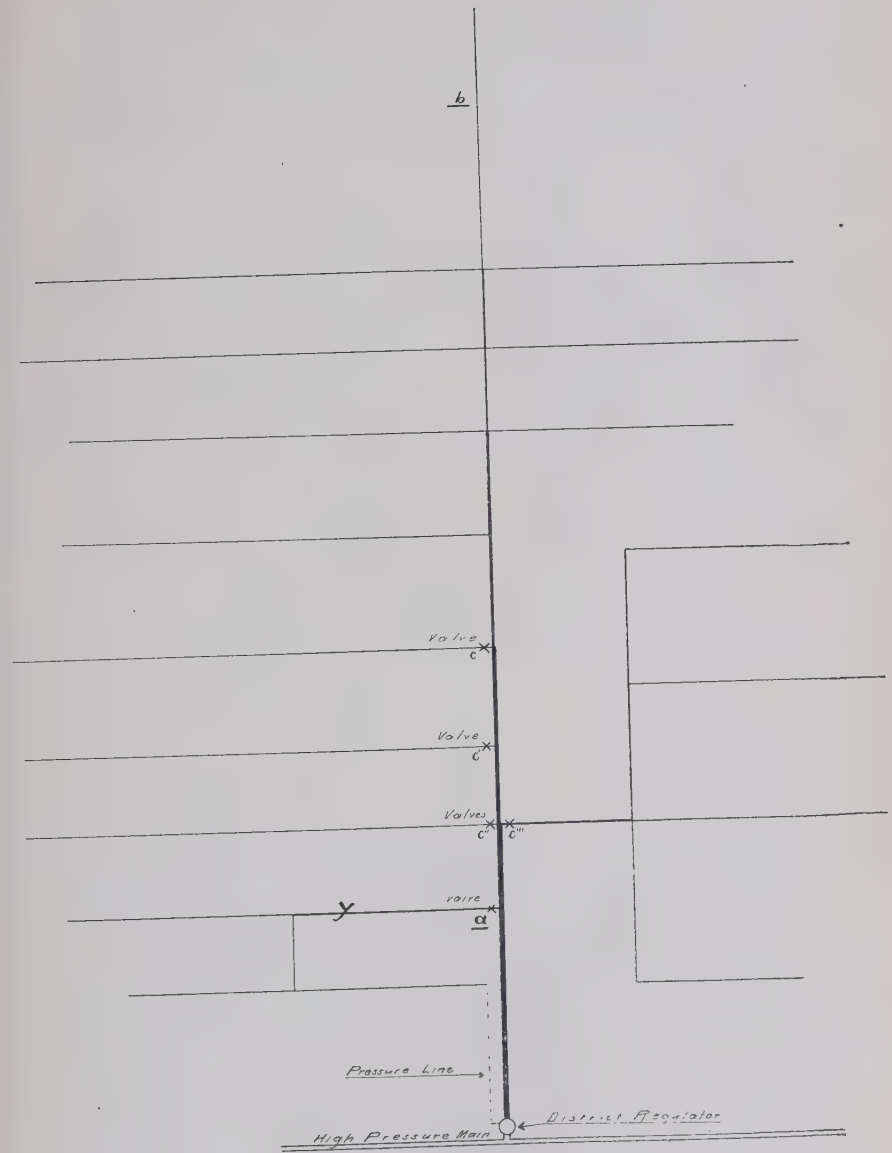

ILLUSTRATION No. 26.
DISTANCE STREET PRESSURE REGULATOR.

main. Any desired pressure can be obtained in these mains by throttling these valves, setting same at time of peak load. The effect and operation is the same as on system "Y."

V. F. DEWEY.

(See Ills. Nos. 26 and 27.) Detroit, Mich.

No. 26. HOT COKE CAR.

Where conditions are such as to protect steel coke cars from the action of large volumes of hot coke coming out of retorts with a rush, the fitting up of cars as shown will extend the life very much. The car receives the coke from retorts above and is pushed away from bench and quenched under a hood to receive the steam, carrying it out of the building.

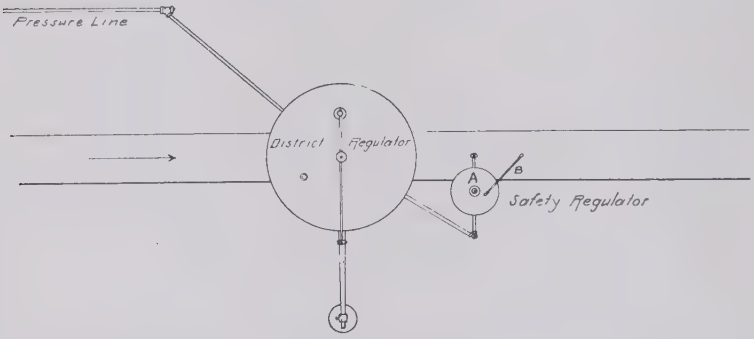

ILLUSTRATION No. 27. DISTANCE STREET PRESSURE REGULATOR.

This device is only to protect the body of car while being filled. The outside of car is made of No. 10 steel, with ¾-inch pipe perforated with holes, running around the top, under angle iron frame and along the top of gable bottom of car. The car is provided on the inside and ends with a light steel liner No. 14 gauge, bolted on with ⅝-inch separator leaving an air space between the body of car and liner. The water spray is directed on the inside of the liner. As shown on drawing the liner extends down to the hinge of door thereby conveying the water to side dump door. Without this liner, part of water would pass out through the joint at hinge and

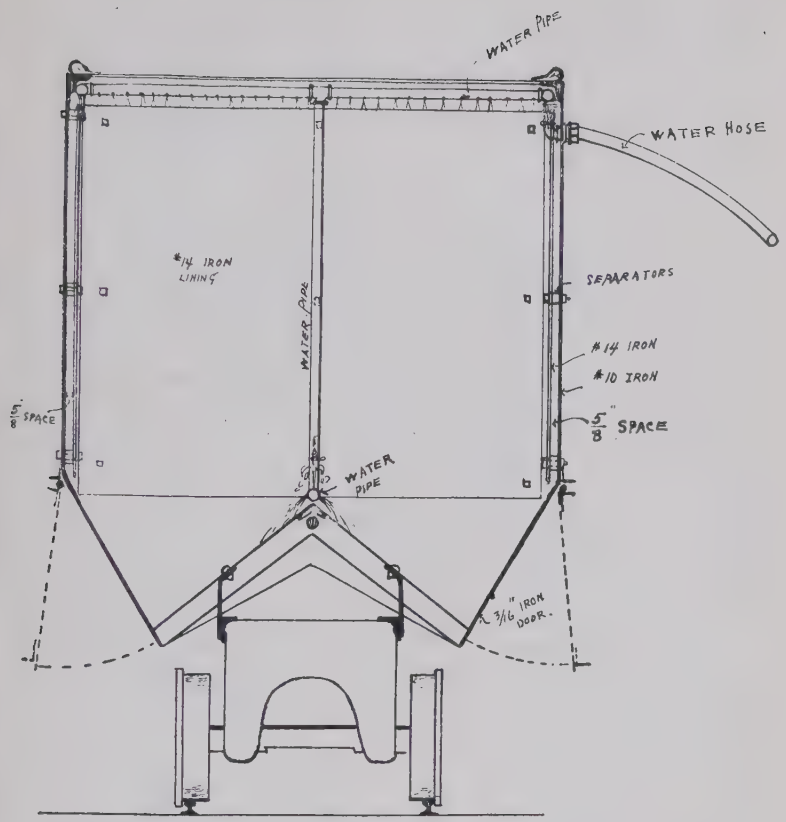

ILLUSTRATION No 28.
SECTION THROUGH CENTER OF COKE CAR. CAPACITY. 50 BUSHELS.

fail to pass over door of car. The opening at this point allows the rush of steam which is formed by the water on gable bottom and door, to go up through the space between the main body of car and liner and out at the top of car. This steam helps to protect the liner. The sides and ends of car always become the hottest, due to the draft having the least resistance there. When liners are burnt out due at times to careless workmen not turning on water, they can be easily

renewed by bolting on others, cut and ready for that purpose. The average life to the body of car without this liner is 6 months, with the liner 12 months using car continuously day and night.

FRANK HUBER,
Louisville, Ky.

(See Ill. No. 28.)

No. 27. SPRAY FOR DAMPENING IRON SPONGE.

Where purifying material is elevated and conveyed to boxes through chutes as shown, the water spray gives the sponge an additional wetting, spraying on the sponge as the box is being filled. As it is important to have the proper degree of moisture in the material, the device enables the foreman to adjust the amount of water desired, wetting it uniformly. The spray is made by boring a number of small holes into the end of a ¾-inch pipe cap screwed on the end of pipe bolted to the centre line of chute. A valve is provided close to the end of chute in easy reach of operator. Hose connection should be provided at top in order that one length of hose will do for a number of chutes. In addition a baffling plate is fastened to the pipe by an iron band, pivoted in order to adjust the spray, directing the water into the stream of sponge as it comes out of the spout.

FRANK HUBER,
Louisville, Ky.

(See Ill. No. 29.)

No. 28. SUPERHEATER FOR DECARBONIZING.

A hole 6 inches in diameter is made in the bottom manhole plate of the superheater and a cap, such as is used on top of stand pipes, is bolted on as shown. When burning out of superheater is required the cap is cracked partly and a torch or lighted piece of waste is held over to guard against reports, such as is done in touching off mouth pieces on retorts. The cap being hinged any size opening can be adjusted that will be required to burn out carbon.

FRANK HUBER,
Louisville, Ky.

(See Ill. No. 30.)

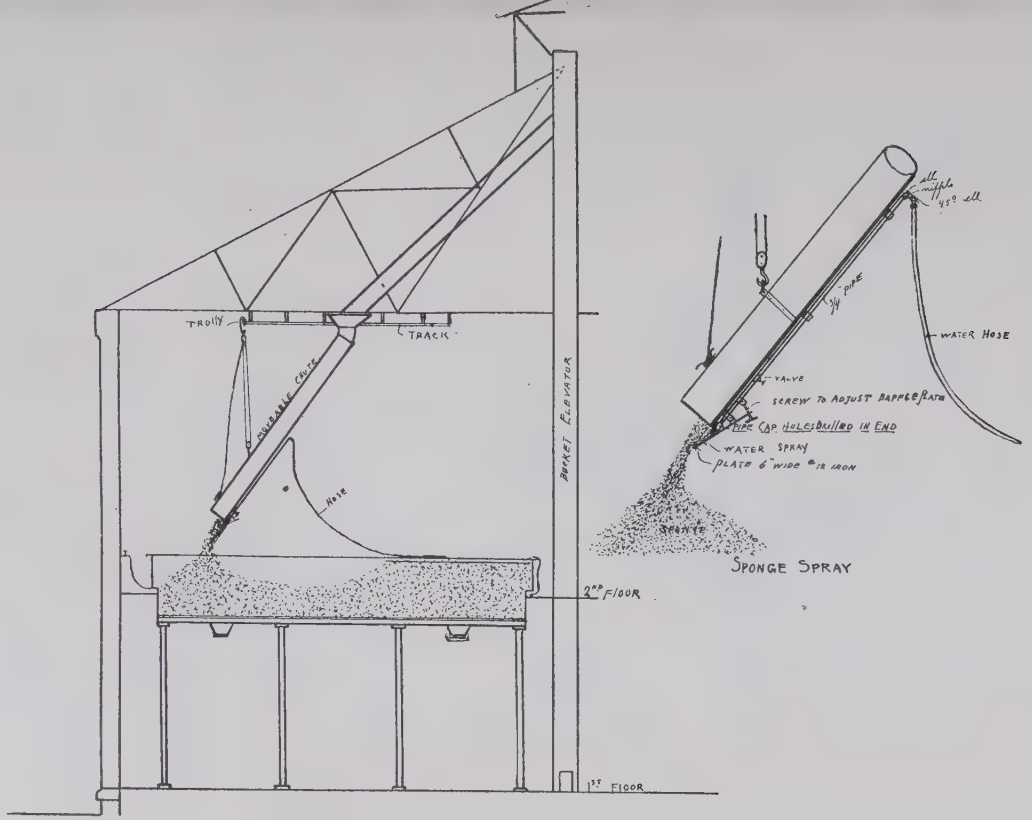

SECTION THROUGH PART OF PURIFYING HOUSE.

ILLLUSTRATION No. 29.

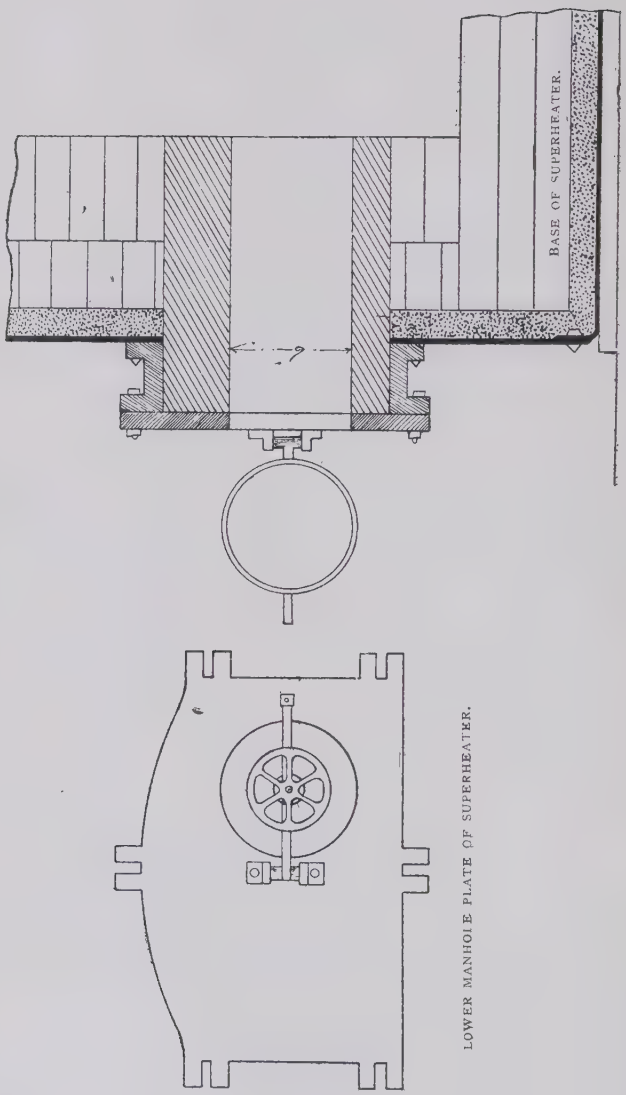

ILLUSTRATION No. 30.

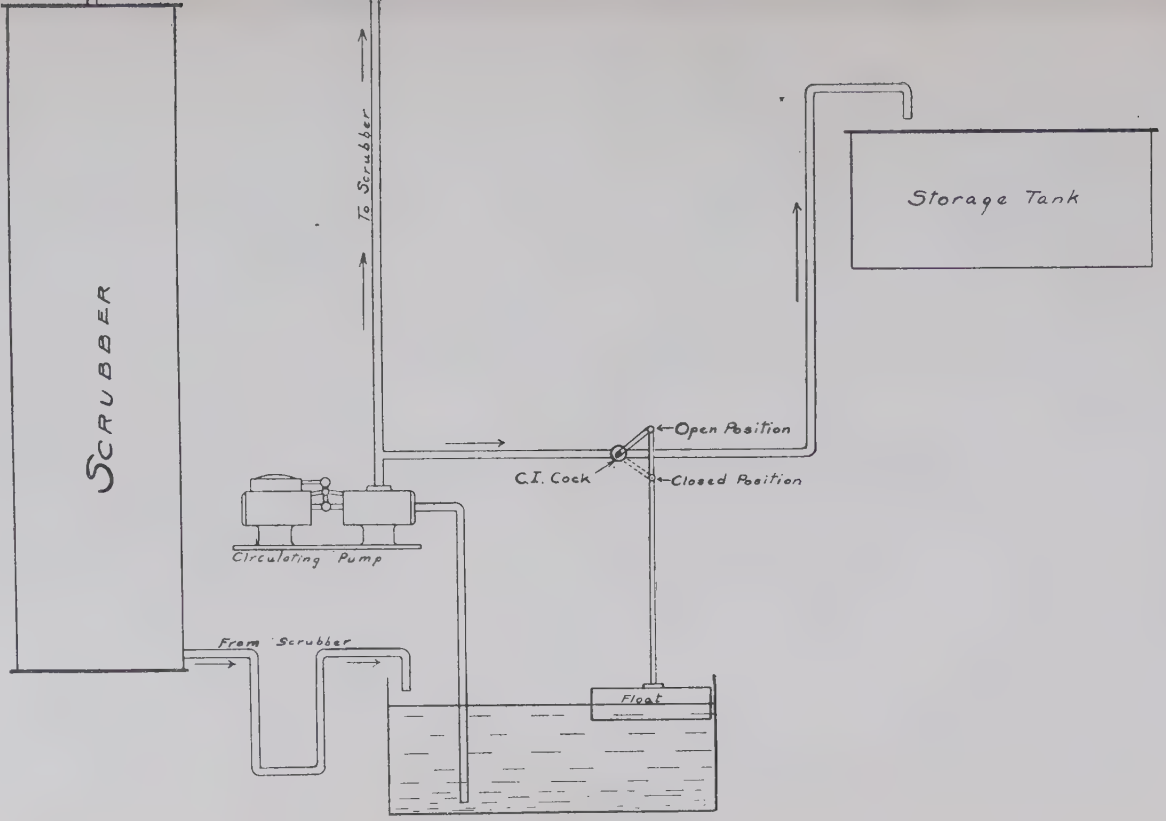

ILLUSTRATION No. 31.

METHOD OF HANDLING AMMONIA LIQUOR TO STORAGE TANK.

No. 29. Method of Handling Ammonia Liquor to Storage Tank.

This arrangement was adopted to avoid the use of a separate pump for elevating liquor to the storage tank and has given excellent satisfaction.

R. G. Griswold,
Denver, Colo.

(See Ill. No. 31.)

No. 30. Curves for the Flow of Gas.

These curves are plotted according to Prof. Unwin's formula. The first one is designed to solve distribution problems and the second for selecting the size of fuel runs to special appliances. It will be found that any problem within the limits of the curves can be solved very quickly and accurately. For example: An appliance using 500 cu. ft. per hour is set 70 feet from the meter. If we can sacrifice 2/10 inches of pressure, what size pipe must be run? Starting at the point marked "2/10" run up to the line marked "70 feet," from here run to the left to "500 cu. ft." This coincides with the line marked "1½-inch pipe," which is the size necessary.

Again: 60,000 cu. ft. of producer gas of 10/10 gravity must be transmitted 1,000 feet with 3/10 inch loss of pressure.

What size of pipe is necessary?

(First curve.) Start at "3/10" on perpendicular line marked "Pressure Lost" run to "Sp.Gr. = 1.0" run up to "1,000 feet" run left to 60 M. This comes between 20 inches and 16 inches. If the 16 inch were used what would the loss in pressure be?

Solution: "60 M" to "16 inch" to "1,000 ft."

To gravity = "1.0 to "5/10" which is the pressure lost.

(Editor's Note: These curves have been printed on special paper so that blue prints can be made from them.)

R. G. Griswold,
Denver, Colo.

(See Ills. Nos. 32 and 33.)

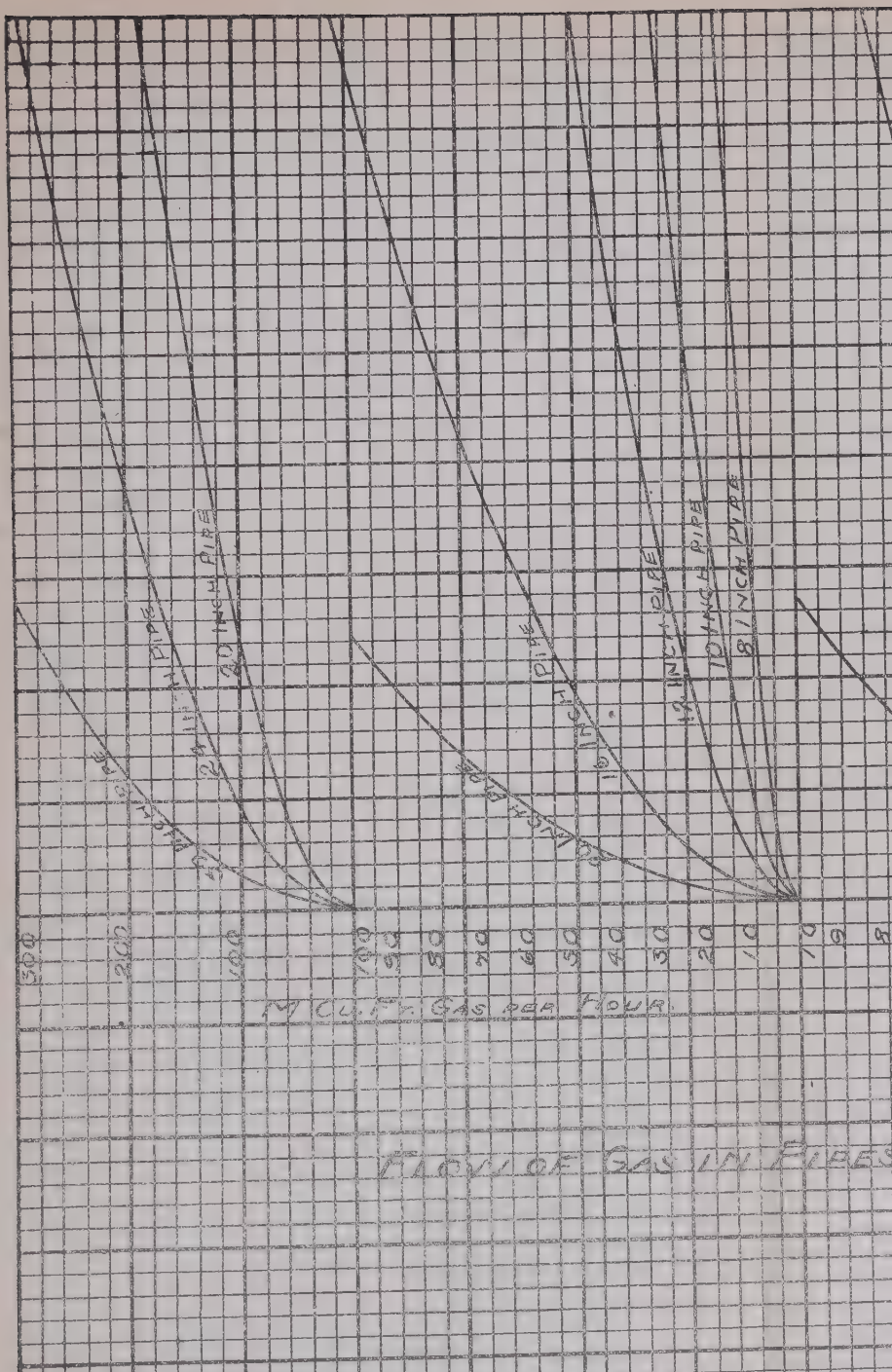

FLOW OF GAS IN PIPES

Plotted by R. G. Griswold, From Prof. Unwin's Formul

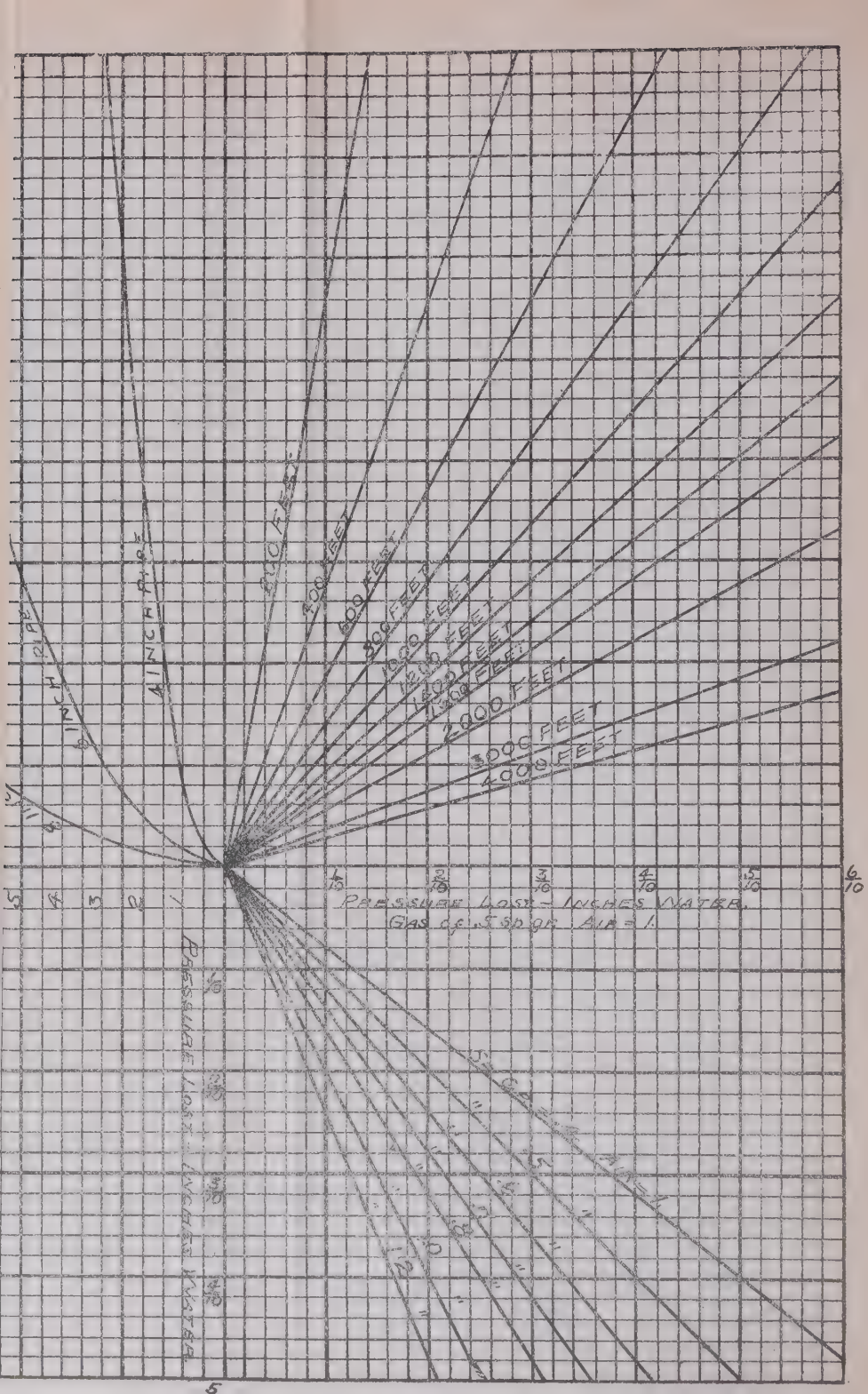

200 FEET
400 FEET
600 FEET
800 FEET
1000 FEET
1200 FEET
1400 FEET
1600 FEET
2000 FEET
3000 FEET
4000 FEET
4 INCH PIPE
8 INCH PIPE
PRESSURE LOST - INCHES WATER.
GAS of .5 Sp gr. AIR = 1.
PRESSURE LOST - INCHES WATER.

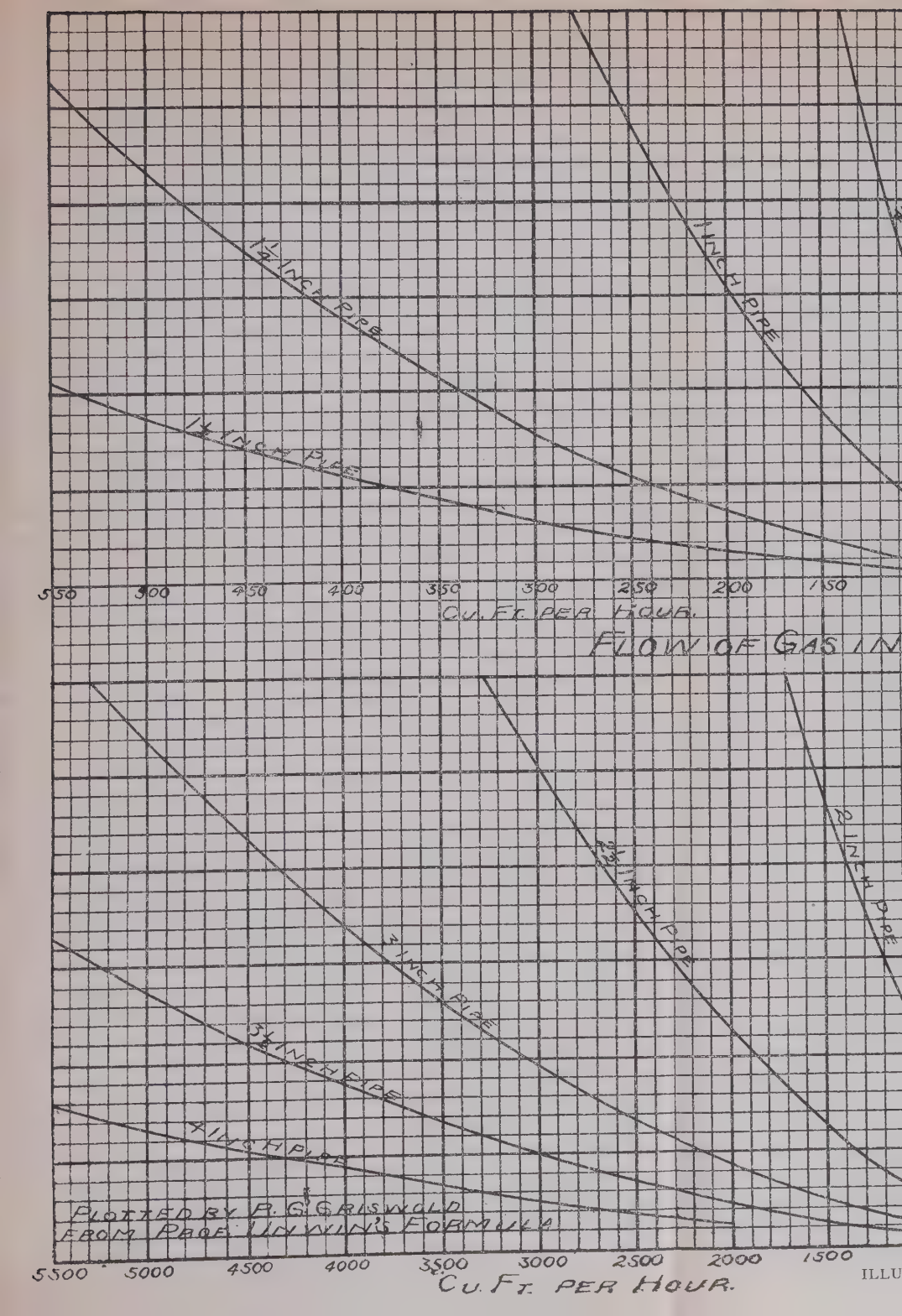
1½ INCH PIPE
1¼ INCH PIPE
1 INCH PIPE
550 500 450 400 350 300 250 200 150
CU. FT. PER HOUR.
FLOW OF GAS IN
2½ INCH PIPE
2 INCH PIPE
1½ INCH PIPE
1¼ INCH PIPE
1 INCH PIPE
PLOTTED BY P. GRISWOLD
FROM PAGE 114 WINN'S FORMULA
5500 5000 4500 4000 3500 3000 2500 2000 1500
CU. FT. PER HOUR.

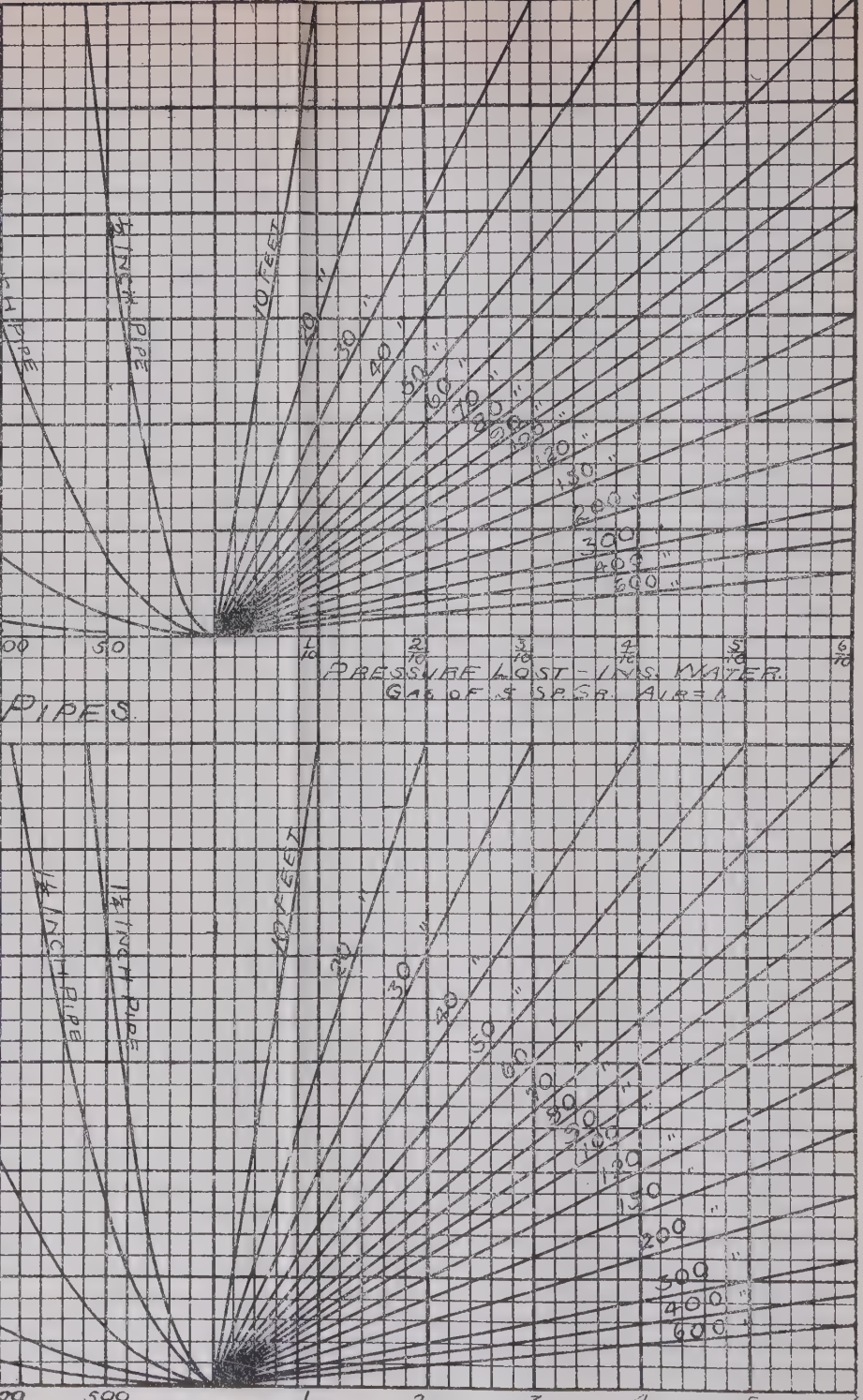
PIPES.
PRESSURE LOST - INS. WATER.
GAS OF .5 SP. GR. AIR = 1.
PRESSURE LOST-INCHES WATER
GAS OF .5 SP.GR. AIR=1
1/4 INCH PIPE
1 1/2 INCH PIPE
10 FEET
100 FEET
1/10
2/10
3/10
4/10
5/10
6/10
10"
20"
30"
40"
50"
60"
70"
80"
90"
100"
150"
200"
300"
400"
600"

RATION No. 33.

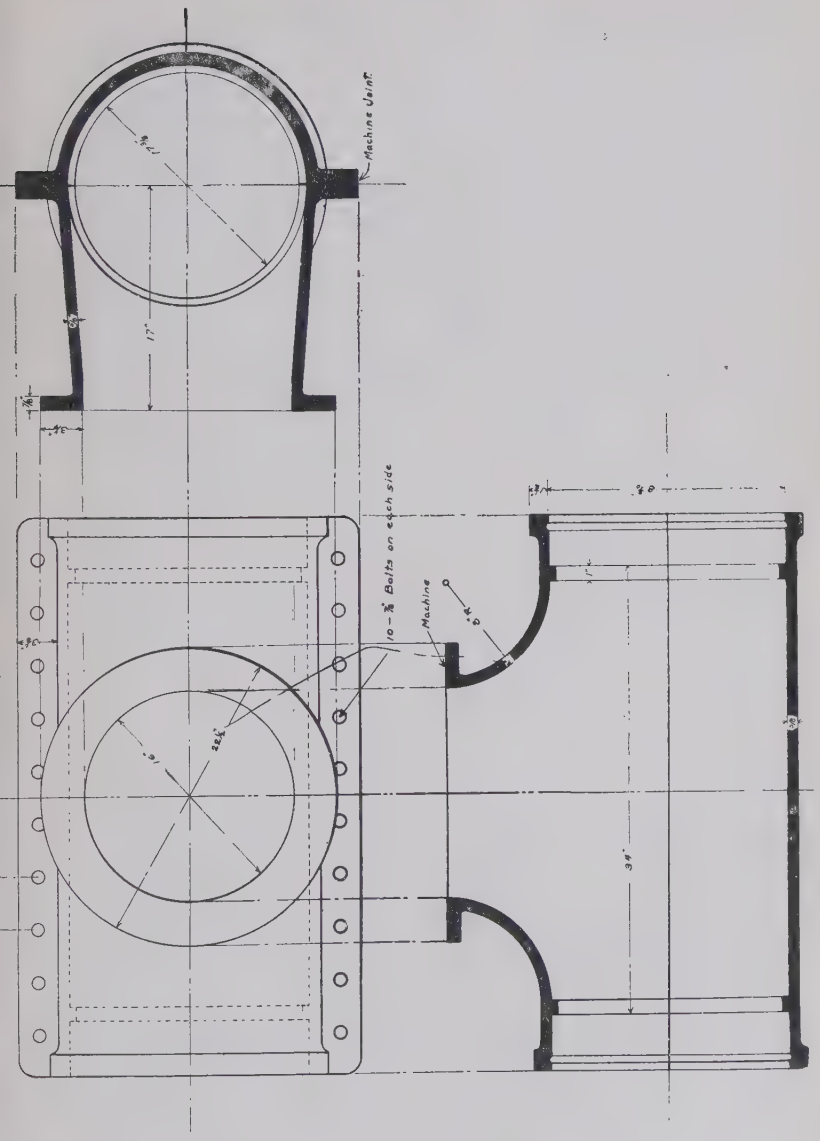

ILLUSTRATION No. 34. A SPECIAL TEE.

No. 31. A Special Tee.

Desiring to run a 16-inch branch from a 16-inch foul main at a point between the exhauster and retort house, this special tee was cast. At the point selected an opening was marked out equal in area to a 16-inch pipe and diamond pointed nearly through. A cut was also made across this piece to facilitate its removal, and a screw eye tapped into each half. The special tee was then bolted on, and the lead joints run and calked. An open valve was then bolted to the flange, the vacuum was adjusted nearly to atmosphere, the pieces broken out and removed and the valve closed. By this means the foul main was not open more than ten minutes and its operation was not interrupted at all.

R. G. Griswold,

(See Ill. No. 34.) Denver, Colo.

No. 32. Proving Head Gauges.

The spring brass meter proving head gauge here shown is designed to measure a movement of the proving head pointer, the movement being gauged as fractional parts of a complete revolution of the pointer.

The gauge is applied so that the small hole will be central over the proving head spindle, and one leg of the notched out division of the gauge will be in line with the original position of pointer at time of starting test, this original position having first been marked with a dot of ink or chalk on the index glass. The other leg of the notched out division will show whether or not the proving head pointer has moved the fractional part of a complete revolution, as per the particular division of the gauge applied.

Where slow motion or burner tests are made according to a stated movement of the proving head pointer in a given time, or where it is desired to measure the movement of the pointer (stating size of proving head), in order to determine gas leakage, this gauge will be found to be of great service.

The United Gas Improvement Company,
Philadelphia Gas Works,

(See Ill. No. 35.) Distribution Department.

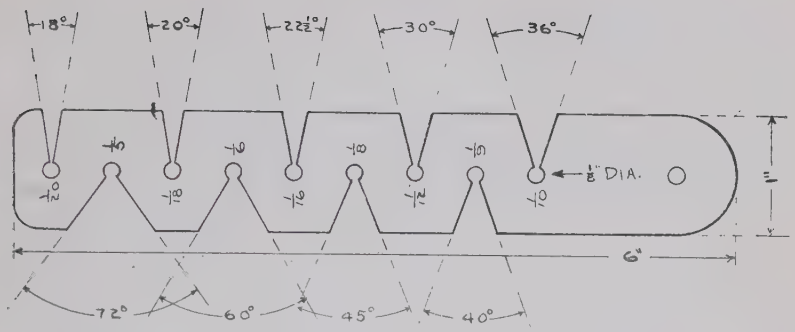

ILLUSTRATION No. 35.
GAUGE FOR FRACTIONS OF PROVING HEAD.

No. 33. Credit Dial Gauges.

The brass gauges here shown are used in determining the credit indicated on circular, or rectangular, credit dials of prepayment meters at the time of lifting money from the cash boxes.

These gauges should be so divided that each principal division will represent the motion of the pointer caused by the insertion of a quarter; or in other words, will show a 25c credit, for the price at which the gas is sold. This renders the meter readers independent of any divisions which may be printed on the dial, and which may not, and frequently do not, correspond to the selling price at which the meter is set. For instance, the circular dial here shown is divided for $1.25 gas, while the circular gauge shown is one that would be used for $1.00 gas.

In use, the circular gauge is placed so that the sides of the projection correspond to the "Start" and "Stop" lines on the credit dial.

Where the divisions on the credit dial are incorrect for the price at which gas is sold, or where there are no divisions on the credit dials, gauges of the types shown will be found to be of great service.

The United Gas Improvement Company,
Philadelphia Gas Works,
Distribution Department.

(See Ill. No. 36.)

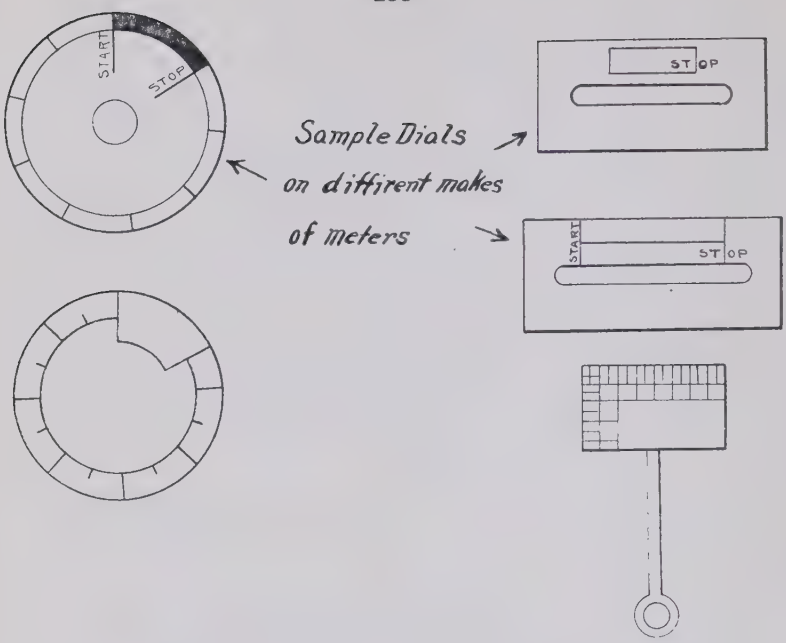

ILLUSTRATION No. 36. CREDIT DIAL GAUGES.

No. 34. Dehydration of Blast Air.

The possibility or rather the practicability of dehydrating blast air for water gas sets is herewith tentatively suggested as a means for promoting fuel economy, increasing the capacity of the apparatus, and reducing the power, and facilitating the operation of the sets.

The conclusion has as its basis the very successful results obtained in blast furnaces practice, an example of which is herewith cited as extracted from the report by Joseph H. Hart, Ph. D., upon the Isabella furnace at Aetna, Pa., showing the following significant figures:

Original Conditions.

The Isabella furnace at Aetna, Pennsylvania, produced 350 tons of iron.

Consumed 2,147 lbs. of coke.

Required 40,000 cu. ft. of air per minute.

Installed two ammonia compressors 225 tons of ice melting capacity. One used as a stand-by for peaks.

Air cooled from 80 degrees to 28 degrees F., or reduced 52 degrees.

Reduction of moisture averaged from 5.66 grains per cubic foot to 1.75, or an elimination of 3.91 grains per cubic foot.

Results.

Air reduced to 34,000 cu. ft. per minute, or a saving of 6,000 cu. ft. per minute, a reduction of about 15 per cent., this being due to increased density of the air handled.

The blowers were slowed from 114 to 96 r. p. m., a reduction of 18 r. p. m. The consequent reduction in H. P. being from 2,700 to 2,013 or 687 H. P.

The refrigerating apparatus required about 530 H. P. and there is still a net saving in power of 157 H. P. when operated at miximum capacity.

The moisture content which passes through the furnace was approximately 40 gallons of water per hour, at times being increased to 300 gallons due to variability in humidity, which is very wide especially in some locations.

About 10 tons of water per day was extracted and the output increased to 450 tons of iron, a gain of 100 tons or about 28 per cent.

The coke consumption was reduced from 2,147 or 1,729 lbs., a saving of 418 lbs. per ton of iron output, or roughly speaking, 20 per cent.

The argument for the use of dehydrated air in connection with water gas sets would be as follows:

First a reduction of fuel due (A) to reduced blasting period by reason of the denser quality of the air, and resulting high flame temperature subtending a saving in loss by radiation, abstraction of heat by aqueous products of combustion, etc.

The increase of capacity of the sets is manifestly due to the higher flame temperature in the combustion of the fuel in the dryer and denser air. Hence shortening of blast period, and permitting an increased duty performed by the apparatus during time unit.

The saving in power would likely occur in the handling of a denser air, and the relief from handling the additional weight of water. It is by analogy that blast furnace figures would show some increment or net economy over and above the power required for the ammonia compressors. In any event the reduction in duty performed by the speed of the fans would at most prove an offset for the outlay of power for the compressors.

With regard facility of operation and general efficiency it is extremely likely that with the dryer and denser air the blast pressure would be materially reduced, and that there would be a consequent reduction of channelling and chimneys through the fuel bed. Hence a lessening of clinkering with a consequent necessity of difficult stoking.

It is also probable that the dry air would subtend conditions of more equal heat throughout the entire fuel bed, inasmuch as that under ordinary conditions the stratum of fuel in first contact with the humid air is chilled, its heat being abstracted while the succeeding strata are over-heated from the lack of this endothermic connection and the combustion of the gases which it forms.

This condition of equal heat throughout the fuel would make a minimum of clinker formation, and a maximum of gas making capacity; the fuel relieved of the "deadening" influence of the aqueous vapor prior to the steam injection.

The above considerations seem at least worthy of consideration. It is understood, of course, that the efficient operation of such a plant would require a works of such size as to maintain a fairly high load factor upon the blast air, that is to say, the layout of sets should be such an arrangement as to produce by their rotation intervals as nearly as possible of constant demand upon the blast. This, although not absolutely indespensible, would tend to the maximum efficiency of the plant proposed.

A tentative layout of the foregoing arrangement is herewith appended.

For a plant requiring, say 15,000,000 cu. ft. of air per 24 hours, a multiple or factor of same being, roughly speaking, proportional.

Reduction of temperature from 85 degrees to a temperature of from 26 to 28 degrees.

Humidity calculated at 80 per cent. saturation.

Equipment consisting of two batteries of direct expansion pipe in coils of 15,000 feet of 2-inch pipe each, and having separate expansion shut-offs, and other connections for use separately or in multiple. The former being in cases of low load or during continuous operation to permit coils to be defrosted or repaired.

Ammonia compressor, or compressors to be the equivalent of compressor 13-inch bore and 30-inch stroke, the condenser being atmospheric in 6 sections of 24, 2-inch pipes, 20 feet long.

The compressor to be driven by 125 H. P., 220-v., motor running at 700 r. p. m., belt connected.

The total cost of the foregoing plant as estimated upon by several ice machinery companies is between $20,000 and $22,000 erected complete.

M. Nisbet Latta,
Olympia, Wash.

No. 35. Method of Repairing Cement Joints on a High-Pressure Main Without Reducing the Pressure.

We recently had occasion to repair some leaking cement joints on a 16-inch main carrying 5 pounds pressure; it not being convenient to shut down the line, the following method was used:

A caulker was supplied with an "Anti-Asphyxiator" which was fastened over his mouth and nose, the tube being led to windward of the excavation, insuring a supply of fresh air. He then cut out the cement joint for a space of 6 inches and caulked "lead wool" into this space for a depth of about one inch, then removed another section of the cement, substituting

lead wool until all the cement in the joint had been removed. A pouring band was then used, and a lead joint run and caulked in the usual manner.

JACOB D. VON MAUR,
St. Louis, Mo.

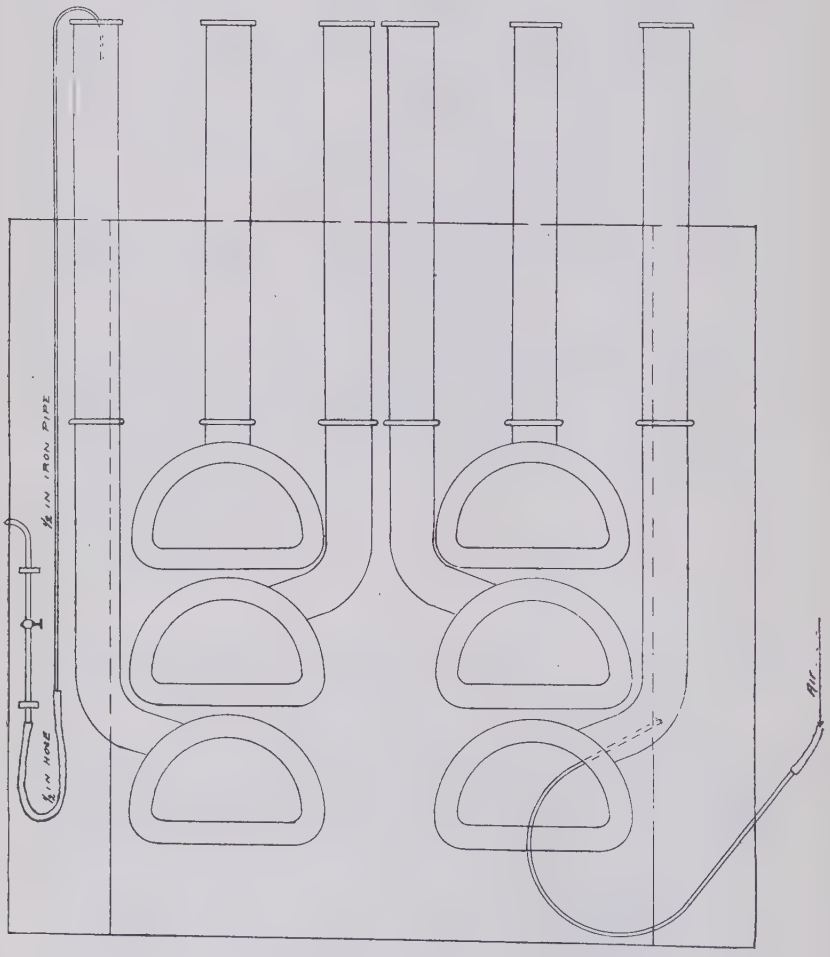

ILLUSTRATION No. 37. STAND PIPE CLEANER.
AIR IS UNDER FORTY POUNDS PRESSURE.
BENT TUBES ARE ½ INCH IRON PIPE.
USED ALSO TO CLEAN FRONT OF BENCHES.

No. 36. Plan for Piping Compressed Air to Front of Benches.

The accompanying sketch shows a plan for piping compressed air to the front of the benches for cleaning the iron work and also for cleaning stand-pipes. This method is both quick and efficient in cleaning stopped stand-pipes and has been used very successfully by our company.

Mr. A. T. Stout,
(See Ill. No. 37.) Spokane Falls (Wash.) Gas Light Co.

No. 37. By-Pass for Gas Arcs.

The accompanying sketch illustrates a handy method of conecting a by-pass on gas arcs, which are set in places difficult of access, as in theatres. It has been the means of securing business for us that would have gone to the electric company. The idea can be extended to any number of lamps.

Vernon K. Gould,
(See Ill. No. 38.) Bangor, Me.

No. 38. Pintsch Compressor Connection.

The Pintsch compressors at Station A, St. Louis, have given trouble every summer due to the water vapor and hydrocarbons in the gas condensing out in the intercooler, and then going over into the H. P. cylinder. This mixture of water and hydrocarbon oil gets into the valves of the compressor and besides water-logging the valves it sometimes rusts the valves so hard over night that they will not open on starting up. The piston and piston rings of the high pressure cylinder also rust very much and will cause the cylinder to wear down on the lower side as much as ⅛ in. in two months.

To obviate this trouble, the pipes A and B were turned down so as to fit very closely into the inlet and outlet pipes of the intercooler and were driven in with white lead as a joiner. The intercooler was then tapped at C and a float

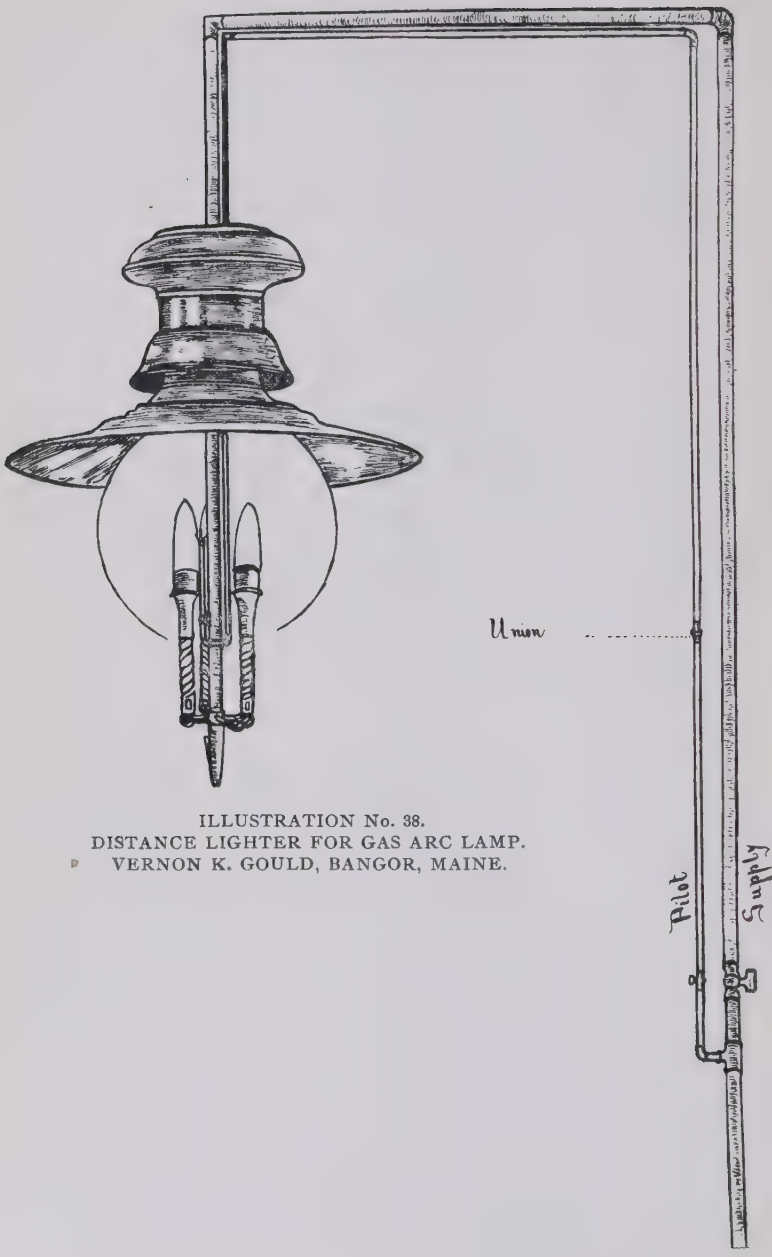

ILLUSTRATION No. 38.
DISTANCE LIGHTER FOR GAS ARC LAMP.
VERNON K. GOULD, BANGOR, MAINE.

steam trap used to carry off the water and hydrocarbon oil as it accumulated to the hydrocarbon well.

D. MacArthur,
St. Louis, Mo.

(See Ill. No. 39.)

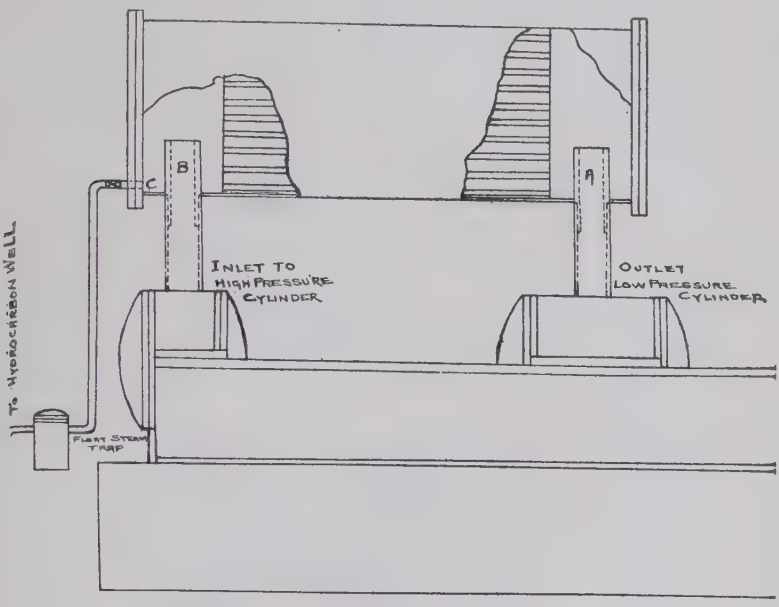

ILLUSTRATION No. 39.
METHOD OF CONNECTING PINTSCH COMPRESSOR.

No. 39. Gas Burner for Drying Moulds.

The accompanying sketch shows a burner for skin drying of sand moulds in Steel Casting Foundries. It is made portable by means of rubber hose connections so that the operator can carry the burner from one mould to another. The burner uses 400 ft. of gas per hour, and the time required varies according to the size of the mould. They find a great deal more economy by using gas when time is taken into consideration than by the old method of carrying the moulds to a drying oven.

Geo. W. Thomson,
Chester, Pa.

(See Ill. No. 40.)

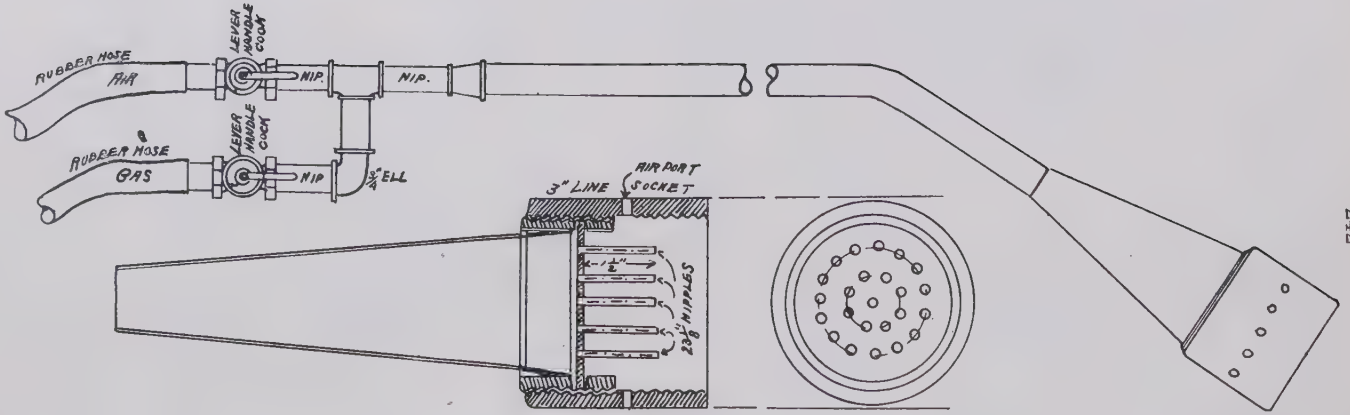

ILLUSTRATION No. 40.
MOULD DRYER.

No. 40. Burner for Drying Barrels.

The burner as shown in the accompanying sketch was designed to take care of the cooper shop in a large plaster factory. The burner works automatically by the weight of the barrel. It requires about five minutes to dry a green barrel with a burner using about 35 ft. of gas per hour.

Geo. W. Thomson,
Chester, Pa.

(See Ill. No. 41.)

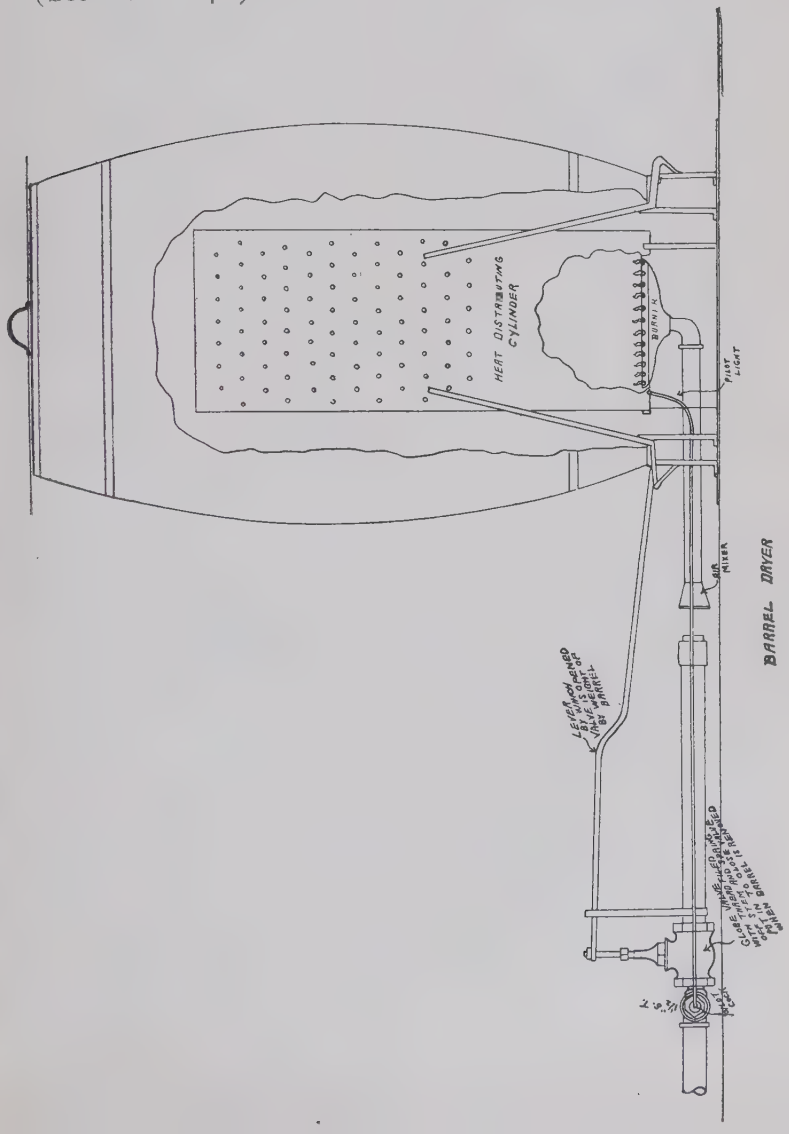

No. 41. Benzol Enrichment Apparatus.

The accompanying sketch (Ill. No. 42), shows the benzol enrichment apparatus for enriching high pressure gas at terminal points, as referred to in my discussion on benzol enrichment. The following is a description of same.

A is a high pressure gas pipe, leading from the high pressure main to a benzol storage tank, the pressure being used to transfer benzol from a storage tank to the operating tank C.

D is a pipe leading from the operating tank to flush tank E.

F is the intermediate pressure between the high pressure governor and the low pressure governor, about one-half pound.

G is a differential gauge.

H is a pressure equalizing cock.

I is a sight feed tank.

J is a syphon to overcome the back pressure of the low pressure main.

K is a gauge column showing the amount of the level of the benzol in the operating tank.

The operation is as follows:

With no differential pressure the liquid stands at the same level in the flush tank as in the overflow pipe in the sight feed I.

As soon as there is a slight difference in the pressure in the intermediate pressure pipe the liquid rises and overflows into the sight feed tank. As it rises, the ball cock valve in E is opened and admits more benzol into E. As the differential pressure doubles this quantity of benzol would be multiplied nearly four times, if it were not for the valve H.

In practical operation the apparatus is set to deliver the required amount of benzol needed during the minimum flow hours, and as the maximum flow hours come on, which are noon and night, the valve is open so that one-half of the differential pressure is equalized.

The apparatus, therefore, is almost entirely automatic and requires only occasional adjustment during the day of the valve H, to get fairly close results in candle power.

If some method can be devised, adjusting this feature, the apparatus would be entirely automatic.

J. D. Shattuck,
Chester, Pa.

(See Ill. No. 42.)

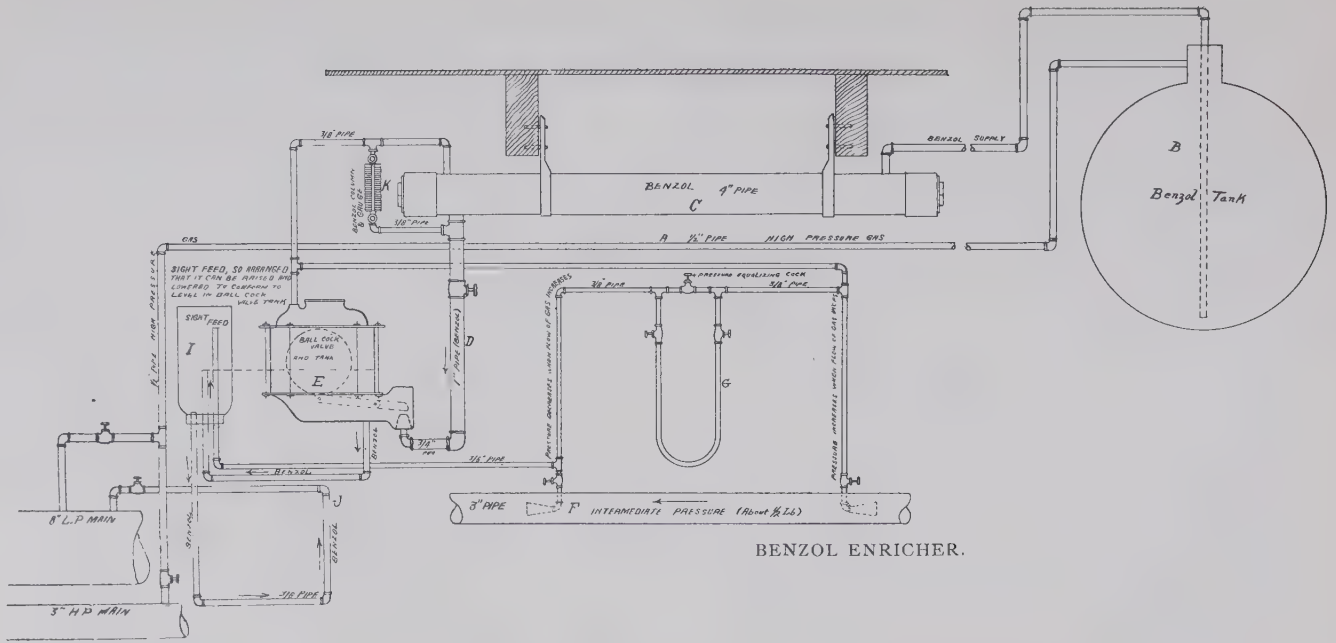

BENZOL ENRICHER.

MR. BUMP: Mr. President and Gentlemen: In serving a second year as editor of the Wrinkle Department, I have perhaps made a mistake. It seems to me that in one year's service in the Wrinkle Department, a man uses up about all his friends for that purpose, and that the second year he has a great deal of difficulty in getting additional material for a report. I do not believe that it is good policy for any man to undertake to edit that department more than one year for that reason.

I want to call attention to one or two of the wrinkles which I think are of special importance. In Wrinkle No. 30, on the flow of gas you will find inserted in the report two pages of curves. These were gotten out with the idea that they could be withdrawn from the report and blue printed, and then mounted on heavy paper, and from those who have used them I have learned that they are much quicker for computing ordinary gas flow problems than the Cox computer; and Mr. Griswold, who got out these curves, is using them entirely in all his work and says that they are very much more satisfactory to him than the computers for rapid work.

Another wrinkle which is of considerable importance is that by Mr. Dewey, of Detroit, on pressure regulation, distance street pressure regulation, Wrinkle No. 25. I think he has brought out a very important point there, which he might well have brought into the discussion on Mr. von Maur's paper. in fact, I think the subject matter is worthy rather of a paper than to be included in the Wrinkle Department report.

Another very handy little device which is included here is one by Mr. Morehouse, of San Antonio Texas, an automatic alarm for a works pressure gauge. This is a scheme whereby he uses a Bristol gauge with an electric contact, to ring an alarm bell in case of the pressure at any time becoming excessive, or at times when there is no one to watch the holder pressure or governor pressure. In small works I think that some little device of this kind is often very handy, especially when the only men at work during the night are out in the retort house.

The rest of the wrinkles are, I think, of about the same general interest, and I will not take time to discuss them now.

THE PRESIDENT: Are there any discussions? Are there any questions to be asked of Mr. Bump? You have the paper before you giving the details, and if there are any questions that you would like to ask Mr. Bump, he is here to answer them.

THE PRESIDENT: Mr. Earnshaw, will you read your paper on Benzol Enrichment?

MR. E. H. EARNSHAW: (Reads paper.)

THE THEORY OF BENZOL ENRICHMENT.

The whole matter of benzol enrichment is governed by a few comparatively simple physical laws. While a knowledge of these laws may not be sufficient to enable one to predict definite results, still a consideration of their application will clearly point out the reasons for many of the apparently contradictory experiences reported.

Every volatile liquid gives off a vapor at all temperatures; this evaporation is slow at low temperatures, but increases rapidly as the temperature of the liquid approaches its boiling point. The force exerted by the vapor in making room for itself by displacing the surrounding air or gas is called vapor tension, and increases as the temperature rises.

Every mixture of a gas and a vapor obeys the following two laws, known as Dalton's Laws:

I. The tension, and, consequently, the quantity of vapor which saturates a given space, are the same for the same temperature, whether this space contains a gas or is a vacuum.

II. The tension of the mixture of a gas and a vapor is equal to the sum of the tensions which each would possess if it occupied the same space alone.

By the application of these laws we are able to predict with certainty the amount of any vapor required to saturate a given volume of gas at any designated temperature.

A familiar example is to be found in the table of correction factors which we all use for determining the volume of gas at 60° equivalent to 1,000 cu. ft. at another temperature, the gas

in both cases being saturated with moisture. The tension of water vapor has been accurately determined for all temperatures, and in calculating the correction factor allowance is made for the volume of water vapor present before calculating the change in volume of the gas due to difference in temperature. For example:

1,000 cu. ft. of gas at 82° and 30-in. barometer consists of 963.6 cu. ft. gas+36.4 cu. ft. water vapor, at 60° the total volume will be 941 cu. ft. consisting of 924.7 cu. ft. gas+16.3 cu. ft. water vapor.

In each case the weight of gas is the same, and the reduction of its volume is due only to the change in temperature, but nearly one-half of the water vapor has been condensed to water and is no longer present with the gas. If now the 941 cu. ft. of gas and water vapor at 60° is again raised to a temperature of 82°, but out of contact with the condensed water, it will occupy a total volume of 980.6 cu. ft. consisting of 963.6 cu. ft. gas + 17.0 cu. ft. water vapor. This is now an unsaturated mixture and is capable of taking up and carrying 19.4 cu. ft. additional water vapor, and thus increasing its volume to the original 1,000 cu. ft.

The laws governing the enrichment of air or a fixed gas like blue water gas with pure benzol, are exactly similar to the case of water vapor. The vapor tension of pure benzol has been accurately determined for various temperatures, and it is entirely possible to predict with certainty the volume of benzol vapor that can be carried with the gas at any determined temperature.

Consequently, the amount of enrichment in candles can be predicted, and with equal certainty the loss in candle power that will be sustained by cooling the mixture of gas and vapor to a temperature below its point of saturation.

Unfortunately, however, the problem as usually encountered is far more complex. The gas to be enriched is not a simple fixed gas, but is already more or less completely saturated with vapors belonging to the same series of hydrocarbons as benzol. The so-called benzol used for enrichment is not pure benzol, but is chiefly a mixture of benzol, toluol and xylol.

These three hydrocarbons belong to the same series, in a liquid form dissolve perfectly in all proportions, but have different boiling points and, consequently, different vapor tensions at the same temperature.

Certain Characteristics of Benzol, Toluol and Xylol.

	Benzol	Toluol	Xylol
Chemical formula	C_6H_6	C_7H_8	C_8H_{10}
Specific Gravity, liquid at 60°	0.8846	0.8720	0.8692
" " vapor	2.6953	3.1792	3.6630
Boiling point	177° F.	230° F.	287° F.
Weight of 1 Gallon, lbs.	7.37	7.26	7.24
" 1 cu. ft. vapor at 60° F.	.2064	.2434	.2805
Cu. ft. vapor from 1 Gallon	35.67	29.76	25.77
Vapor tension at 60° F. in inches of mercury	2.346	0.720	0.236
Cu. ft. vapor in 1000 cu. ft. saturated mixture of gas and vapor at 60° and 30 in. pressure	78.20	24.00	7.88

Regnault has shown that the vapor tension of mixed liquids depends upon the mutual solubility of the liquids in accordance with the following laws:

I. Where two liquids exert no solvent action on each other—such as water and benzol—the tension of the vapor which rises from these is nearly equal to the sum of the tensions of the two separate liquids at the same temperature.

II. When two liquids dissolve in all proportions—as benzol and toluol—the tension of the vapor of the mixed liquid is intermediate between the tensions of the separate liquids.

The first law of Regnault shows that the presence or absence of water vapor has no effect on the enrichment with benzol, but it is the operation of the second law that causes all the trouble and uncertainty.

The exact composition of the enriching liquid being usually unknown, it would be impossible to predict its vapor tension for any particular temperature, and, consequently, its permanent enriching effect would be uncertain even if the gas to be enriched were free from any other similar vapor.

But if the gas to be enriched is a water gas or coal gas already saturated with vapors of the benzol series, the problem becomes still more complicated.

Let us consider such a case.

Take a water gas already saturated with hydrocarbon vapor, of, say, 20 candlepower, and it is desired to effect a permanent enrichment of 2 candles by the use of commercial "benzol." Let us suppose in the first place that the tension of the vapors, with which a gas is saturated, already present in the gas is the same as the vapor tension of the enriching liquid. It is evident in this case that no enrichment can be obtained, since the quantity of vapor of a given tension required to saturate a gas is always the same for the same temperature, and this fixed amount is already present in the gas.

If the vapor tension of the enriching liquid is higher than that of the hydrocarbons in the gas, a degree of enrichment can be obtained.

The commercial success of such enrichment will depend upon the difference in vapor tension. It is evident that an increase in quantity of vapor, and, therefore, an increase in candle power, can only be obtained by increasing the vapor tension of the hydrocarbons in the gas. If the tension of the enriching liquid is very high, the addition of a small amount may raise the tension of the combined vapors so that the gas will carry the amount of vapor necessary to give the desired increase in candle power. In this case the full enriching value of the added vapor is developed.

If the vapor tension of the enriching liquid is but little higher than that of the vapors already in the gas, then the desired enrichment can only be obtained at considerable cost and the full value of the enriching liquid cannot be utilized. Enough of the "benzol" must be added to bring the average vapor tension up to the required point, but as the total quantity of vapor will now be much greater than the gas can carry, the surplus will be condensed. This condensate will have a tension higher than that of the original vapor in the gas, and lower than that of the enriching "benzol."

If the tension of the "benzol" is less than that of the vapors in the gas, not only will there be no enrichment but there will be an actual loss of candle power. This is evident because any addition of this "benzol" will lower the average tension of the vapors and reduce the quantity that the gas can carry, and there will be condensed from the gas a quantity of liquid greater than the amount of "benzol" added.

So far, I have assumed that the gas remains at a constant temperature after enrichment, but this is not usually the case. The added candle power is, of course, permanent for any higher temperature; but if the gas is subjected to a lower temperature, the change in vapor tension must necessarily cause a deposition of liquid hydrocarbons and consequently a loss in candle power.

No one can predict with accuracy how great the loss will be for any given drop in temperature and this can only be determined by actual experiment.

At first, the hydrocarbons condensed from the gas consist chiefly of toluol and xylol, but as the temperature is lowered and the deposition of vapors continues, the proportion of benzol constantly increases both in the hydrocarbons of the condensate and in the vapors remaining in the gas.

To understand clearly the cause of this action, let us assume that the lowering of the temperature occurs in successive steps. After each drop in temperature, the gas contains more hydrocarbon vapor than the quantity corresponding to the average vapor tension at the lower temperature and the surplus is immediately condensed. The tendency is for the vapors of lowest tension to condense first, leaving the gas saturated with vapors of a higher tension. The operation of the law of average vapor tensions, however, causes an effort at re-adjustment to the end that the average vapor tensions of the condensed liquid and the hydrocarbon vapors may become the same. If the gas should remain in contact with its condensate for a sufficient length of time, this re-adjustment would undoubtedly become complete, but in actual practice it is only partially effected, and the condensate contains a

greater proportion of the hydrocarbons of low vapor tensions than is found in the mixture of vapors remaining in the gas. It is also clear that each successive condensate will consist of hydrocarbons of a lower average boiling point than the preceding one.

To determine the quantity and character of the hydrocarbons condensed from water gas by lowering its temperature, the following experiment was made:

A water gas of approximately 24 candle power, made from Texas oil, was passed through a cooling coil arranged in such manner that the condensate deposited between two determined temperatures could be collected and measured.

Condensate of oil from water gas:

	Candle Power	Gallons Condensate per M		Average Candle Power Lost in Candles	Apparent enriching Value of Cond. Oil in Candle Feet per Gallon
70° F. to 60° F.	24.2	.063			
" " "	23.3	.065	.064 Av.	0.91	14,200
" " "	23.1	.064			
60° F. to 50° F.	24.4	.079			
" " "	24.7	.082			
" " "	23.6	.075	.077 "	1.55	20,100
" " "	23.6	.072			
50° F. to 40° F.	24.0	.074			
" " "	23.9	.079	.073 "	1.72	23,500
" " "	23.4	.065			
40° F. to 30° F.	23.0	.071	.071 "	2.46	34,600
70° F. to 30° F.			.285 "	6.64	23,300

It will be noticed that the quantity of condensate collected for each 10 degrees drop in temperature remains very constant, but the apparent enriching value increases as the temperature falls. This is probably due chiefly to the greater quantity of high tension hydrocarbons in each successive condensate.

The distillation of the condensate between 70 deg. F. and 50 deg. F. and between 50 deg. and 35 deg. shows very clear-

ly the increase in the percentage of benzol in the condensate collected between the lower temperatures.

	Distillation Test of Condensates From Water Gas	
	Bet. 70° and 50° F.	Bet. 50° and 35° F.
To 202° F. (chiefly Benzol)	17.1% vol.	28.1% vol.
202° to 260° (chiefly Toluol)	28.4% "	43.2% "
260° to 302° (chiefly Xylol)	33.7% "	16.7% "
Above 302° (heavy tar oils, etc.)	13.9% "	6.6% "

These principles cover in brief, the whole theory of benzol enrichment, and their application to practical problems may explain some apparent contradictions and perhaps prevent some of us from attempting the impossible.

For example, it is evident that disappointing results are sure to follow any attempt to enrich at the works, water gas which is subsequently to be exposed to a considerably lower temperature. A better effect will be obtained by enriching at an outlying holder station, since the gas has been exposed to a lower temperature, than at the works, but, even in this case, a high grade of benzol will be required during the winter months. During the summer months it is quite possible to satisfactorily add a certain amount of enrichment to any gas which has been exposed during manufacture to a lower temperature than it will subsequently meet in distribution, and in this case a benzol of low grade will frequently do the work. In general, any gas can be economically enriched with benzol if it is not already saturated with hydrocarbon vapors, and will not subsequently be exposed to a temperature that will lower the tension of the mixed vapors so that they will condense out in a liquid form.

I have in mind an instance where coke oven gas is distributed a distance of 70 miles at an initial pressure of 30 lbs. During the cold weather this gas suffers a loss of candle power due to the compression and subsequent cooling, and it reaches the distribution holder at the end of its journey considerably under saturated with hydrocarbon vapor. It has been the practice to restore the lost candle power by enrich-

ment with benzol, and for this purpose a high grade "90% benzol" was at first employed. Subsequently it was found that the gas was so far from being saturated with hydrocarbon vapors, that a 60% benzol gave a satisfactory permanent enrichment.

During the spring months the ground is still cold, causing a loss in candle power, though less than during the colder months, and it was found that the 30% benzol collected from the pipe line drips in the winter was good enough to give the small permanent enrichment then desired.

The approximate composition of the several "Benzols" used for enriching in this particular case are shown by the following distillation tests:

	90% Benzol.	50% Benzol.	Drip Oil.
To 181° F.	1.		
181° to 194°	50.	6.	3.
194° to 212°	35.	53.	26.
212° to 230°	8.	25.	18.
230° to 248°	0.	12.	14.
Above 248°	0.	5.	35.

In conclusion, I wish to emphasize that every case in which it is desired to use commercial benzol as an enricher must be treated as an independent and separate problem, and considered in the light of the known laws. The degree of saturation of the gas, the amount of enrichment desired, the temperature to which the gas will be exposed after enrichment, the grade of benzol available—these are the controlling factors, and they must all be reckoned with.

Mr. F. B. Wheeler: Mr. President and Gentlemen: Mr. Earnshaw has expressed in the clearest possible manner the effect of the laws of vapor tension upon gas enrichment with any kind of oil vapor. It is to my mind the most illuminating statement available for our use.

However, Mr. Earnshaw has not discussed the important effect of pressure on the carrying power of gas for benzol enrichment.

The vapor tension of a liquid is constant for any temperature, and the quantity of the vapor of such liquid in a saturated mixture of gas and vapor is proportional to the ratio between the vapor tension and the total pressure.

For example: The vapor tension of benzol at 60 deg. F. is 2.346 inch of mercury, and the volume of benzol vapor in 1,000 cu. ft. of a saturated mixture of gas and benzol vapor at 60 deg. F. and 30 inch barometric pressure is 78.2 cu. ft.

If now the pressure should be increased to 60 inch, or doubled, the volume of benzol vapor in 1,000 cu. ft. would be reduced one-half to 39.1 cu. ft.

This means that the carrying power of any gas for benzol, or any other enriching oil vapor, is inversely as the pressure. Therefore if the temperature and other conditions permit the addition of a certain amount of fixed enrichment at a given pressure, and this pressure is increased, the carrying capacity of the gas is proportionally reduced. As a matter of fact we seldom meet with really saturated mixtures of gas and enriching oil vapor, because it requires an element of time to saturate the gas.

We see this in the saturation with water vapor of our gas passing through the station meter. It is about 78 per cent. of being saturated.

The combined operation of the laws of vapor tension, of pressure, and per cent. of saturation seldom permit the addition of more than 22 cu. ft. of real benzol vapor per 1,000 cu. ft.

The mere statement of the possible effects of benzol enrichment proper are not sufficient to present all of its proper advantages.

Sometimes cases are found where even if the balance sheet from the enrichment side shows no gain, other conditions occur making the benzol enriching operation profitable.

Let me illustrate with examples taken in order:

First—Benzol enrichment of partially carburetted water gas.

Second—Benzol enrichment of coal gas.

Third—Benzol enrichment of coke oven gas.

In water gas plants we often meet with generators of small size, or very expensively operated. The reduction of the amount of oil fed per M into the machine, and the substitution of a suitable amount of benzol, permits the reduction of the blast necessary to get a proper heat, since now the quantity of oil to be gasified in the set is greatly reduced. This action has been known to save 10 lbs. of generator fuel per M.

As coal cost, say $4.00 per ton, the saving was 2 cents per M in generator fuel alone. But this was not all, because the reduced blast saved on boiler fuel per M also.

The enrichment of a 13 candle water gas to 21 candle gives about 23,500 candle feet enrichment per gallon.

On benzol enrichment of coal gas, in addition to its enriching value, and its cleanly convenience of application, we have almost complete freedom from naphthalene troubles in mains and services. In plants where a regular daily labor and expense charge of $6.00 or more per day was expended for naphthalene stoppages, nothing is now spent. This is, of course, an effect very valuable in itself, and moreover, very comfortable for the management.

All coal gas men have long known that we can alter the chemical composition of our coal gas and raise or lower its B.T.U. content, by running the hydraulic main at different pressures or on a vacuum. If we coke the coal slowly, and at a slightly lower temperature than normal standard running, we produce in the gas a higher per cent. of methane CH_4.

The presence of methane in increased percentage permits the reduction of the amount of benzol necessary to carry a desired candle power, as the presence of surplus methane raises the candle power of a given volume of benzol higher than the presence of CO or hydrogen. By Frankland's test:

Benzol diluted with hydrogen gives 348.5 candles

CO	"	366.9
CH_4	"	466.5

or the CH_4 mixture gives 33.8 per cent. more light than a hydrogen mixture. This is due to higher incandescence from

the flame temperature, since the B.T.U. of these different gases in the mixture stand as

Hydrogen	343
CO	341
CH_4	1065

Therefore, there are works where close attention to the way in which the coal gas is produced would be advantageous. Knowledge of the chemical composition of the gas is always important and profitable.

Benzol enrichment of coal gas at different works gives from 20,000 to 30,000 candle feet per gallon used, taken on a year's average figure. A coal gas high in methane without appreciable benzol content will reach the theoretical figure of 42,000 candle feet per gallon.

In coke oven gas enrichment by benzol, the gas is usually of much lower initial candle power than at gas works.

The past nine months average at one of our plants shows

Initial candle power	7.48
Enriched candle power	17.01
Candle power rise	9.53
Benzol per M	.405 gal.
Enriching value per gal.	23530. candle feet

These official values were obtained at the end of a pumping line two miles long, under one-half pound pressure, and are given as illustrating the lifting power of benzol for low candle power gas.

The instant readiness with which the benzol enriching apparatus can be put into operation in any emergency, for either greater candle power or for a larger make and same candle power, renders it the most valuable piece of machinery in the works.

Since I have arrived here I have received reports from eight companies that have used benzol continuously for the past twelve months, in all kinds of weather, and four of those companies saved more than 50 per cent. in the cost of their gas enrichment over the year previous. The others all saved from 18 to 40 per cent.

Mr. C. F. Prichard: The theory of the use of benzol, I think, has been very clearly explained, so that almost any one who chooses could use it now in the way that would produce good results. But to further stimulate you and show what may be done by any one who is disposed to do it, I would quote three examples of the commercial benefits of using benzol. One of those is a works making about 500,000,000 cu. ft. a year of mixed water gas and coal gas, about 50 per cent. of each, at the past year's prices of benzol and oil, a saving resulted in that plant of about $4,000 for one year as compared with the year previous. In a coal gas works, making about 150,000,000 cu. ft. a year, the saving over the previous year, at last year's prices of oil and benzol, was about $2,000. In a still smaller works, using coal gas alone, and making about 50,000,000, the saving was $600 a year. The distributed gas was of the same candle power in each year.

The President: Mr. Shattuck.

Mr. John D. Shattuck: I have found benzol very useful for the enrichment of coke oven gas and coke oven and water gas mixed. We used 80 per cent. benzol and I will give you the figures of a few experiments we made: In February we made 17,000,000 coke oven gas with an initial candle power of 11.8. We raised this 6.2 candle to 18 and mixed it with an 18-candle power water gas. The enriching value was 24,200 candles. The amount of water gas was about 9,000,000 cu. ft. so that 76 per cent. of the benzol was used to raise two-thirds of it, and 24 per cent. was used to raise the 18-candle power gas to 19.9 (practically 20 candles), showing that its value for enriching coke oven gas was a great deal more than for enriching the water gas. In March we made an average of coke oven gas of about 10 candles, water gas about 17½ candles. The air temperature the first month was 25, the air temperature at the end of the experiment, about the 19th, was 38. Some of the figures were 50, showing the temperature had risen considerably, but in those nineteen days we got 39,000 candles per gallon, which was probably largely due to absorbing benzol from holder mains, etc., and an increase in temperature. In the thirty days of April we made a 13.9

candle power water gas. This was an experiment to enrich water gas alone, as we had found in our previous experiments that we could not do much with benzol to an 18-candle power water gas. On account of our coke oven experiment we thought we would raise the candle power of the water gas. We raised the 13.9 candle water gas to 21.2, a 7.3 raise, and there was an enriching value of 20,500 candles. In the twenty days in May we got an enriching value of 23,300, raising 13.6 candle water gas to 20½. At that point we discontinued the experiment because it was cheaper to make the larger volume of gas than it was to start another set for the sake of using benzol as an enriching agent. We made a test on candle power enrichment of this same gas for the purpose of transmission over long distance. For instance, the Chester low pressure candle power in the thirty days of April was 21.1, and the receiving candle power at fourteen miles was 15½; showing a drop of about 5.6 candles. We re-enriched at that point with the use of benzol. For the twenty days in May at Chester the initial candle power was 20½, and the final candle power at Darby was 18.1 candles, showing a drop of only 2.4 candles. We found benzol was a good agent for the restoring of candle power to the gas at the terminal ends of a high pressure line and that we could restore the candle power with cold benzol.

With a long line I recently put in in another town we had a peculiar experience. The Welsbach mantles blackened at the hour of greatest demand, which is the hour of least pressure. It was a line nine miles long, with a few customers on the end of the line. The mantles blackened at the hour of maximum demand, and cleared again an hour or so later as the pressure rose. Our Media superintendent designed an arrangement for enriching gas at the intermediate stations automatically, using differential pressure to control the apparatus for putting in the exact amount of benzol. I had a sketch made of this but unfortunately it is too small to show. I will write a description in detail, and let it go in the Wrinkle Department. It will be understood better than if I should attempt to explain it here.

THE PRESIDENT: Anybody else?

Mr. A. E. Forstall: Mr. President, there is one of Mr. Wheeler's recommendations of benzol enrichment that I did not quite understand. He said that when used for the enrichment of coal gas it was very effective in preventing naphthalene stoppages in the street mains and services. I do not see how that can be a recommendation for benzol enrichment. The only way in which benzol would prevent naphthalene stoppages in the street mains would be by condensing, when the benzol condensed out of the gas, dissolving the naphthalene and carrying it to the drip. If benzol condenses, it is not enriching the gas, and it seems to me it is rather an expensive solvent for naphthalene.

A point that has been suggested to me in regard to benzol enrichment is that companies, in Wisconsin for instance, where the gas is to be tested according to calorific value should be a little careful about benzol enrichment, because while they may get very satisfactory candle power, they may not have the calorific value called for by the requirements. For instance, a coke oven gas of lower initial candle power than usual brought up to 18 candle power by benzol enrichment, would not have the calorific value that a coal gas of say probably 16 candle power to start with, would have; and while I haven't the exact figures, I doubt whether it would have even the calorific value of an 18 candle power carburetted water gas.

While we are discussing the theory of benzol enrichment, it may be well to call attention to the necessity of good practice in it. I have never had any experience in benzol enrichment personally, but I have examined the gas operations in one or two places where they were enriching with benzol, and owing to faulty practice in putting the benzol into the gas, they were just throwing their money away. The benzol was going in and I did not take time enough to find where it was coming out, but it was not going to the consumer's burner, or anywhere near it, so that while it theoretically should have been doing the work, it practically was not getting into the gas at all. I think it is very important that anybody going into benzol enrichment should look very carefully into the methods

of getting the benzol vapor into the gas, and not only into the gas, but distributed over the whole volume of gas going out from the enrichment apparatus.

THE PRESIDENT: Mr. Wheeler.

MR. WHEELER: In regard to Mr, Forstall's last remarks, the fault of the works that he inspected was not due to benzol enrichment, but due to the management purely.

MR. A. E. FORSTALL: I just want to say that I did not say that the fault of not putting the benzol into the gas was anything against benzol enrichment; in fact, in one of these cases I was largely instrumental in changing the management of the company.

MR. CORSCOT: We have used benzol about sixteen months with most satisfactory results. We have not had any candle power in that time below 17.1. When we used oil, we used it in a separate retort, and when the conditions were right, we made very good water gas. In the last sixteen months that we have used benzol it has been at one-third of the cost of oil enrichment. Our purification has been cut in half, with elimination of tarry vapor. Our coal tar has improved for the same reason. It has made a saving to us of some $1,600 a year.

MR. TAUSSIG: In regard to Mr. Wheeler's remarks about getting too high heat units in oven gas with benzol enrichment, it might be said that the heat units per candle from benzol enrichment are about one-half those obtained from oil gas enrichment, and therefore he probably had a gas, very rich in methane, to bring his enriched oven gas to its high heating value.

THE PRESIDENT: Does anybody else want to speak on this subject before the reader of the paper closes?

MR. EARNSHAW: There is very little for me to say because the discussions brought out have not touched the title of the paper; they have rather gone on to the question of practice, and I cannot question in any way the statements of fact. I am very much obliged to Mr. Wheeler for calling

attention to the omission in the paper of the effect of pressure on enrichment. What he says is, of course, absolutely true. I believe I have nothing more to say.

MODERN WROUGHT GAS PIPE.

THE PRESIDENT: Mr. Frank N. Speller will read his paper on Modern Wrought Gas Pipe.

MR. SPELLER: (Reads the report.)

MODERN WROUGHT GAS PIPE.

Progress in manufacture is best made by cordial interchange of experience between consumer and producer. A clear discussion of the facts and conditions of service—not hearsay—will soon develop the weak points of an article which the truly progressive manufacturer will then endeavor to overcome to the advantage of all concerned. It often develops that a new material requires a variation in the method of handling to obtain the best results; here the manufacturer with his experience can help the consumer in his difficulty. It is at such meetings as this that interchange of experience is best brought out, and it is with this object in view that I have accepted the invitation to open this subject.

MATERIAL FOR SERVICE LINES:

At the time welded pipe was first made, puddled iron was the only material available, and for years after steel became known it was not considered for this purpose. In the development of metallurgy of steel it was found that a soft iron practically free from carbon and with a much lower percentage of foreign impurities could be made by other process than the old method of puddling. This metal was first tried about 1886 in the manufacture of pipe, difficulties were naturally encountered at first but have been gradually overcome as experience has accumulated. Although classed under the general head of "Steel" this form of refined iron cannot be

hardened by quenching from a red heat, and is easier to weld than puddled iron. Now we have a metal which is especially adapted to meet the modern demands in quality, quantity and low cost.

These requirements are obtained in what we call "Pipe Steel" by placing the responsibility of the output in the hands of a few highly skilled operators, by running the rolling mills and welding departments in close touch with the steel works, and by keeping the plant exclusively engaged in the manufacture of this steel day after day. This method of operation is essential to the best results in the mill, and at the same time the uniformity of welding quality so obtained ensures a high degree of uniformity in other respects, for passing through the welding furnace is an ordeal that effectually reveals irregularities and unsound metal.

At present about 80 per cent. of the demand is for steel pipe. In some cases where strength and ductility are important, steel is insisted upon, but for the majority of uses where the metal is up to standard, either can be used. The steel has, however, now-a-days, a general advantage over the iron in being more uniform in quality and, considering everything, there seems to be no doubt that experience has shown it to be the standard material for welded pipe of the future. Early experience in the use of steel for this purpose taught that certain special treatment was necessary in order to obtain the best welding quality and to enable it to stand the temperature required without undue crystallization. A certain amount of steel pipe doubtless got out in those days which would today be scrapped by the mill inspectors and charged up to the Department from whence it came. The fact that manufacturers of iron bedsteads and electric conduits ask for this soft steel pipe, and bend so much of it cold, into all manner of shapes without practically any trouble is satisfactory evidence to us that this is the most reliable material for the purpose. Vibratory tests on steel and iron signal pipe given below show the relative endurance of these materials under such stresses.

TABLE 1.

General Physical Properties and Chemical Composition of Wrought Iron and Steel Pipe.

Chemical Analysis	Steel	Wrought Iron
Silicon	.01	
Sulphur	.050	.030
Phosphorus	.100	.170
Manganese	.30	trace
Carbon	.07	trace (irregular)
Oxides	.10	1.20-2%

Physical Properties		*(Pulled Longitudinally)
Tensile strength	58,000 lb. per sq. in.	46,000 lb. per sq. in.
Elastic limit	34,000 lb. per sq. in.	28,000 lb. per sq. in.
Elongation	22% in 8 in.	12% in 8 in.
Reduction in Area	55%	25%

*These figures would be considerably less if tests were made transverse to direction of rolling; the steel is practically of the same strength in all directions.

TABLE 2.

Test made on 1-inch Pipe on the Olsen Staybolt Machine—Deflection 5/32 inch in 8⅛ inch.

Average Results

Series 1 (6 pieces of each)	Load to Deflect 5/32	No. of Revolutions Steel	Iron
	772 lbs.	16178	6940
Series 2 10 pieces of each		13555	8764

The man who insists on buying wrought iron gets a pipe of about one-half the bursting strength, less ductility (as illustrated by samples) and pays a good premium for it, into the bargain.

The introduction of a change in material in the manufacture of an article having such a widespread use as pipe is naturally accompanied by a certain amount of difficulty and prejudice on the part of the consumer, and opposition from those especially interested in resisting the change. The objections which have been raised to steel pipe will be briefly reviewed under the following heads:

THREADING:

The greater toughness of the steel caused some difficulty in the trade before the dies were provided with sufficient rake and relief so as to cut more readily. In the days when wrought iron predominated, a die shaped like that in Fig. A would make a reasonably good thread on iron but if used on steel

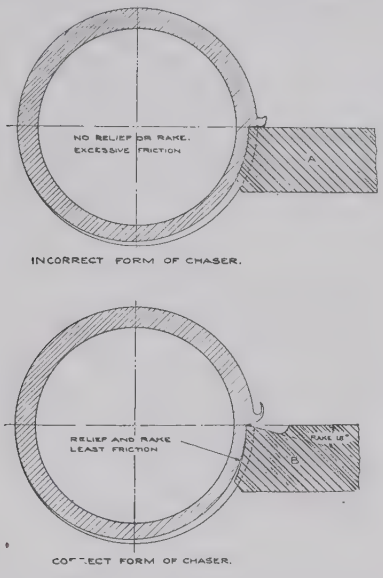

FIG. 1—DIAGRAM SHOWING CORRECT AND INCORRECT FORM OF THREADING DIES.

would work hard and probably produce a rough thread resulting in a leaky joint. A correctly shaped die is illustrated in the diagram Fig. B. Considerable economy results from attention to dies, both in time and material, as well as in saving of gas through leakage. The threads should be clean cut so that the metal to metal joint will be gas tight when screwed up, without the aid of some dope. It is easier to make such a joint on steel pipe with proper dies on account of the homogeneity of the metal.

DURABILITY:

As to the general impression which prevailed a few years ago that steel was fundamentally more subject to corrosion

than wrought iron it will be worth while for anyone who holds to this opinion or has doubts on the subject, to carefully examine the basis of his conclusion, or the reports by which he has been influenced. Professor Howe, in a paper before the American Society for Testing Materials last June, sums up his experience and gives results of tests made in his laboratory and in the field, extending back to 1897. He concludes from his own tests and all the information which he has been able to procure, and after a thorough study of many comparative tests by others, that there is no important difference in the rate of corrosion between iron and steel used in the manufacture of pipe but he shows by a test on steel skelp made eleven years ago, in comparison with that made in 1906, that a decided improvement has been made in the uniformity and freedom from pitting in modern steel pipe. This has been the result of increased experience and much experimental work, by the leaders in the development of this steel. The influences which tend to make it more durable have been the subject of investigation for some time and finally resulted in a number of improvements including a process of working the metal at a soft heat which gave such promising results as to warrant its adoption in regular practice two years ago. Prof. Howe's tests indicate that pipe steel is now equal and probably superior to wrought iron, being less liable to local corrosion or pitting. This conclusion conforms with that of T. N. Thomson as a result of personal service tests reported in a paper before the American Society of Heating and Ventilating Engineers, Jan. 1908, and with our own special tests and numerous service tests, accidental and intentional, which we have investigated as they have come to our attention in the regular course of business.

Pitting of Pipe:

It is now generally believed that corrosion is primarily solution of iron in water. In case oxygen is not present the water soon becomes saturated with iron and corrosion stops with no visible serious results. However, if oxygen is present, the

dissolved ferrous iron is oxidized to the ferric or insoluble state, and is precipitated as rust on the metal, allowing more iron to dissolve; thus the process is made continuous. The oxygen seems to have a further important effect, as pointed out by Dr. W. H. Walker of Massachusetts Institute of Technology, in accelerating corrosion by combining with the hydrogen released when iron goes into solution, thereby depolarizing the Kathode. Thus, it will be seen that corrosion is a simple electro-chemical phenomena involving an interchange of electricity between two elements between which there is a certain difference in potential, and that this action is kept up through the agency of oxygen, moreover, other conditions being equal, it has been shown that the extent of corrosion is proportional to the available oxygen.* Pitting or localized corrosion occurs when the difference of potential between two places on the surface of the iron is maintained in the same direction for a considerable time. This may be caused by variations in composition in the metal or accidental irregularities on the surface of the iron, due to adhering foreign material such as mill scale, rust, carbon, etc. The latter are far more electro-negative to iron than the ordinary variations in composition of the metal, and usually determine the location of the pit.

It is the duty of the manufacturer to make a metal which will offer as much resistance as possible to corrosion, but where conditions are favorable the iron will dissolve and return to the form from whence it came, unless these forces are resisted by adequate protection from moisture and air. A paper might better be devoted to the subject of protection. While experience seems to indicate that no universal protective measure can be relied upon, a special study of local conditions will usually suggest the best means of protection. To secure long life in a pipe line, conditions must be favorable or be made so. It is along these lines by a study of means of protecting iron from air and moisture that future progress lies, important experiments to this end under atmospheric condi-

*Dr. W. H. Walker.

tions are already under way by the Paint Manufacturers' Association in co-operation with committees of the American Association of Testing Materials. It would be well if similar tests on the protection of buried pipe lines were carried out.

Those especially interested in the manufacture of wrought iron have never proved by comparative tests that the claims that they make are borne out in service. They rely on a popular opinion which direct evidence usually contradicts and argue that as wrought iron carries 1½ to 2 per cent. of cinder interlaminated with the iron, corrosion is thereby retarded. This would be reasonable if the cinder were evenly distributed in layers, but a microscopic section of wrought iron will show that the cinder lies in slightly flattened strings, and is so irregularly distributed that loop holes entirely free from cinder are not hard to find. Moreover, it can be demonstrated that the cinder is more strongly electro-negative to iron than any other impurity present and tends to increase corrosion by the local electric currents thus set up.

We have taken considerable time and trouble to investigate every case of failure by corrosion which has come to our attention in the last few years and have found that wherever iron and steel pipe had been together under the same conditions, that while there was generally little to choose between the two, the steel frequently showed decidedly less depth of pitting.

In an investigation of piping on the Isthmian Canal work last Spring in company with the various division engineers, we examined 160 cases where pipe had corroded in service (out of which a dozen were found where steel and iron had been in use) together in the same line, not one of which showed any decided advantage in favor of the wrought iron. Of the others, where no comparison was possible, the life of the pipe appeared to vary from twenty years and still good, to one year and completely eaten through, according to conditions. The longest-lived samples included both steel and iron, while the worst case last mentioned was a ¾-inch galvanized wrought iron water service system of American manufacture.

FIG. 2—3-INCH WROUGHT IRON TUBE FROM WATER WELL, OREGON-MIDWAY OIL CO., CALIFORNIA.

NOTE.—A piece has been cut out of this and the steel tube (Fig. 3) which was connected with it for test purposes.

FIG. 3—3-INCH STEEL TUBE FROM WATER WELL, OREGON-MIDWAY OIL COMPANY, SHOWING THE EXTENT OF CORROSION IN THE WORST PIECES WHICH WERE CONNECTED DIRECTLY ABOVE THE WROUGHT

It is impossible in the limits of this space to go into details on many such cases, but some instances which came to my attention recently while investigating conditions in the California

FIG. 4—WROUGHT IRON COUPLING FROM 8¼ INCH, 24 POUND STEEL CASING, LOMPOC, CALIFORNIA.

oil fields, illustrate the character of this evidence. A 3-inch string of tubing in a water well at the Oregon-Midway Oil Company property was used for six years without perceptible

damage. Instead of continuing to pump direct, it was decided to use the air lift system and another string of the same tubing was installed, which lasted just three months, when nearly every length was found to be perforated at the threads, except the bottom piece, which was entirely eaten through. This piece was pointed out to me as being the worst example of the trouble and on examination proved to be wrought iron, while the rest of the line was steel. Photographs of these pieces are shownn in plate.

Near Lompoc, California, some steel casing had been pitted through in places and removed from a well. The corrosion was quite local, and usually affected only one side of the casing. The couplings which were of forged wrought iron, were found just as badly pitted, and in some cases completely eaten through, although much thicker than the casing proper. (See plate)

One more instance may be useful as illustrating many cases of the same kind which have come to our notice. A drying kiln in a large cooperage plant was equipped two years ago with 1-inch and 1½-inch steam heating coils. Considerable condensation took place and a few weeks ago the system gave way in a number of places due to rapid corrosion. Four sample pieces were forwarded to us with the request that in future wrought iron be furnished. Three of these pieces which were perforated, proved to be wrought iron, and the other, which was corroded about half way through, was found to be steel.

My first experiments on this subject were made over four years ago in the laboratory when we suspended pieces of standard pipe materials in hot aerated water. No important difference could be noticed under these conditions, but we were led by this and other considerations to distrust the popular opinion as to the durability of iron, the error of which has been since further demonstrated in a more practical manner by abundant evidence like the above.

As to the basis of the general opinion on this question, to which I have referred, at present we can only surmise. Those holding it nowadays for the most part do not distinguish be-

tween pipe steel and other grades of steel which do not require such careful attention in manufacture, and probably do not take into account the fact that conditions governing corrosion are much more active today than twenty years ago, or that whereas steel pipe has been passing through a period of evolution, and together with other branches of the industry is becoming better understood year by year, the tendency is toward deterioration in wrought iron on account of the passing of the old-time puddler and the practice of using steel scrap, often of unsuitable quality, for the sake of economy. Furthermore the properties which distinguish these materials are not generally understood and in many cases their identity has been mistaken.

Many of the cases of comparative corrosion investigated by us have been on steel and iron pipe made before any special attention was given to the quality of the steel in resisting corrosion and this evidence certainly does not lead to any important conclusions one way or the other. Surely then it is reasonable to expect that the work already done toward improving pipe steel will produce still more satisfactory results in the future.

In connection with the matter of the adoption of standard pipe metal I might also add that the Railway Signal Association, after a couple of years of investigation, and testing both materials—that is puddle iron and pipe steel of to-day—have finally adopted a specification which calls for soft steel signal pipe on railroads. The same conclusion was reached by the National Fire Protective Association in connection with the sprinkler system. After considering the question of strength, durability and other points, the Committee on Standards adopted steel as the standard.

The general question of threading was taken up, the particulars as to how dies should be constructed in order to cut smooth and clean threads on steel pipe, which is softer and tougher than iron, and therefore requires more attention to dies. Attention to dies is one of the best sources of economy in the shop. We endeavor to make threads without any kind of dope whatever. That can be readily done on steel especially

on account of the uniformity and general homogeneity of the metal.

THE PRESIDENT: Shall we hear from Mr. Stone?

MR. STONE: Some two years ago, in order to satisfy myself which was best, I took some samples of wrought iron and of steel pipe and imbedded them in a cinder bed, and took them out occasionally to see how they were getting along. Up to the present time they have been in about a year and nine months, and apparently there is very little, if any difference between the corrosion on the wrought iron and the corrosion on the steel pipe. If anything, the wrought iron is pitted a little deeper; that is, the pitting on the steel pipe is probably more general all over the surface, but the pitting on the wrought iron pipe is deeper in the spots that are affected.

MR. A. S. MILLER: Mr. President, I have no direct evidence that the wrought iron pipe is better than the steel, but generally, without actual experiment, I am still of the impression that it is somewhat better, and am in the habit of using wrought iron pipe. The steel pipe people have never shown us any distinct advantage in using steel, and we have never made the change. Mr. Speller says that the man who insists on buying wrought iron gets a pipe of about one-half the bursting strength, and less ductility, as illustrated by the sample, and pays a good premium for it into the bargain. I want to say our experience was that in buying steel pipe for other purposes than putting under ground, we found that we were paying a greater price for it than in buying wrought iron, and that is one additional reason that we have had for holding to wrought iron, that when the move was made to commit ourselves to steel, the price seemed to go up.

MR. DONALD MCDONALD: I was asked to discuss this paper and it was referred to as the "Enclosed Paper," but it was not enclosed; consequently I am not armed with any argument. I am one of those misguided individuals who pays an extra price for wrought iron pipe, knowing all the time that it is less in tensile strength, less in ductility, does not cut as good a thread, and does not work as easily in any other way.

It has just one advantage in my experience, and that is it will not pit clear through, and my experience with steel pipe is that it will. Now, I want to say that I got that experience six years ago, at which time I quit using steel pipe entirely, and began buying wrought iron. I do not know whether this paper says that steel pipe never did pit through, or whether it says that what they make now will not pit through. If the paper admits that steel pipe used to pit through, but doesn't do it now, I am open for conviction, but to prove that it never did pit through would take a great deal of evidence to convince me. I have seen a steel tube taken out of a boiler that looked as if it had been shot at with Number 10 bird shot. Every shot went clear through. I have taken steel pipe out of the ground which was hardly corroded at all, as a general proposition, and pitted clear through at places. Now, of course, steel and iron are just the same mechanically; the same conditions that will dissolve one will dissolve the other, but I do not place such a small valuation on the armor of cinders that Mr. Speller does. A scale of cinder meets another scale at a solid place and does not go through. At any rate, gentlemen, to conclude, I have standing to-day a house that was built of corrugated iron twenty years ago, and it has been kept painted in just the ordinary way, and is in good condition. During that time I have renewed four times the corrugated steel covering on other houses. I am not prepared to say that the conditions were quite as good in one case as they were in the other. I should like to hear further from Mr. Speller as to whether he thinks that indicates that the armor of cinder is a good protection. Is it likely to happen that the openings or holes in that armor would register with each other so precisely that the rust that goes through in one place would find a hole ready to go straight through the pipe? My experience is that the wrought iron rusts on the outside, just as steel does, probably a little worse, but it does not go through.

Mr. Speller: Taking up Mr. McDonald's remarks first regarding cinder, we have got to consider pipe materials by themselves. You cannot compare wrought iron in pipe with

wrought iron in machines, on account of the fact that in working the material the plate is rolled in two directions, and the cinder which was originally present in the globules, is rolled out into layers, or scales, as Mr. McDonald put it. In the case of making skelt for pipe, the bloom of iron carrying one or two cinders in small globules is brought out, and these globules of liquid cinder are elongated into strips. Take any cross section of an iron pipe and examine it under a magnifying glass, and you will see exactly how the cinder lies. In any cross section there is no difficulty whatever to find loopholes. You can see that as the cinder in the first place is not uniformly distributed, and as it is not there as scales, but as strings, it offers very little protection. There is nothing in that theory, whatever. Our investigation of this matter has been made, both in the laboratory and the field, and covers the last four years at least.

I might mention one incident that I ran across the other day. We were down at a meeting in Richmond, Va., attending a discussion, and afterwards the superintendent of motive power, of one of the large roads, got to talking to me about his troubles, and as I was coming here the next day I dropped in to see him. He made the statement that they had used iron and steel on that system for years, and they had never known of any wrought iron that had pitted through, whereas they had plenty of examples of steel that had been perforated. We went in the yard and he showed me a pile of tubes there that had been in use about a year, and they were utterly destroyed by pitting. I suggested to him that he use the welded steel tube on account of the fact that the bloom or steel was put through a process of heating and working that brings out the very best in the metal. We took some samples of these tubes at my suggestion. The first one we took proved to be charcoal iron. That was the first instance he had seen of charcoal iron having pitted on that system. The fact of the matter is they had never taken the trouble to investigate the samples that they had based their opinion on, and that is the case in a large number of instances all over the country. I have mentioned one or two instances in this paper of the way we have been mislead by taking

somebody else's work, or not investigating thoroughly. In this very room, last January, we had Mr. Thompson's paper on the durability of threads, and a prominent engineer got up and produced two nipples that had been in a heating system. They were badly pitted after about eight months service, and he asserted that they were steel because of the peculiar shape of the pit. On account of the experience that I had had in this matter, I suggested, before this went on record, that as he did not have any positive proof that these were steel, an analysis be made, and it just happened that both pieces proved to be wrought iron. That may have been just a lucky coincidence, but it seems significant.

As to the matter of cost, steel has been generally cheaper than iron. I do not understand how anybody has paid more for steel than for iron. The fact that steel is made in large quantities, makes it possible to reduce the cost. We feel that we can safely rest our reputation on the steel pipe made to-day. We do not claim that the steel made ten years ago was as good as the iron; in fact some of the evidence indicates that it was not. It was more irregular, it had a greater tendency to pit, which would correspond with Mr. McDonald's experience; but with the steel made to-day, understanding the matter better as we do, I do not think there is any doubt that, under the same conditions, steel is just as good as the iron, to say the least.

REPORT OF PROCEEDINGS OF INTERNATIONAL COMMITTEE FOR STANDARDIZATION OF THREADS, FOR GAS APPLIANCES.

THE PRESIDENT: At the request of the Chairman of the Technical Committee, the report to be made by Mr. Glasgow on the question of standardization of pipe threads, will be moved forward, and we will now hear it.

MR. GLASGOW: Mr. President and Gentlemen: I will take advantage of this opportunity to make a statement on behalf of the committee to whom the Presidential address has been referred.

After careful consideration, this committee has decided that it will submit no formal report. On the contrary, we venture to suggest that it would be well to break the precedent hitherto followed, and hereafter accept the Presidential address as a privileged instrument, not requiring formal action on the part of the Institute.

Referring now to the question of standard pipe threads:

Some time last year the president of the French society invited delegates from gas institutions throughout the civilized world, to send representatives to Paris, who would form a convention to consider the standardization of threads for gas appliances. I was appointed as delegate, and as I know by various experiences the uselessness of a person without a full command of the various languages represented undertaking such work, I in turn, to save trouble, appointed Mr. Vander Willigen to represent me as a delegate. Mr. Vander Willigen speaking Dutch, English, French and German, with equal fluency.

Through our intervention, and upon their request, the American Society of Mechanical Engineers also appointed one of their distinguished members in Paris, Mr. Benet, managing director of the famous Hotchkiss Company, to represent them. Messrs. Vander Willigen and Benet co-operated completely throughout the convention, and were able to accomplish a great deal in our interest; that is to say, toward getting our established American standards proposed as the international standards.

One of the reasons they were able to meet with such success was the great interest that Mr. Gartley, as Chairman of the Technical Committee, took in the matter. He posted us very fully with all possible information relating to the American standards; and not only that, but got up a very perfect exhibit of our threads, that is to say, ends of pipes and fittings which were sent over, most of them mounted on a board and removable, and presented to the French Institute. This exhibit arrived in very good time in France, two weeks before the meeting, but for some inexplicable reason was allowed to lie at the Custom House at the port, and was only got into Paris

after Mr. Vander Willigen arrived. So it was only the last day of the meeting that it was available, but I am told it fairly bewitched the continental people, all of whom examined with the greatest interest and care this exhibit of ours.

Now I will just read a line or two which will crystalize the matter. You will see this at the end of my report, a few pages enclosing the result of Mr. Vander Willigen's work, and so on. You will see that the committee have recommended the adoption of the Systeme Americaine Sellers, whereas the American system for pipe threads is the Briggs system, in which the thread is only slightly rounded at the top and bottom, instead of being truncated one-eighth of its theoretical depth at both the top and bottom, as in our American Sellers' system for bolts and machine screws. This, however, is a matter that can no doubt be satisfactorily dealt with at future meetings of the conference.

I don't know just how they came to slip into that mistake, but I fancy the conference disbanded somewhat hastily. The Secretary was to prepare formal resolutions, and he may have got it wrong in these resolutions. At any rate they have recommended the Sellers' system as the American system for pipes, whereas this is our system for bolts, nuts, machine screws and so on, but we will straighten that out.

On the whole the recommendations show a great victory for American practice, and one readily understands the sound reason for this who has had experience with the cheap, rapid and perfect fitting effected by the use of the American taper thread, in comparison with the cumbersome methods now generally employed in Europe.

The only feature requiring any concession upon our part in order that American manufacture may conform for all practical purposes to the recommended international standard, is the change in pitch in pipes from 1 inch to 2 inches, inclusive. Our present Briggs standard is 11½ threads per inch, whereas the standard recommended by the international committee is 11 threads per inch.

As Mr. Benet, the delegate of the American Society of Mechanical Engineers strikingly says—I have his report which he

kindly gave me to include with mine—neither he nor Mr. Vander Willigen were able to produce any intelligent argument in favor of the fractional thread, and the attitude of the other members of the committee made its adoption impossible. Mr. Benet strongly recommends that the whole influence of the American Society of Mechanical Engineers be directed towards securing the change to 11 threads in the American pitch. Likewise, in my opinion, it is highly important that the American Gas Institute should use its best efforts to secure this change from 11½ threads to 11 threads in the standard pitch for pipes from 1 inch to 2 inches in diameter inclusive, so that our country may profit to the fullest extent by the proposed international standard.

I think that is all I need read. You will now hear the resolution which has been prepared by the Technical Committee, and I believe in turn has been adopted by the Board of Directors.

The President: Before that is read I should like to ask if Mr. Rice, the Secretary of the Mechanical Engineers, is present, and would care to say anything on this subject. If so, I am quite sure, without putting it to the vote of the Institute, that we should be glad to hear him.

Is Mr. Stanley B. Flagg, of the Society of Mechanical Engineers present and desirous of saying anything on the same conditions? Mr. Flagg has taken part in this discussion on behalf of the American Society of Mechanical Engineers

Is Mr. Baldwin present, of the same society, and connected in the same manner with this discussion?

We will hear the resolution.

Mr. Luqueer then read the following resolution:

REPORT OF DELEGATE TO THE INTERNATIONAL CONFERENCE ON SCREW THREADS.

1. Whereas the American Standard Pipe Thread is the Briggs "V" Thread, which insures the maximum tightness of joint by utilizing practically the full theoretical depth of

the thread, the bottom being filleted and the top rounded only enough to strengthen the pipe sufficiently at the groove and preserve the true contour of the apex, and

WHEREAS the American Standard Screw Thread for Bolts and Nuts is the Sellers thread, which is truncated to one-quarter of its theoretical depth in order to secure greater strength, but which consequently does not attain the tightness of joint that is essential in pipe work; Therefore,

The American Gas Institute urges the adoption of the American Standard Pipe Thread, and not the American Standard Screw Thread, for an International Pipe Thread. In other words, this Institute urges the universal adoption for Pipe Work of the Briggs "V" Thread, and not the Sellers Truncated Thread.

2. WHEREAS a change of one-half of a millimetre in the outside diameters provisionally recommended by the International Committee for the following four sizes of pipe will make the entire list practically coincide with American Standard Diameters, and with the diameters (except 2½ inches) adopted by the British Engineering Standards' Committee; Therefore,

The American Gas Institute recommends that the suggested sizes of 11 mm., 13 mm., 21 mm. and 33 mm., be changed to 10.5 mm., 13.5 mm., 21.5 mm. and 35.5 mm., respectively; also that the pitch for 10.5 mm. diameter be 1 mm. instead of 1.40 mm.

3. Subject to the above qualifications, the American Gas Institute endorses the proposed International System of Pipe Threads, and will use its best efforts to secure its adoption throughout the United States.

Also that the committee consisting of Mr. A. G. Glasgow and Mr. Vander Willigen continue to represent the Institute at the International conferences on Screw Threads.

THE PRESIDENT: You have heard the recommendation of the Directors. What is your pleasure?

MR. A. E. FORSTALL: I move that it be adopted.

The motion was seconded, and carried.

REPORT OF COMMITTEE ON PIPE STANDARDS.

THE PRESIDENT: Mr. A. S. Miller, are you ready to report on Pipe Standards?

MR. A. S. MILLER: Mr. President and Gentlemen: During the year the time has been spent in studying the designs of 1898 and 1905, and making up a drawing, or a set of drawings, as a basis for discussion by the members of the committee, using the lightest castings in each set. These drawings, in connection with the criticism of the individual members of the committee, have been printed and have been sent to the members of the Institute.

There will be a meeting of the committee this week, also other meetings later. I hope that the inndividual members of the Intute who are interested in this standard will examine it carefully and write to the chairman of the committee which will take up this work during the coming year, stating their criticisms and objections, as this subject is a very important one and should be settled for all time during the coming fiscal year of the Institute.

THE PRESIDENT: Let me ask you, Mr. Miller; you say you are going to meet here during this week. Is it your intention to hold such a meeting as the other gentlemen are holding upstairs?

MR. MILLER: No.

THE PRESIDENT: And invite people to appear before you?

MR. MILLER: No. The subject is one that we do not think could be discussed offhand in that manner. We think that the discussions and criticisms should be reduced to writing and then considered. This committee, after getting together, will meet committees of the founders and take up the practical question of castings as well as the questions of the designs from the gas companies' point of view.

THE PRESIDENT: The Secretary will read the resolution prepared by the Directors in connection with this matter.

Mr. Luqueer then read the following resolution:

"The report of the sub-Committee on Pipe Standards as submitted, being a report of progress, the Technical Committee recommends to the new Technical Committee that the work be continued."

MR. GLASGOW: I move the adoption of the recommendation.

The motion was seconded, and carried.

THE PRESIDENT: I sincerely hope the members will take the matter up earnestly and communicate with the chairman of this committee.

(The Report of Progress of Committee on Pipe Standards will be found in the Appendix.)

REPORT OF COMMITTEE ON ELECTROLYSIS.

THE PRESIDENT: We will hear the report now of Mr. A. G. Glasgow, Chairman of the Committee on Electrolysis.

MR. GLASGOW: The report will be a very brief one, as the committee is not in a position to make a report at this meeting that would be of any value to the Institute. We have certain lines which promise useful results, definite results perhaps, but I should like to make clear that these lines can be with the greatest ease grasped by the hands of any other committee. If anyone feels disposed to relieve us, the lines that are out will fall into their hands very gracefully.

THE PRESIDENT: There is a resolution presented on this subject by the Board. The Secretary will read the recommendation.

Mr. Luqueer then read the following: "The Technical Committee recommends that the work on Electrolysis be continued."

THE PRESIDENT: It seems to me that Mr. Glasgow, with all due respect, has not done himself or his committee justice. They have done a very important work this year, but it does not seem to that committee that this is the proper time to bring out the information that is developed. They want to

put it in more definite shape, but to my mind, the results obtained in that direction are most profitable—promise to be, at least.

REPORT OF COMMITTEE ON PLACE OF NEXT MEETING.

THE PRESIDENT: I have a report before we adjourn from the Committee on the Place of Meeting: "Your committee appointed to select the place of next meeting unanimously report in favor of Detroit, Mich. Signed, J. T. Lynn, Alten S. Miller and W. A. Baehr." (Applause.)

That is the recommendation; what do you do with it, gentlemen?

MR. MCDONALD, of Louisville, Ky.: I move that it be concurred in.

THE PRESIDENT: In other words, that we adopt that place for the next meeting.

MR. GLASGOW: I second the motion.

THE PRESIDENT: All in favor of adopting the report of the committee on making the place of next meeting Detroit, will please say, aye. Contrary, no. It is carried.

We stand adjourned until next morning, and I hope we can get to work promptly at 10 o'clock.

SECOND DAY.—MORNING SESSION.

The Institute was called to order by the President at 10 o'clock.

THE PRESIDENT: I will ask Mr. Brown to read the report of the Committee on Calorimetry.

REPORT OF COMMITTEE ON CALORIMETRY.

SYNOPSIS OF REPORT.

CHAPTER I.—GAS CALORIMETRY:

1. Practice in America and Europe.
2. Reasons for Increasing Demand for Calorimetry.
3. Principles of Gas Calorimetry.
4. English Units.
5. Calorific Value Calculated from Analyses.
6. Commercial Calorimetry.
7. Factors upon which Accuracy Depends.

CHAPTER II.—CALORIFIC VALUE AS RELATED TO HEAT UTILIZATION:

CHAPTER III.—CALORIMETERS:

1. Calorimeters—General.
2. Junkers—Extensive Use.
3. Boys—Adopted by London Referees.
4. Simmance-Abady—England.
5. Sargent—United States.
6. Other Calorimeters.

CHAPTER IV.—TESTS.

1. Tests made by Committee.
2. Identity of Investigators.
3. Purpose of Tests.
4. Calorimeters Tested.
5. Calibration of Instruments.
6. Tests and Comments.
7. Efficiencies.

CHAPTER V.—SPECIFICATIONS AND RECOMMENDATIONS:

1. Meter.
2. Regulator.
3. Calorimeter Proper.
4. Burner.
5. Thermometers.
6. Barometer.
7. Water Supply and Measurement.
8. Gas Piping and Tubing.
9. Humidity.
10. Remarks and Criticisms Concerning Specific Instruments, based on Experience During Tests.
11. Selection of Calorimeter.
12. Instructions for Operating Calorimeter.
13. Care of Instruments.
14. Capacity or Intelligence of Operator.
15. Precautions—"Don'ts."
16. Typical Calculation (Example).
17. Use of Computer.
18. Suggestions for Further Investigation.

APPENDIX.

A. Description of Instruments Tested.
B. Notification of the Metropolitan Referees for the Year 1908, as to the Mode of Testing the Calorific Power of the Gas.
C. Dr. Immenkotter on the Junkers Calorimeter.
D. Tables of Test Data.
E. Cuts and Curves.
F. Bibliography and U. S. Patents.

CHAPTER I. GAS CALORIMETRY.

1. Practice in America and Europe:

Ten years ago gas calorimetry in the United States was practically unknown; that is, calorimetry as a general practice in a commercial business, and it has only been recently that a few of the larger gas undertakings have been making the calorific value of the gas a regular test at the works. Probably a half dozen of our larger companies have been making readings systematically or experimentally for some years, but it is only since the state and civic authorities have enacted measures governing the heating value of gas delivered, that the calorimeter has been adopted as an instrument to be used daily in our works, and a systematic record made of the heating value of the gas manufactured.

In Germany the gas calorimeter has been in more general use, as the authorities and companies there have appreciated the importance of the heating quality of the gas.

The English authorities and supplying companies have demanded spasmodically that the gas be of a certain heating value, but readings have not universally been made in England, although the heating value has been recorded for some time by the larger companies.

The candle power of gas supplied in both Germany and England has been generally lower than in the United States, owing to the fact that the greater percentage of the gas manufactured is coal gas. The tendency has been in England during the last four or five years to reduce gradually the illuminating value, as it is known that the heating value is not proportionately lowered; so, while reports of the heating value have not been generally demanded, many of the larger companies have been making and recording calorific readings.

In Germany in some instances the authorities have demanded continuous reports of the calorific value of the gas, and, therefore, readings are systematically made and recorded in many of their cities, occupying an importance equal to, if not exceeding, that of the illuminating value.

2. Reasons for Increasing Demand for Calorimetry:

Reports from many of our companies show that from 80 per cent. to 90 per cent. of the total gas consumed has been used under such conditions, that the measure of its heating value closely approximates its usefulness for the purpose whether used in stoves, ranges or incandescent lighting. This fact has naturally demanded, to a more or less extent, that the heating value of the gas should be given, as well as the illuminating power. We appreciate that in some gases, particularly coal gas, the illuminating value may be reduced without a corresponding reduction in the calorific value, which fact has caused to be embodied in some of our state and civic regulations a demand for the reading of the calorific value.

In industries using producer gas and by-product gases, where the illuminating value of the gas is practically negligible, the sole determination of quality has been the calorific value. The extensive development and use of the gas engine to-day has incited the engine manufacturers to make guarantees upon heating value of the gas, although the constituent gases themselves modify somewhat the serviceability of the gas for engine purposes.

If these various industries are determined to measure the calorific value of the gases, it seems important that the gas industry of the country should undertake to determine and describe systematic methods for general use in determining the calorific value of gases.

If our state and civic authorities are likewise undertaking to measure the calorific value of urban gas by some method, this method should be universally constant, and should be approved by the American Gas Institute.

3. Principles of Gas Calorimetry:

Gas calorimetry may be defined as a process of determining the quantity of heat developed by the complete combustion of a unit volume of gas. The common and most successful method of accomplishing this is through the use of an instrument known as the "Calorimeter," its auxiliary meters, thermometers, regulators, scales and weighing tanks. An ex-

act quantity of gas can be burned under prescribed conditions and the heat developed in the combustion absorbed by a known weight of water passing through the instrument. It is possible, knowing the weight of the water passed through the instrument and the rise in temperature, to calculate the entire quantity of heat absorbed by the water.

This type of instrument is so much the simplest in design and application that your Committee have adhered to it in all their experimental and test work on which this report is based. Other gas calorimeters, designed on different principles intended to measure a part or all the heat developed in the combustion, have been put forward in great variety, but none of them seem to be as easily adapted to our general commercial requirements as those of the water heater type.

4. English Units:

The British Thermal Unit is the quantity of heat required to raise one pound of water at its maximum density one degree Fahrenheit, the maximum density being at a temperature of 39.1 degrees. The amount of heat absorbed by water in being raised one degree at normal operating temperatures, say from 60 degrees to 90 degrees F., is, however, practically the same as when it is at its maximum density, the error being, at 90 degrees F., only .016 per cent., and less at lower temperatures. Therefore, no correction is considered necessary in our operation. The discrepancy would account for a difference of only .096 of a B. T. U. in a 600 B. T. U. gas.

Based on the fact that all gas in this country is sold by the cubic foot, and that the British Thermal Unit has been in general use as expressing the unit of heat; your Committee believe that it is proper to recommend the use of the Fahrenheit thermometer, the cubic foot and the pound, the results being expressed by direct multiplication in British Thermal Units.

If all our members in future in ordering calorimeter outfits will specify cubic foot meters, Fahrenheit theremometers, scales graduated to one-hundredths of a pound, to weigh the heated water passing from the calorimeter, all the incon-

venience of using a mixture of metric and English units, or a reduction of a portion of their data from metric to the English system, will be avoided.

5. Calorific Value Calculated From Analysis:

The calorific value of a gas is often expressed as being calculated from anaylsis. Such an expression may or may not closely approach the value determined by the calorimeter. The analysis of a simple gas containing but few hydrocarbons is easily made, and its heating value easily calculated, but the gas as supplied in our urban distribution is so complex in its character that the determination of its hydrocarbons is a matter of great difficulty, and as these hydrocarbons constitute the important or more compact heating elements, it necessarily makes it difficult to accurately calculate the true heating value.

In the hands of the best and most experienced gas analysts, however, we believe that gas analyses can be made to give comparative results, and the average composition of the illuminants approximately determined. Nevertheless, before the calculated heating value of a gas is accepted, the accuracy of the analysis should be investigated.

6. Commercial Calorimetry:

By employing extraordinary precautions in calibrating the thermometers, weighing the water, in the adjustment of meter, and in obtaining correspondence between the temperature of the water and that of the room, as well as in making corrections for atmospheric temperatures and pressure, it is possible to obtain an accuracy higher than that necessary for commercial purposes.

For ordinary commercial work the same amount of care need not be taken in the determination. The ordinary wet test meter, familiar to all through its use in photometric work, checked and manipulated in the usual way, is sufficiently accurate.

7. Factors Upon Which Accuracy Depends:

The accuracy of operating depends upon several factors. The instrument should be installed in a well ventilated, light room, free from draughts and vibration, and of normal temperature. The gas should be measured at the temperature of the atmosphere, and the exhaust products should leave the calorimeter as nearly as practicable at this same temperature. With the temperature of gas, inlet water, air and exhaust products the same, there will be no reasons for making corrections for the sensible heat absorbed or lost. The temperature of the water should be practically the temperature of the operating room, and should be uniform. With the temperature of the water the same as that of the room, the exhaust products may be made to approach closely to the temperature of the air and gas without difficulty.

In the measurement of water by volume, owing to the large surface exposed and to the irregularities commonly found in the bottom of graduates, it is impossible to read the quantity of water by the eye within a small limit of error. As weighing is not open to these disadvantages, the determination of the quantity by weight largely avoids such errors.

The accuracy of the instrument also depends upon the constancy of operation; that is, the rate of flow of gas should be constant, the heat transmitted should be uniform, and with unvarying temperature of inlet water, there should be no variation in the temperature of outlet water.

CHAPTER II. CALORIFIC VALUE AS RELATED TO HEAT UTILIZATION:

By this we mean the heating value of the gas, as determined by the calorimeter, and the available heat in the gas that is applicable for various uses in the arts. Many misunderstandings have arisen from the use of the words "gross" and "net," as applied to heating values. The "gross" heating value is that value which is obtained by the calorimeter when the gas, air and exhaust products from the calorimeter are at the same

temperature. This condition strikes a thermal balance for the calorimeter, and the heat absorbed by the water passing through the calorimeter is all the heat developed by the combustion of the gas. This result, under normal conditions, is not exact, as the entrained moisture in the air and gas, and the moisture found in the products of combustion, do not balance, but the errors in absorbed heat are slight.

For example, the gas having passed through a wet meter is apt to be saturated. The air may have a saturation of 70 per cent.; while the exhaust products leave the instrument saturated. This means that some of the water vapors formed by combustion complete the saturation of the products leaving the instrument. This error is small, and the Committee are of the opinion that for commercial practice, at least, it may be entirely disregarded, as these errors ordinarily in actual practice would be a small fraction of 1 per cent. Hence, the calorific value as determined by the calorimeter is the "gross" or true heating value developed by the combustion of the gas. The "net" heating value, so called, is the "gross" heating value, less the latent and sensible heat of the water vapors condensed in the calorimeter. Where there is a large percentage of free or combined hydrogen this condensation is greater, and in certain gases the difference between "gross" and "net" may be as high as 10 per cent. In other commercial gases it may be as low as from three to five per cent. But this latent heat is not completely lost unless the products of combustion leave the apparatus at such a temperature that the moisture formed during combustion will be carried off as vapor. Under ordinary conditions this might be 130 to 150 degrees, while under some conditions it would be much higher.

Now, if the latent heat and sensible heat of the condensed water from the products of combustion are deducted there is just as much reason for deducting the sensible heat of the uncondensed portion of the products of combustion, since it is necessarily lost at the same time; and if the temperature of the exhaust products leaving the appliance is very high, this sensible heat may be several times that deducted in obtaining the so-called "net" value. In other words, there would

be a different true "net" value for each change in conditions of the utilization of the gas, and none of them determinable by direct test by a calorimeter or any other known instrument. Therefore, the Committee are of the opinion that the heating value of a gas should be expressed only in that which is determinable as the "gross" or total heating value, the value of the gas as given by the calorimeter.

This use of the total heating value of the gas has been objected to seriously by the manufacturers of some appliances, notably of gas engines, as they claim that it is impossible for them to utilize the latent heat of the products of combustion. Their engines exhaust at such high tempeartures that the latent heat is never available, and in making guarantees they are inserting clauses whereby the "gross" value, less the latent heat, is considered as the heating value of the gas. If such a condition is to be met, it is only fair, too, that some method should be adopted whereby the "gross" heating value alone is expressed and the available heat for the given purpose is figured in some other way.

Gas has become a competitive fuel in many of our industries. All other fuels are rated by their total heating value. Why not gas?

The argument for a correction is based on the claim that all of the heat developed cannot be utilized, but that varies widely with the appliance. With some appliances a great loss is experienced through sensible heat of waste products and latent heat of water vapors. With other appliances this loss is reduced to very small magnitude and water heaters, or similar types of appliances can be made, as in the calorimeter itself, to utilize it all. In what an absurd position we would find ourselves if, advocating the use of "net" values, we tried to figure the efficiency of such an appliance.

CHAPER III. CALORIMETERS.

1. Calorimeters—General:

The only calorimeters considered by your Committee were of the Junkers or water heater type, measuring the gas and determining the calorific power by transferring the heat de-

veloped to a known quantity of water, and determining the rise in temperature of this water.

This we think is the only practical type of commercial calorimeter on the market, and at this writing your Committee disapproves of the adoption for commercial practice of any instrument which determines the heating value by raising the temperature of metals, or that records the heating value by measuring the density of liquids, or by which the heating value is deduced from the quantity of air required for combustion.

We also disapprove of the use of calorimeters which do not measure the total heating value of the gas. There have been designed calorimeters that allow the products of combustion to leave at temperatures such that the water vapors formed in the products of combustion will not be condensed in the instrument. This method of operating a calorimeter allows for many chances of error, and it does not provide for measuring the sensible heat that is lost in these products of combustion, and also increases the error occasioned by the presence of moisture in the atmosphere.

2. Junkers:

The Junkers gas calorimeter, designed by Hugo Junkers, of Germany, is probably the best known available instrument. It has been extensively used in the gas works of Germany and England, and to-day is used in the United States by the gas industry, and by users of producer and blast furnace gas. Gas engine manufacturers have depended almost entirely on this instrument for observations to check the guarantees of their engine economies. It was probably the first and most accurate calorimeter to be put into general service, and deserves entirely the credit it has received.

An improvement may be made in this instrument by having the water inlet and outlet on the same level and adjacent, so that the thermometers may be more conveniently observed. The construction of the meter is such that it is impossible to adjust the water level. The entire equipment, to conform

to American practice, may be made more convenient if arranged with English units of measurement.

The capacity of the Junkers calorimeter is such that it may be used for testing either low or high heating value gas.

3. Boys:

The Boys Calorimeter, designed by C. V. Boys, of London, is an instrument which has been adopted by the London Referees for determining the heating value of London gas. This instrument is of limited capacity, and, while it may be made to give very accurate readings with some gases, under certain conditions, it is exceedingly inconvenient in operation. Its construction necessitates taking the calorimeter apart to light or extinguish the burner. The flame adopted is of the illuminating style, and under certain conditions, with rich gas, is apt to smoke and deposit carbon on the interior of the calorimeter.

4. Simmance-Abady:

The Simmance-Abady Calorimeter is an English instrument, and is little known in the United States. This instrument is mounted on a platform, which makes its use as a portable instrument inconvenient. There were several difficulties encountered in its manipulation that appeared like defects in the design of the instrument. The outlet water temperature was very difficult to control, and led us to believe that the average reading of the outlet thermometer did not record the average temperature of the outflowing water. This was partly caused, we believe, by the trapping of air around the outlet thermometer and partly by the low rate of water flow, due to the small gas capacity of the burner.

Great care must be taken in starting this instrument to prevent this forming of an air pocket, which is due to the siphoning off of some of the water from the top of the instrument by the curved overflow pipe. The operating directions of this instrument also indicated that fractional revolutions of the drum of the meter should be taken in making observations.

The instrument was not provided with a water outlet of constant head. The calorimeter was jacketed with wood, which was found by the Committee to be unsuitable and not as satisfactory for accurate work as a polished metal jacket.

5. Sargent:

The Sargent was the only American Calorimeter examined by the Committee. The first instrument tested was found faulty in design and gave irregular readings. A second instrument was submitted by the makers, which gave better comparative readings with the other calorimeters.

This calorimeter embodies arrangements intended to assist in making rapid and accurate observations. The principal point of difference in the Sargent Calorimeter is in the adoption of the English units entirely, and of weighing the water instead of measuring it in glass graduates. The instrument is further provided with an automatic electric device that changes the water supply from one measuring vessel to another at fixed revolutions of the meter.

6. Other Calorimeters:

No other calorimeters than the above were examined by your Committee, but the various designs as illustrated in our engineering publications were studied carefully, and as they did not embody the simple principles of the water heater type of calorimeter, it was not thought desirable, owing to the limited time for our work, to make an investigation of these instruments.

CHAPTER IV. TESTS.

1. Tests Made by Committee:

The tests made by your Committee consisted of readings at Philadelphia, further readings at the laboratories of the Milwaukee Gas Light Company, and finally of an extended series of readings in the laboratories of the University of Wisconsin, at which special equipment was provided for the purposes of this investigation.

The calorimeters were erected and operated according to the instructions of their makers, so far as practicable. Changes

from the prescribed methods of operation were only made when it became evident that such changes would lead to better results with the given instrument.

They were then operated to determine the capacity of each calorimeter for the absorption of heat. They were further checked to determine the effect of varying quantities of water being raised to different temperatures. They were then checked to see what effect varying the quantity of air supplied to the burner of the calorimeter would have. Further tests were made to determine the actual efficiencies and the rate of combustion at which the maximum efficiency occurred.

2. The Identity of the Investigators:

In the investigations of this subject made by your Committee, they were assisted to a great extent by the work and observations made by Messrs. C. O. Bond, Chief Photometrist, Philadelphia Gas Works, at Philadelphia, by A. C. Wilke, Chemist, Milwaukee Gas Light Company, at Milwaukee, and by O. L. Kowalke, Instructor in Department of Chemical Engineering, U. of W., R. C. Cornish, Asst. Engineer of the Milwaukee Gas Light Company, and D. A. Powell, Cadet Engineer with the Madison Gas and Electric Company. These latter men devoted an entire month at the University of Wisconsin to the calibration and checking of all instruments used and to the actual tests.

3. Purpose:

The purpose of the investigation was to secure information on which to base recommendations to the American Gas Institute as to calorimeters for general commercial practice; also, to determine the accuracy and efficiency of calorimeters in common use, and to formulate and prescribe rules and methods of operating.

4. Calorimeters Tested:

1. Standard Junkers Calorimeter, with pressure regulator, belonging to Chemical Engineering Department of the University of Wisconsin.

2. Junkers Calorimeter, modified so that the inlet and outlet thermometers are at the same height. This instrument

has been in daily use for about one year and is the property of the Milwaukee Gas Light Company.

3. New Sargent Calorimeter, using wet pressure regulator from a Junkers outfit and not using the electrical dumping device.

4. Standard Boys Calorimeter with wet pressure regulator from a Junkers outfit.

5. Standard Simmance-Abady Calorimeter.

A few preliminary tests were made at the West Side Works of the Milwaukee Gas Light Company, but it was impossible to maintain uniform conditions for more than one calorimeter at a time, on account of small sampling holder and limited water supply. Accordingly, all apparatus was sent to the Chemical Engineering Building, at Madison, Wis., where it was possible to maintain a constant water and gas supply for a series of tests.

5. Calibration of Instruments:

Before making any tests all thermometers and meters were carefully calibrated. Two standard thermometers were used, one, No. 4,180, belonging to the Chemistry Department of the University of Wisconsin, certified August 9, 1902, and No. 2,620, from the Physics Department of the University of Wisconsin, certified by U. S. Bureau of Standards January 14, 1908. No. 4,180 has a range from 0 to 100 degrees C., reading 1/10 of a degree, and No. 2,620 has same range, reading to 2/10 of a degree. These two thermometers were carefully compared through range from 10 to 50 degrees, using a micrometer telescope to read the latter, and an ordinary reading glass, the former. It was found that they did not agree, so the ice point was determined and No. 2,620 was found correct and No. 4,180 was .08 degree high. After making this correction, scale readings were found to agree. As No. 4,180 was more easily read it was used to calibrate the calorimeter thermometers, making the correction for 0 point.

Each calibration was made as follows: The standard and two thermometers to be calibrated were suspended side by side in a bucket of water, which was surrounded on the out-

side with excelsior to prevent radiation. The water was agitated by means of a stirrer operated by a motor. Bulbs of thermometers were immersed to the depth they would be used on calorimeters and correction was made for length of stem exposed. A piece of plate glass was set up in front of thermometers to prevent the observer's breath striking them.

In this way curves were obtained for six of Sargent Steam Meter Company thermometers and two Centigrade thermometers furnished with the M. G. L. Co. Junkers instrument. A copy of one of these correction curves is shown in appendix.

In order to facilitate our calculations, four meters reading to 1/10 of a cubic foot per revolution were selected. Three of these meters were made by the Sargent Steam Meter Company, and the fourth was an American Meter Company meter, No. 458.

These four meters were calibrated at the rate of flow at which they were later used, with a ¼ cubic foot bottle, making five complete revolutions of the meter by filling the bottle twice. The calibration of the bottle was carefully checked to deliver ¼ cubic foot of distilled water at 62 degrees Fahrenheit.

All meters were adjusted to within .05 of one per cent. After the correct water level was obtained a strip of paper was pasted around the gauge glass to show proper level. Gas was taken from a five-foot prover and a constant pressure of 14/10 on inlet of meter maintained. Water for meters and bottle had been previously saturated with gas.

6. Tests and Comments:

Water for tests was obtained from a large tank, located above the level of the table on which the instruments were set up. A constant level was maintained in the tank by using a float valve, thereby maintaining a uniform head on the apparatus and supplying water of constant temperature.

Gas tested was run from the city gas mains into two holders, each having capacity of about 60 cubic feet. These holders were located in the basement of the Chemical Engineering Building, and were connected in parallel, so that they could

be filled and emptied at the same time. The holders were counterweighted to give 25/10 inches of pressure, and this was reduced to 15/10 by means of a governor. No. 1 holder was built with an annular space for the water, thereby cutting down to a minimum the surface of water exposed to the gas. No. 2 holder was built with an open tank and care was taken to use water thoroughly saturated with gas in filling it. No. 1 holder was provided with a fan to agitate the gas. The gas made by the Madison Gas and Electric Company was entirely carburetted water gas.

All the apparatus was set up on a bench in a room which could be kept free from draughts.

Each calorimeter had its own water and gas connections.

In order to operate the calorimeters under more nearly uniform conditions, some changes were made from the arrangement of apparatus provided by the manufacturers.

All meters registered 1/10 of a cubic foot per revolution. Water was caught in copper tubs and weighed on scales sensitive to ½ gram in 5 kg.

Float pressure regulators of Junkers make were used on three instruments and a similar regulator on the Simmance-Abady. All copper tubs were carefully counterbalanced against a lead weight. This was done with the inside of bucket wet, so that no correction would be required during tests. Tubs were filled with water, emptied and then shaken in an inverted position for about five seconds.

In setting up the instruments, it was our aim to reduce the number of joints where leakage might occur, to a minimum. After apparatus was all connected up, gas pressure was turned on and burner shut off to test for leakage, and no observations made until meter showed no movement.

The humidity was determined by means of a wet and dry bulb thermometer, upon which a constant current of air was impinged by a small motor driven fan.

All tests were run in series, and tests of the same series number on different instruments were run at very nearly the same time. A new series was started with each new sample of gas, at the same time being indicated by a new letter.

All tests were recorded on special blanks which were printed for this investigation, and which is shown in the typical calculation.

The series of tests as made extended consecutively from A to N.

Series A to F, inclusive, were made with an idea of becoming more familiar with the operation of the several calorimeters, and to find out the effect of varying the gas, water and air supply.

Series G and H were made to determine the most efficient rate of combustion of gas in the several calorimeters, maintaining a constant water supply. With the gas used for these tests it was found that for the Boys Calorimeter a rate of combustion from 3½ to 4½ cu. ft. per hour was the most advantageous; for the Sargent about 5 feet; for the Simmance-Abady and Junkers calorimeters 5 to 7 feet.

Series I and P were run using these different rates of combustion, and comparative results were obtained. The accompanying diagrams show graphically these determinations In these diagrams the times of making the test are plotted as abscissae and the heating value plotted as ordinates. Throughout the I series there was a gradual decrease in the heating value of the gas with time. This was possibly due to absorption of some of the illuminants, as the water used to fill the No. 2 holder was taken from one of the holders of the Madison Gas Company, and was saturated with coal gas; whereas, at this time the gas made by the Madison Company was water gas. These series of tests show the relative efficiency of the various calorimeters.

Series S gives results of tests on Simmance Abady calorimeter, when a burner of larger capacity was substituted, which allowed an increase in the flow of water to be made, thereby obtaining more uniform readings.

Comparison of results in series P, between the Junkers and the Simmance-Abady instruments, on gas, shows the Simmance-Abady about 10 per cent. above the Junkers.

Similar tests "T" and "U" were made on Simmance-Abady in conjunction with the Sargent, and the same high efficiency

readings of the Simmance-Abady were obtained. We believe, however, that had we been able to increase the heat input from our electric heater to the same degree that was done in series "S" on gas by a change of burners, a small discrepancy in efficiency noted would have resulted.

Owing to the great fluctuations in the outlet temperature, we are not at all certain that we obtained an actual average of the temperature of the water leaving the instrument. However, based on the two series of tests, one with the electric coil heater and the other on gas, both showing better than 100 per cent. efficiency, we concluded that the construction, as shown in this particular Simmance-Abady instrument, which is about five years old, could not be considered satisfactory.

In series J a comparison was made between the U. W. Chem. Engineering Junkers and the Milwaukee Gas Light Company's modified Junkers. Both calorimeters were run at approximately the same rate of gas consumption, and the same rise in temperature of the outlet water and the same amount of water. A subsequent check on meters used for this test showed that the meter used on the Milwaukee Gas Light Company's Junkers was about .4 per cent. fast. Making this correction on the average reading of this series by the Milwaukee Gas Light Company's Junkers, it leaves a difference of but .4 per cent. between the readings of the two instruments.

7. Efficiencies:

The purpose of tests K and L was to determine the efficiency of the absorption of heat in the calorimeter. To determine this efficiency, a known quantity of heat energy was supplied electrically for a known interval of time, and the quantity of heat absorbed was determined in the usual way.

The apparatus for supplying this heat energy consisted of a coil of nickel wire wound on a mica frame. The current from a 120 volt storage battery was passed through this coil and measured by standard electrical instruments. The electrical measuring instruments were of the Weston Laboratory standard type, and had recently been calibrated. The heating coil was made of two pieces of mica, 2 inches wide, 5 inches

long and 3/32-inch thick, set at right angles to each other. This frame was mounted on a brass axis, such that it would fit into the ordinary holder for the Bunsen burner of a Junkers calorimeter. The accompanying photograph will show details of construction of this coil. The current through the circuit was regulated by means of a lamp bank placed in series in the circuit, and the amount of energy put into the coil was regulated to give a rise in temperature equal to that which had been used in the tests with the gas.

In making this test, three operators were employed, one to observe the readings of the voltmeter, the second to observe the readings of the ammeter and the third to operate the calorimeter.

The time for each test extended over three minutes. During this time readings of voltage and current were taken as rapidly as the observer could record them. Likewise, observations of temperature of inlet and outlet water were taken as rapidly as the data could be recorded. The water passed through the calorimeter during the period of test was carefully weighed to within one gram, and all results were expressed in small calories. Series of tests of this kind were made on the U. W. Chemical Engineering Junkers and the Simmance-Abady. The results of Series K show an average efficiency of over 99½ per cent Junkers calorimeter.

Series L was made similarly on the Simmance-Abady. The results of this series show that there is something wrong in this test. The efficiency of the instrument shows about 108 per cent. In looking over the temperatures of the outlet water, an explanation for this apparent discrepancy can be found. In this series of tests the observer recorded the observations of temperature as fast as it was possible to do so, and he also attempted to give the extreme variation of such temperature indications. At no time was the temperature as indicated by the thermometer constant for even a second, but the mercury thread kept moving up and down continually. It would seem that the water as it comes out of the instrument and passes over the dome of the combustion chamber, is unevenly heated and not thoroughly mixed

to a uniform temperature before reaching the thermometer, and thus the thermometer records not a uniform temperature of water, but water which comes in unevenly heated currents.

Series M was a repetition of the tests of Series J. Before making this series of tests, the two meters were again carefully calibrated. Then the M. G. L. Company's Junkers was run against the U. W. Chemical Engineering Junkers. A series of five tests was made with this arrangement. Then another series of five tests was made, running the M. G. L. Company's Junkers against a second Junkers, belonging to the University of Wisconsin. These results show a very close agreement between the three instruments.

CHAPTER V. SPECIFICATIONS AND RECOMMENDATIONS.

Your Committee recommend the adoption of a calorimeter of the water heater type.

In determining the calorific value of the gas, we recommend the adoption of English units; the measuring of the gas in cubic feet; the correction of the volume of the gas to standard volume, as expressed when measured under a standard temperature of 60 degrees Fahrenheit, and standard barometric pressure of 30 inches of mercury.

We recommend taking all temperatures of air, gas and water with Fahrenheit thermometers, and expressing the result in Fahrenheit degrees.

We recommend weighing the water used with balances reading in pounds and hundredths of a pound.

We recommend expressing the result of all calorific determinations of gas in British Thermal Units, or B. T. U.'s, which is the natural product of a pound degree.

As not one of the calorimeter outfits supplied was entirely satisfactory, and as several improvements suggested them-

selves during the experiments, we consider the following specifications and recommendations necessary for the best results:

1. METERS:

For a meter, we recommend one registering 1/10 cubic foot per revolution.

The large dial should be graduated into 100 equal parts, with every 10 parts distinctly marked to facilitate reading. In addition to the large dial, there should be a smaller dial to register the number of revolutions of the large hand. This dial will register 10's, units and 10ths of a cubic foot.

The face of the meter should be enameled, and no glass used on the front, thereby reducing the error due to parallax. The face of the meter should be easily removable, in order to get at the shaft and the stuffing box on the shaft. This stuffing box should be of a size large enough to be easily packed.

The large hand of the meter should be well pointed and not extend to the outer end of graduations of the meter dial. Several of the meters tested had very wide pointers, and these pointers extended beyond the graduations, so that it was difficult to get accurate readings. The meter should have three leveling screws, two in front and one in the center at the back of the meter.

Two level tubes should be securely fastened to the top of the meter, placed at right angles with each other.

The meter should have an outside gauge glass showing the water level. This glass should not be less than 3/8 inch, nor more than 3/4 inch, inside diameter, as it is necessary to have the glass large enough to be readily cleaned, and small enough that the meniscus formed by the water can be accurately read. The opening through gauge bodies to the meter should be unobstructed, and of a size to correspond with the size of the gauge glass. A pointer to show the correct water level, reading to the bottom of the meniscus, should be put on all water level gauge glasses.

For convenience, a standard 3-light meter union should be used on all meters, and hose nipples for 3/8-inch hose should be furnished with the unions.

The meter should be provided with an opening for the addition of water when needed. This can be done by using a pet cock with a small funnel mounted on top, connected to the top gauge glass body.

An opening must be left for a thermometer in or near the gas outlet. This thermometer should be a chemical thermometer in a metal case, reading to one degree Fahrenheit, with a range of from 50 to 100 degrees, and accurate to within ½ degree. Some of the thermometers furnished with the apparatus read to two degrees, and there were variations on three thermometers furnished by one company of 1½ degrees. Another criticism of the same thermometers was that the glass tubing was not round, making the thermometers difficult to read.

An opening with a plug connection should be left on the bottom of the meter to drain it when the meter has to be transferred from one place to another.

In general, we would say that the number of joints liable to cause leakage should be reduced to a minimum. We found that several of the meters which had faced joints were very difficult to keep tight, even by using carefully made gaskets.

2. Regulator:

The pressure of the gas when burning in the calorimeter should be absolutely uniform, to obtain the best results, and any small regulator that will maintain this uniform pressure will be satisfactory. We recommend the use of a small wet governor, as supplied with Junkers Calorimeter, as giving excellent regulation, and which will operate without chattering. Such a regulator should be constructed so as to be readily weighted for altering the pressure.

3. Calorimeter:

The calorimeter should be designed to give a constant head of water on the apparatus. This head can be maintained by having a weir overflow on the inlet at some distance above the top of the calorimeter, and a weir overflow on the outlet. The rate of flow through the apparatus should be regulated

by means of a cock on the inlet water. It was necessary, in case of the Boys Calorimeter, to use a screw cock on the rubber tubing to get variations in the rate of flow. This was not used on this calorimeter, except during very low consumption of gas, as at higher consumption the coil was not large enough to give an amount of water capable of reducing the temperature to the desired range.

A calorimeter should be so built that the water will circulate freely and that there will be equal distribution of water throughout the apparatus. Baffle plates should be so arranged that the water will be thoroughly mixed before coming in contact with the bulb of the outlet thermometer, thereby giving correct readings. The design should be such that air pockets will not form in the water space. It was found in several tests that considerable variations in temperature arose from neglect in this particular.

The calorimeter should be made of bright polished metal, air jacketed in all its parts. We found a reduction in heating value by one of the calorimeters on spilling water over the wooden jacket, due to evaporation of water from the jacket, and since the accidental wetting of the jacket is always liable to occur, we consider that the use of an absorbent jacket a serious defect in design.

There should be a damper in the exhaust gas flue which can be easily adjusted, and which will not be moved by a slight jar.

The calorimeter should be mounted on four legs, with a spread great enough to give a firm base, at a height sufficient to make it easy to put the burner in place.

Thermometers should both be on the same level to facilitate readings. This is a desirable feature of the Sargent, and there is no reason why Junker instruments made in the future should not conform to it. The openings for thermometer corks should be large enough to take a No. 4 rubber stopper.

4. Burners:

The Boys Calorimeter was provided with a burner with an illuminating flame, and while this was found satisfactory for

small gas consumption, it was replaced with a Bunsen flame, which was equally satisfactory under all of the same conditions, and in addition had a wider range for the rate of flow. The burners provided with the other instruments tested were solely of the Bunsen type, which is the type that we recomment for general use.

The burner should be a long tube Bunsen, having a spreader on top, an adjustable air mixer which can be easily reached when burner is in position in the calorimeter. The burner should be provided with a stop-cock to change the regulation. The burner should be attached to the calorimeter in such a way that its position cannot be accidentally shifted, and also so that the condition of the flame may be observed by the operator, either directly or by the means of a reflecting mirror.

5. Thermometers:

Accurate thermometers are the most important accessories to good calorimetry.

In supplying many of the thermometers with calorimeters up to the present time, cost has apparently had a large influence, and some very poor thermometers have been supplied with commercial calorimeters.

Your Committee believe that the thermometers (particularly those for reading water temperatures) are one of the most important adjuncts, and should be of such a quality as to read accurately within 1/10 of a degree Fahrenheit.

The thermometers should be graduated from 60 to 110 degrees Fahrenheit, each degree to be divided into 10ths with short, distinct graduations. The thermometer should be accurately made, so that in ordinary commercial work corrections may be neglected. With each thermometer should be provided a calibration curve, which would enable very accurate results to be obtained whenever it was deemed necessary to make these corrections. Thermometer cases should not be more than ½ inch in diameter and be made of thin glass. This will prevent reflection and parallax in reading. The bore of the thermometer tubing must be carefully made, as it was found that of six (6) thermometers of one make,

compared with a standard thermometer, there was a considerable minus (—) correction in the lower portion of the scale, and a very abrupt plus (+) correction in the upper part of the scale.

Telescopic sights for reading of thermometers should be provided, as much more accurate readings can be obtained in this way.

Where disputes arise as to results, we recommend the certification of thermometers by the United States Bureau of Standards at Washington. They are prepared to do this work promptly and at a reasonable expense.

6. Barometer:

Corrections for variation in barometer readings should be made in measuring the volume of the gas. These readings should either be made by means of a mercury column barometer or by a recently calibrated aneroid barometer. Where it is possible, barometer readings should be checked occasionally with readings of the Government Weather Bureau of the city in which the readings are made. It is possible to get fairly accurate readings where no barometer is available by obtaining from the Weather Bureau the barometer readings for the day, and correcting for variations in elevation.

7. Water Supply and Measurement:

The control of the temperature of the water supply is a very important adjunct to accurate calorimetry, and this temperature should be approximately the temperature of the room or atmosphere in which the observations are being made. Water obtained from an ordinary house piping system is apt to be variable in pressure, and also very variable in temperature, due to the uneven consumption in other parts of the building, and possible exposure of the water main to the extreme temperatures of the ground or atmosphere. This control of temperature and pressure may be readily obtained by providing a permanent water supply tank in the upper part of the room or building that will contain enough water to enable the read-

ings for the day to be made. A flat tank of large horizontal area is preferable to a deep vertical tank. The exposed surface allows the water to come to the temperature of the room more readily, while the shallow depth affects the head less as the water is being used.

Water may be collected and weighed in thin sheet metal containers, holding about 8 pounds of water. This size container will hold all the water required in burning .2 of a cubic foot of ordinary illuminating gas with a range of about 15 degrees in temperature between the inlet and outlet water. The scales, or balance, employed should have a capacity of about ten pounds, should read to 1/100 of a pound, and should be calibrated and certified to as being correct by proper authorities.

8. Gas Piping and Tubing:

The piping for a calorimeter should consist of as much metallic piping as possible, and the lengths of rubber tubing used in conducting the gas should be as short as possible, and when used should be saturated with the benzine vapors and other illuminants. The absorption of the illuminants by the tubing, however, has less effect upon the calorific readings than it has upon the photometric readings.

9. Humidity:

It may be desirable to have the state of the humidity of the atmosphere during the test, in which case percentage readings may be made from wet and dry bulb thermometers. For accurate work these wet and dry bulb thermometers should be arranged so that the average humidity of the room may be obtained. This may be done by having a whirling wet thermometer, or having a constant current of air impinging upon the wet bulb from an electric fan; or, a more perfect instrument in the form of an Assman Psychrometer may be obtained. The percentage of saturation of the gas itself may be obtained by readings made with a gas hygrometer. These humidity readings of the gas and atmosphere are not neces-

sary in commercial calorimetery, but may be found useful if it is desired to make corrections for heat absorbed or evolved in saturating the products of combustion.

10. Remarks and Criticisms Concerning Specific Instruments Based on Experience During Tests:

The Junkers: The design of this instrument is such that it is jacketed by a polished metal surface, containing an air chamber. This has proved by experience to practically prevent radiation. The water circulates but once through the instrument from bottom to top, and opposite in direction, as it should be, to the products of combustion.

The water content is comparatively small, about one and one-half pounds, but large enough for the efficient absorption of all heat through a wide range of gas consumption, and ample to enable gas of greatly varying heating values to be readily measured.

The small fixed weir for maintaining a constant head of water on the calorimeter, and the controlling cock with a quadrant arm for indicating its position, are admirable, and necessary for the best work. The overflow is so arranged that syphoning is impossible. When not in use the instrument is easily drained of its water content.

The location of the thermometers gives accurate readings of the average temperature of both the inlet and outlet water.

One objection to Junkers Calorimeter is that the thermometers are not on the same level, which makes rapid readings awkward and inconvenient.

The instrument as now mounted on three legs is somewhat unstable, and it is rather difficult to insert the lighted burner when the instrument is set up.

The gas meter supplied with the Junkers Calorimeter was open to serious objection. It has an inside fixed overflow, which cannot be adjusted when out of proof, and a meter which cannot be adjusted is certainly unfit for this service.

The interior of the calorimeter allowed for draining the condensate as well as any instrument tested.

The supply of air through the calorimeter could be readily regulated by the damper in the waste products flue, a convenient and necessary arrangement for efficient work.

The workmanship on the entire Junkers Calorimeter was good and commendable.

THE SIMMANCE-ABADY: The Simmance-Abady is mounted on a large, cumbersome stand, and is not convenient as a portable instrument. It is jacketed with wood, which is not considered as serviceable as polished metal. The water content is large, being twelve and one-half pounds, which necessarily takes a longer time to strike a thermal balance, and renders short readings more liable to error.

This is in direct contradiction to the claims for the instrument, which were that the calorimeter could be used for quick readings, the dial of the meter being divided so that fractional revolutions of the drum should be taken. This is another objection, and is in opposition to careful and accurate work.

The circulation of water through the Simmance-Abady Calorimeter does not seem to be such that the heat is absorbed from the waste products of the gas with any uniformity. The water courses up and down through the instrument several times, while the gases go through once. This causes an uneven heating, which is augmented by the construction of the last water pocket above the combustion chamber. This arrangement made the outlet water temperature very difficult to control, and led us to believe the average reading of the outlet thermometer did not record the average temperature of the outflowing water.

The water inlet pressure was designed to be controlled by a water gauge, instead of the usual weir overflow. The outlet was controlled by a three-way cock. The waste from this cock caused a syphoning effect in the calorimeter, and altered the head of water through the instrument.

The shifting device for operating the water in the outlet was not adapted to our use, and it was necessary to remove it and support the overflow from a stand to get a more constant head.

THE BOYS: The Boys Calorimeter was found to be unsatisfactory for American practice, it being too inconvenient to operate and of too limited capacity.

The water content was only about .7 of a pound, which limited the rate of flow of gas capable of being burned, and eliminated the use of this calorimeter for our richer gases.

This calorimeter is quite different in construction from the other types tested. It is in two parts, the lower base and burner being mounted together, while the water coil and envelop are fastened together and easily removable by simply lifting from the base.

The water courses through the calorimeter in double coiled pipe, ending in a baffling compartment over the combustion chamber.

The use of an illuminating flame in the Boys was open to some objections. It would smoke if turned too high, or used with a rich gas, thereby causing a deposit of carbon on the water coils, decreasing the efficiency. A Bunsen burner was substituted by your Committee, which gave more satisfactory results and increased the capacity of the calorimeter. The illuminating flame was selected by the designers because its reflected light could be seen through the opening above the base, showing the operator that it was still lighted. Better facilities should have been provided for this purpose.

There was no way of regulating the supply of air through the calorimeter, either by burner adjustment or dampers. In case any adjustments have to be made on the burner or on the rest of the apparatus, it is necessary to lift off the heavy coil and place it on some sort of a support arranged nearby, as it cannot be moved far without disturbing water connections. If the test were made according to the instructions of the London Referees it would be necessary to lift out the coil and shut off water in order to make more than one run, as the shifting device for throwing the water in the glass graduate is mounted directly on the graduate. While testing we avoided this by supporting this shifting device by means of a clamp, and maintained a constant head on the apparatus by supporting an overflow from another clamp above the shift-

ing device. In this way we were able to make a number of successive tests, and could vary the rate of water and gas supply to the apparatus without lifting off the coil.

In the Boys Calorimeter the inlet and outlet thermometer openings are not large enough to use even a No. 3 rubber stopper, and the connections are so short that a stopper which has been firmly placed in the connection will extend down far enough to throttle the flow of water, or even a thermometer with a large bulb will throttle the flow.

The pressure regulator furnished with the Boys instrument is complicated, and has a large number of joints which are difficult to get tight. We had so much trouble with this regulator that we finally abandoned it and used a regulator from a Junkers instrument.

The meter furnished with the Boys instrument registered 1/12 cubic foot per revolution, and the large dial was divided into 100 equal parts. To facilitate calculations, this meter was not used. The water line on the meter is shown by an outside gauge. The gauge is so large that accurate readings are difficult.

THE SARGENT: The Sargent Calorimeter is wood jacketed, an objection, as stated before. The water content of the first instrument is almost twelve pounds, too large for general purposes, although if the operator has sufficient time at his disposal accurate readings may be made with a calorimeter of this capacity, but slight fluctuations in the quality of the gas are less likely to be caught.

The course of the water, as in the Simmance-Abady, is up and down the calorimeter three times, while the gas products pass through in a single course. We understand this has been improved and a single circulation of water substituted.

The thermometers on this instrument are on the same level, which enables the temperature of both inlet and outlet water to be conveniently read.

The air supply is easily regulated by a damper in exhaust flue.

An ingenious device, enabling the water to be turned on and off the measuring tub, was supplied with this calorimeter. This device is operated electrically by contacts on the gas meter hand.

Arrangement is made for weighing the water with scales indicating pounds and hundredths of a pound.

A diaphragm regulator was mounted on the meter, but owing to leakage through the leather, and a slight chattering, this was not used, but a wet governor substituted.

The Sargent meter is of the wet type, with drum one-tenth of a cubic foot per revolution, the dial being divided into hundredths of a foot. The meter has the outside gauge glass, but the lower part of the glass is obstructed by a screw, which was designed to show the proper height of water. This screw has a large, flat head, which interfered by holding the water down by a capillary action, so that the correct level of the water in the meter was not determinable.

II. Selection of Calorimeter:

The calorimeter selected should be an instrument that is portable, conveniently handled and easily adjusted, and one that will give results that may be transcribed to English units with the least difficulty.

It should have sufficient heating surface to transmit to the water all the heat developed by the combustion of the gas at the desired rate.

The course of the water should be direct through the calorimeter, and oppose the flow of the products of combustion. This will tend to prevent any irregular heating of the water column, and should give uniform temperatures passing the outlet thermometer.

The exterior surface of the calorimeter should be of such a nature that the radiation from it and the adherence of dust and fumes to it shall be a minimum. Preferably a polished metal exterior.

The inlet and outlet thermometers should be located at about the same level, and close together.

The water connections to the calorimeter, especially at the points of location of the thermometers, should be so arranged and constructed that there is no possibility of heat being transferred or conducted from the outlet water to the inlet water, and thus affect the true temperature readings.

The auxiliary apparatus should follow in general the recommendations and suggestions made in the earlier paragraphs of this chapter.

12. Instructions for Operating a Calorimeter:

The calorimeter should be set up in a quiet, light and well ventilated room, which is free from draughts and in which the temperature can be maintained constant between 60 and 80 degrees Fahrenheit. The room should be provided with a bench and sink and with a good supply of running water. It is advisable to have a large shallow open tank suspended from the ceiling, from which the water supply can be taken. This tank should be large enough to supply the calorimeter for a series of a dozen or more tests. By having the tank shallow the water is brought more quickly to the temperature of the room. In order to take care of the difference in head as the tank is emptied, it is advisable to have a weir overflow on the outlet. If only a single test is desired, gas may be taken from the house piping, but if average value is required a small holder, or averaging tank, should be set up, and the gas flowing into holder adjusted to just fill it in the time during which the sample is to be taken. Care should be taken to have the service, from which this holder is filled, short and of small piping, in order that average sample may be obtained, or that the sample be taken from a line on which there is considerable consumption.

On unpacking the apparatus, see that it is clean and free of packing material.

Set up the calorimeter so that the overflow and outlet water can be easily led to the sink. Make water connections with rubber tubing, being careful not to cramp the tubing. To avoid air currents, caused by the movement of the observer's body, set up the calorimeter so that the water supply may be

easily adjusted and that all temperatures may be readily observed. Lead the outlet water to a funnel a little above the top of the copper container used in collecting the water, so that the water can be shifted from the funnel to the container without spilling.

Set up meter facing the observer and level it carefully. Fill it with water slightly above the level mark on gauge glass. Connect inlet of meter to gas supply with rubber tubing.

Fill pressure regulator with water, then connect it with outlet of meter, and from outlet of pressure regulator to calorimeter burner. All rubber tubing used to connect meter, pressure regulator and burner should be as short as possible. Note: When fresh water or new gas tubing is used for the first time, gas should be passed through meter and all gas connections for one or two hours before test is made. This is necessary to insure saturation of water and tubing with gas.

Turn on gas and allow it to burn for 5 or 10 minutes. Shut off gas at burner and watch hand on meter for leakage. Be sure that all leaks are stopped before attempting to make a test. Shut off gas, remove pressure and draw off water from the meter until it is exactly at the point shown by gauge. Start water running through the calorimeter, light burner and insert it in the calorimeter. Then regulate the burner to burn at the rate of 4 to 7 feet an hour, as may be found by experiment to give the highest result with the gas to be tested, admitting enough air so that the flame shows a faint luminous tip.

Water should be regulated so that there is a difference between the inlet and outlet temperatures of about 15 degrees Fahrenheit. The temperature of the inlet water should vary but little, if an overhead tank is used and no water added during the test.

Before making the test the barometer, temperature of the gas at the meter, temperature of room and temperature of waste gas should be recorded. It is desirable to have the temperature of the inlet water and temperature of waste gases as nearly as possible at room temperature, in order to establish more nearly a thermal balance.

Next allow gas to burn in the calorimeter for a period of from 20 to 30 minutes. The test may now be started by shifting the outlet water from the funnel to the container just as the large hand on the meter passes the zero point. Readings are then made of inlet and outlet thermometers, making the readings as rapidly as the observer is able to record them during the consumption of 2/10 of a cubic foot of gas. At least ten readings should be made. Water is again shifted from the container to funnel as the hand passes the zero point the second time. Water is then weighed. The uncorrected heating value per cubic foot is obtained by multiplying the difference of the averages of inlet and outlet temperatures, by the number of pounds of water and dividing by 2/10ths. This quantity is divided by the correction factor for barometer and temperature, obtainable from tables, to give the heating value at 30 inches pressure and 60 degrees Fahrenheit. The weight of container should be obtained while the inside is wet. This may be done by filling it with water, emptying and shaking for about five seconds in an inverted position. This will do away with any correction where several consecutive tests are required with same container.

13. Care of Instruments:

The calorimeter, being a delicate and sensitive instrument, should be very carefully cared for when not in use. If the instrument is set up permanently, provision should be made that it be not disturbed by anybody except the operator. If the instrument is not erected permanently, when dismantled it should be carefully cleaned inside and out and the thermometers removed and carefully packed in cotton.

It seems hardly necessary that instruction should be given for the care of such an instrument, but certain precautions should be noted.

14. Capacity or Intelligence of Operator:

Any chemist or young man capable of making close observations of thermometers and meter readings, and having experience and patience necessary with the simpler laboratory

operations, should be a successful operator for commercial observations.

15. Precautions—"Don'ts":

Don't place lighted burner in calorimeter when water is not running through it.

Don't shut off water while gas is burning, and if water is accidentally shut off, shut off the gas quickly, to avoid breaking thermometers.

Don't move suddenly near instrument during test. Slight draughts thus caused will vary outlet readings and vitiate test.

Don't forget to test meter and all connections frequently for leakages.

Don't make the test with inlet water very much below temperature of room.

Don't erect the calorimeter too close to any heating or lighting appliance, where radiant heat might affect the readings.

16. Typical Calculation (Example):

Test Record Milwaukee Junker Calorimeter No. J-1

Date July 9, 1908 3 P.M.

Barometer 29.26 Temp. of Gas 72.68

Correction Factor 0.9423

Humidity 66%

Room Temp. 72.6 Exhaust Temp. 75.2

Condensed Water Collected per cu. ft. Gas.

Time one Rev. Meter 52 sec. = 6.92 cu. ft. per Hr.

Gas Consumed During Test 0.2 cu. ft.

Weight Water Heated 7.5728 lbs.

Temperatures

	Ther. No. U.W Inlet IIII	Ther. No. U.W. Outlet III
1	72.91	88 03
2	72.91	88.00
3	72 91	88.00
4	72 91	87 97
5	72.91	88.00
6	72 91	88.00
7	72 91	88.01
8	72 91	87.97
9	72 91	87.97
10	72.91	88.00
Av.	72 91	87.995
Cor.	− 0.174	+ 0.100
	72.736	88.095

15.359
7.5728
122872
30718
107513
76795
107513
0.2 | 116.310 6352
0.9423 | 581.553176 | 617.16
56538
16173
9423
67501
65961
15407
9423
5984

Rise in Temp. 15.359

B. T. U. 617.16

Remarks R.C.C. Observe

17. Use of Computer:

The labor of making the calculations for determining the heating value from observations of a calorimeter may be lessened by the use of a heating value computer, which has been designed by one of the members of the Committee. The computer consists of a circular slide rule, with divisions corresponding to the readings made on the calorimeter. This computer gives the corrected heating value of a cubic foot of gas in B. T. U's, having the barometer and temperature of the metered gas, and the difference in temperature between the inlet and outlet water and the pounds of water passed. This computer is designed to operate within the limits recommended by the Committee and will give corrected heating value of the gas of from 300 to 800 B. T. U's. Should a gas of a lower or higher heating value than 300 to 800 B. T. U's be measured, the computer can still be used by dividing or multiplying one of the other factors in its computation.

18. Suggestions for Further Investigation:

Your Committee, knowing that much could be learned by further investigation of the subject of Calorimetry, suggests the following topics, not with the idea that their investigation is necessary as an adjunct to commercial calorimetry as at present practiced, but as a means of further enlightenment on the general subject as affecting close and scientific determinations:

Effect on calorific readings resulting from a varying atmospheric humidity.

Effect on heating value resulting from a difference in temperature between the inlet water and room atmosphere.

Determination of heat lost through the products of combustion leaving the calorimeter above or below the atmospheric temperature.

Respectfully submitted,

R. B. Brown, *Chairman.*
C. F. Burgess,
J. B. Klumpp,
Sub-Committee on Calorimetry.

APPENDIX A.

The Junkers Gas Calorimeter.

This apparatus consists essentially of a combustion chamber, the walls of which consist of an annular copper vessel. Inside this annular space a large number of copper tubes are fitted, through which the products of combustion escape by flowing down from the top of the chamber to an outlet closed by a throttle valve at the bottom. A current of cold water surrounds the tubes, and, flowing upwards, escapes through a suitable outlet at the top of the apparatus. The coldest water, therefore, meets the coldest gases. As a consequence, products of combustion are completely reduced to atmospheric temperature before they escape to outer air. Thermometers are fitted both at the point where the water enters and at that where it escapes. The rate of flow is maintained constant by leading the supply into a small tank with an overflow, whilst the heated water escapes from a second overflow. The heat-producing flow is thus kept constant, but the rate can be adjusted to any desired speed by means of a cock at the inlet to the calorimeter. The water supply required is from one-fifth to two-thirds of a gallon per minute. The gas supply to burner is measured through any accurate meter, and it is well to introduce an efficient governor between this and the burner. The water supply tube is connected to the nipple, and adjusted so that the rise of temperature in the outflowing water is from 10 degrees to 20 degrees Cent. The tightness of the gas connections is ascertained by turning off the burner, when the meter index should remain perfectly stationary. The height of the flame should be so adjusted that not more than 6,000 British thermal units are produced per hour. In taking the readings, the hot water discharge is turned into the measuring glass, when the pointer of the gas meter passes the zero mark. The temperature of the discharge is noted five or six times whilst measuring glass is

filling, which takes from one to six minutes. When full, the gas is turned off, and the quantity used read. Having obtained this, and knowing the quantity of water used, and the number of degrees through which it has been raised, the calorific value per cubic foot of gas is readily obtained.

The Boys Gas Calorimeter.

This calorimeter, which has been designed by Mr. Boys, is shown in vertical section. It consists of three parts, which may be separated, or which, if in position, may be turned relatively to one another about their common axis. The parts are (1) the base A, carrying a pair of burners B, and a regulating tap. The upper surface of the base is covered with a bright metal plate held in place by three centering and lifting blocks C. The blocks are so placed as to carry (2) the vessel D, which is provided with a central copper chimney E and a condensed water outlet F. Resting upon the rim of the vessel D are (3) the water circulating system of the calorimeter attached to the lid G. Beginning at the center where the outflow is situated, there is a brass box which acts as a temperature equalizing chamber for the outlet water. Two dished plates of thin brass KK are held in place by three scrolls of thin brass LLL. These are simply strips bent round like unwound clock springs, so as to guide the water in a spiral direction inwards, then outwards and then inwards again to the outlet. The lower or pendent portion of the box is kept cool by circulating water, the channel for which may be made in the solid metal, as shown, on the right side, or by sweating on a tube as shown on the left. Connected to the water channel at the lowest point by a union are five or six turns of copper pipe, such as is used in a motor car radiator of the kind known as Clarkson's. In this a helix of copper wire threaded with copper wire is wound round the tube, and the whole is sweated together by immersion in a bath of melted solder. A second coil of pipe of similar construction surrounding the first is fastened to it at the lower end by a union. This terminates at the upper end in a block, to which the inlet water box and thermometer

holder are secured by a union as shown at O. An outlet water box P and thermometer holder are similarly secured above the equalizing chamber H. The lowest turns of the two coils MN are immersed in the water which in the first instance is put into the vessel D.

Between the outer and inner coils MN is placed a brattice Q, made of thin sheet brass, containing cork dust to act as a heat insulator. The upper annular space in the brattice is closed by a wooden ring, and that end is immersed in melted rosin and beeswax cement, to protect it from any moisture which might condense upon it. The brattice is carried by an internal flange, which rests upon the lower edge of the casting H. A cylindrical wall of thin sheet brass, a very little smaller than the vessel D, is secured to the lid so that when the instrument is lifted out of the vessel and placed upon the table, the coils are protected from injury. The narrow air space between this and the vessel D also serves to prevent interchange of heat between the calorimeter and the air of the room.

The two thermometers for reading the water temperatures and a third for reading the temperature of the outlet air are all near together and at the same level. The lid may be turned round into any position relatively to the gas inlet and condensed water drip that may be convenient for observation, and the inlet and outlet water boxes may themselves be turned so that their branch tubes point in any direction.

A regular supply of water is maintained by connecting one of the two outer pipes of the overflow funnel to a small tap over the sink. The overflow funnel is fastened to the wall about one meter above the sink and the outer pipe is connected to a tube in which there is a diaphragm with a hole about 2.3 mm. in diameter. This tube is connected to the inlet pipe of the calorimeter. A piece of stiff rubber pipe long enough to carry the outflow water clear of the calorimeter is slipped on to the outflow branch and the water is turned on so that a little escapes by the middle pipe of the overflow funnel, and is led by a third piece of tube into the sink. The amount of

water that passes through the calorimeter in four minutes should be sufficient to fill the graduated vessel to some point above the lowest division, but insufficient in five minutes to come above the highest division. If this is not found to be the case, a moderate lowering of the overflow funnel or reaming out of the hole in the diaphragm will make it so. The overflow funnel should be provided with a lid to keep out dust.

The thermometers for reading the temperature of the inlet and outlet water should be divided on the centigrade scale into tenths of a degree, and they should be provided with reading lenses and pointers that will slide upon them. The thermometers are held in place by corks fitting the inlet and outlet water boxes. The positions of these thermometers should be interchanged every month. The thermometers for reading the temperature of the air near the instrument and of the effluent gas should be divided on the centrigrade scale into degrees.

The flow of air to the burners is determined by the degree to which the passage is restricted at the inlet and at the outlet. The blocks C which determine the restriction at the inlet are made of metal 3/16 inch or about 5 millimetres thick, while the holes round the lid which determine the restriction at the outlet are five in number and are 5/8-inch or 16 millimetres in diameter. The thermometer used for finding the temperature of the effluent gas is held by a cork in the sixth hole in the lid so that the bulb is just above the upper coil of pipe.

The calorimeter should stand on a table by the side of a sink so that the condensed water and hot water outlets overhang and deliver into the sink. A suitable change-over funnel may be constructed as follows:

A piece of india-rubber tube reaching nearly to the base should be attached to the waste water-pipe so as to avoid splashing, and another piece may conveniently be slipped on to the condensed water outlet so as to lead the condensed water into a flask, but care should be taken that the small side hole is not covered by the tube. A glass vessel must be provided of the size of the vessel D, containing water in

which is dissolved sufficient carbonate of soda to make it definitely alkaline. The calorimeter after use is lifted out of its vessel D and placed in the alkaline solution and there left until it is again required for use. The liquid should not, when the calorimeter is placed in it, come within two inches of the top of the vessel. The liquid must be replenished from time to time, and its alkalinity must be maintained.

The above description of the Boys Calorimeter was taken from "The Notification of the Metropolitan Referees for the Year 1908."

The Simmance-Abady Gas Calorimeter.

This instrument consists of an outer casing, the interior of which is divided into a series of annular spaces, through which the hot gases from a Bunsen burner may pass. These gases flow out at a point at which a thermometer is placed for registering the temperature of the outflowing gases. A small damper is fitted to regulate the size of the opening past the thermometer. Each alternate annular space is closed at the bottom so as to form a container for the water inside the vessel. These water spaces are connected together at the top and bottom by small radial pipes. The hot gases from the burner rise and then pass down the spaces. The inflowing water enters at the cock and passes the thermometer, where its temperature is taken. From there it travels down the outer annular space, then through the radial pipes, up the next space, through the top radial pipes, down once more, then again through the radial pipes at the bottom, and up the last space to the top of the instrument, where its temperature is taken by another thermometer. After this it flows out through a pipe where there is a movable funnel, by means of which the water can be directed either into a graduated measure or can run to waste. There is a tube at the top of the instrument which forms a gauge to indicate the height of the water in the apparatus. At the point where the hot gases issue from the calorimeter, there is a small pipe, which conveys the water formed by combustion into a small graduated measure. The calorimeter is connected to a small

ball-valve cistern, thus insuring a practically constant flow, and this flow should go on unceasingly, a pipe leading it away to waste, after it has traversed the instrument. The gas passes through a central dial meter (having a long pointer and a plainly marked dial), through a sensitive balance-valve governor (to take up unusually violent pulsations), and thus to the burner, constantly burning in the calorimeter, and imparting the whole of its heat to the flowing water. Large, distinctly scaled thermometers show the temperatures of the inlet and outlet water, and, the water and gas being both practically constant in flow, the temperature indications are reliable guides.

The Sargent Calorimeter.

The Sargent Calorimeter consists essentially of a water heater, so arranged that the heat developed by the combustion of the gas will be entirely absorbed by a quantity of measured water.

The outer casing of this calorimeter is jacketed with wood to prevent the radiation of heat. The interior is a combustion chamber for the gas, surrounded by a compartment containing the jacket water. The combustion chamber is high enough to allow a suitable flame to be inserted without its impinging upon any part of the instrument. The products of combustion rise to the upper interior, then are diverted down through a series of small tubes to the bottom, and pass out through an opening, the size of which is controlled by a damper. The water enters in an opening at the top of the calorimeter. In the first Sargent instrument the water passed down through and just inside of the outer shell, then up and down several times, surrounding the small tubes carrying off the products of combustion of the gas, and finally leaving at the top on a level with the inlet. In the second instrument the course of the water was down adjacent to the outer shell, then up once, surrounding the combustion tubes, and passing in a direction opposite to the flow of the products of combustion.

The water head was originally controlled by a gauge on the outlet, but later a fixed elevated weir was adopted for this purpose.

The outflowing water also leaves the calorimeter through a weir overflow, after passing through a controlling cock. The overflow passes to an automatic dumping bucket, which is divided into two parts, one part connecting to an overflow or waste, the other passing the water to a measuring vessel. This dumping bucket is held in position by a keeper. The weight of the water in the full side tends to oscillate the bucket, so that the water will flow into the empty side and through another outlet to the empty receptacle. When the hand of the gas meter passes the zero point an electrical circuit is completed, which, passing through the solenoid, draws down the keeper, and allows the outlet water to automatically change from the full to the empty pail. With such a device the personal error is not only eliminated, but much of the work of the operator is done automatically, thereby allowing him more time for observing the temperatures and weighing the water delivered.

The Gas Meter is of the wet type, with a drum of one-tenth of a cubic foot capacity per revolution. The dial is divided in hundredths of a cubic foot.

The flow of gas from the meter to the burner is regulated by a small leather diaphragm governor, mounted on the top of the meter, at the gas outlet.

The thermometers indicating the temperature of both the inlet and outlet water are side by side, on the same level, at the top of the calorimeter, thus enabling both to be easily and quickly read. These thermometers read in Fahrenheit degrees, and are subdivided to read to one-tenth of one degree. There is a thermometer placed near the outlet damper to register the temperature of the outflow products of combustion.

The water after passing through the calorimeter is caught in a copper vessel and weighed on platform scales.

By weighing the discharged water and using Fahrenheit thermometers, no transformation of units is necessary to get the result in British Thermal Units.

APPENDIX B.

Notification of the Metropolitan Gas Referees for the Year 1908.

As to the Mode of Testing the Calorific Power of the Gas.

(Refers to use of Boys Calorimeter.)

This testing shall be made on such days as the Controlling Authority shall direct.

The Calorimeter to be used in testing the calorific power of the gas shall be one which has been examined and certified by the Gas Referees. A description of the Calorimeter is given in Appendix.

In order to test the gas for calorific power, the gas shall first pass through a meter and a balance governor of the same construction as those on the photometer table. It shall then be led to the gas inlet in the base of the Calorimeter. The gas shall be turned on and lighted, and the tap of the Calorimeter shall be so adjusted as to allow the meter hand to make one turn in from 60 to 75 seconds. The water shall be turned on so that when the regular flow through the Calorimeter has been established a little may pass the overflow of the funnel and trickle over into the sink. Water must be poured in through one of the holes in the lid until it begins to run out at the condensation outlet. The Calorimeter may then be placed upon its base. The measuring vessel carrying the change-over funnel shown in Figs. 16 and 18, pp. 42 and 43, should then be placed in position in the sink so that the outlet water is led into the sink. The hot water outlet tube of the Calorimeter should be above but should not touch the change-over funnel. After an interval of not less than 30 minutes the Gas Examiner, after bringing the reading glasses into position on the thermometers used for measuring the temperature of the inlet and outlet water, shall then make the following observations. When the meter hand is at 75 he shall read the inlet temperature; when it reaches 100 he shall move the funnel so as to direct the outflow into the measuring vessel and at the same time he shall start the stop-clock or a stop-

watch. When the meter hand reaches 25 he shall make the first reading of the outlet temperature. He shall continue to read the outlet temperature at every quarter turn until fifteen readings have been taken. The meter hand will then be at 75. He shall also at every turn of the meter except the last make a reading of the inlet temperature when the meter hand is between 75 and 100. When the meter hand reaches 100 after the last outlet temperature has been read, the Gas Examiner shall shift the funnel so as to direct the outlet water into the sink again and at the same time stop the clock or watch. The barometer and the thermometers showing the temperatures of the effluent gas, of the air near the Calorimeter and of the gas in the meter, shall then be read. The time shown by the stop-clock shall be recorded. The mean of the four readings of the inlet temperature is to be subtracted from the mean of the fifteen readings of the outlet temperature and the difference is to be multiplied by 3 and by the number of litres of water collected and the product is to be divided by the tabular number. The difference in degrees centigrade of the temperature of the effluent gas and of the surrounding air shall be taken, and one-sixth of this difference shall be added to the result previously found if the effluent gas is the warmer of the two, or subtracted if the effluent gas is the cooler of the two.* The result is the gross calorific power of the gas in Calories per cubic foot.

In addition to the observations described, the amount of condensed water resulting from the combustion of the gas shall be measured. For this purpose the condensation water shall be led into a flask not less than twenty minutes after the Calorimeter has been placed in position. The amount collected in not less than thirty minutes shall be measured, the time of collection having been accurately noted.

The number of cubic centimetres collected shall be multiplied by the number of seconds in the time indicated by the stop-clock and by the number 1.86. The number of seconds in the time during which the condensed water was being

*This correction has been found by experiment.

collected shall be multiplied by the tabular number. The first product shall be divided by the second. The quotient is to be subtracted from the gross calorific power. The difference is the net calorific power in Calories per cubic foot. The gross and net calorific power in British Thermal Units can be obtained by multiplying the corresponding numbers of Calories by 3.968.

APPENDIX C.

Tests of Dr. Immenkotter.

See "Ueber Heizwertbestimmungen mit besonderer Beruecksichtigung gasfoermiger und fluessiger Brennstoffe," by Theodor Immenkotter.—Press of R. Oldenbourg, Berlin, 1905.

From a series of tests on the Junkers gas calorimeter, Dr. Immenkotter arrives at the following conclusions:

1. That the combustion is perfect.

2. That the influence of radiation from the flame downwards is negligible, being at the most about ¾ B. T. U. per cubic foot.

3. That the conduction of heat by the burner stem plays no appreciable part, the stem being cool.

4. That the loss of heat to the surrounding air effects the heating value to the extent of no more than .03% per degree temperature difference between air and warmed water.

5. That heat carried off by the products of combustion (apart from water vapor), affects the readings of heating values only by .027 per cent, with an exact supply of air, to .12 per cent., with a 4-fold supply of air, per degree difference between the air and the spent gases.

6. That with regard to the moisture in the spent gases, these are found not to be saturated, but their temperature of saturation is found to be approximately the same as the temperature of the feed water.

7. That errors in the time of opening or shutting stop cocks mostly offset one another.

8. That weighing the water can be done quite exactly;

that errors in temperature reading need not come to more than .01, which on a raise of 20 degrees represents not more than .05 per cent.

9. The meter for measuring the gas burned needs to be verified.

10. That the estimation of the amount of water formed (which serves as a datum for computing the lower heating value of the gas) requires that the gas should be burned in the calorimeter for, say, one-half hour, 200 liters of gas burned in that time giving about 200 grammes of water contents.

11. That there is a combination which favors uniformity of heating of the water in respect that any water tube which happens to be colder than the rest has the colder portions of the waste products falling past it more rapidly, and vice versa.

12. That slight variations in the temperature of the feed water, or in the quantity of gas admitted, are slow in affecting the thermometers.

13. That the height of the flame should be watched, for it must not be allowed to vary.

	1	2	3	4	5	6	7	8	9	10
Barometer..	29.23	29.23	29.23	29.22	29.22	29.22	29.22	29.22	29.21	29.22
Temperature Gas.....	73.6	73.8	73.9	73.9	74.1	74.3	74.3	74.3	74.3	74.5
Correction Factor.....	0.938	0.9376	0.9371	0.9367	0.9362	0.9357	0.9357	0.9357	0.9354	0.9353
Humidity.....	59.	61.	61.	61.	63.	63.	63.	63.	63.	63.
Room Temperature...	74.	74.2	74.6	74.5	74.2	74.9	74.7	74.6	74.6	74.
Exhaust Temperature.	77.	77.5	77.5	77.5	78.	78.	78.	78.	78.	79.
Gas Rate Cu. Ft. Hour.	7.2	7.06	7.06	6.97	7.14	7.12	7.13	7.12	7.2	7.05
Gas Consumed Cu. Ft.	0.2	0.2	0.2	0.2	0.2	0.2	0 2	0.2	0.2	0.2
Water Heated—K'gms.	3.442	3.441	3.452	3.439	3.452	3.381	3.385	3.373	3.374	3.371
Inlet Temperature....	74 254	74.357	74.458	74.56	74.852	74.946	75.039	75.349	75.803	76.082
Outlet Temperature...	89.734	89.778	89.848	89.996	90.175	90.573	90 584	90.968	91.409	91.702
Rise in Temperature..	15.48	15.421	15.390	15.436	15.323	15.627	15.545	15.619	15.606	15.62
B. T. U.....	626.1	623.85	624.92	624.7	622.8	622.49	619.89	620.6	620.49	620.60

7-1-08.

APPENDIX D—TABLE OF TEST DATA NO. 1.

BOYS CALORIMETER.—Series I.

	1	2	3	4	5	6	7	8	9
Barometer.....	29.23	29.23	29.23	29.22	29.22	29.22	29.22	29.21	29.22
Temperature Gas "F"	73.6	73.8	73.9	73.9	74.3	74.3	74.3	74.3	74.5
Correction Factor.....	0.938	0.9376	0.9371	0.9367	0.9357	0.9357	0.9357	0.9354	0.9353
Humidity	59.	59.	61.	61.	63.	63.	63.	63.	63.
Room Temperature...	74.	74.2	74.6	74.5	74.9	74.75	74.65	74.8	74.7
Exhaust Temperature.	77.5	78.	78.	78.4	78.8	79.	79.	79.3	79.5
Gas Rate Cu. Ft. Hour	3.75	3.69	3.72	3.80	3.73	3.72	3.70	3.66	3 66
Gas Consumed Cu. Ft.	0.2	0.2	0.2	0.2	0.2	0.2	0.2	0.2	0.2
Water Heated—Lbs...	7.281	7.416	7.3699	7.233	7.3986	7.421	7.451	7.491	7.5419
Inlet Temperature "C"	23.449	23.544	23.615	23.649	23.917	23.872	24.138	24.266	24.51
Outlet Temp. "C"....	32.143	32.077	32.198	32.385	32.424	32.358	32.592	32.633	32.818
Rise in Temp. "F"...	15.649	15.359	15.449	15.724	15.312	15.274	15.217	15.060	14.954
B. T. U.....	607.4	607.4	607.5	607.1	605.4	605.8	606.3	604.1	602.4

Luminous Flame Used in All Tests.

7-1-08.

APPENDIX D.—Table of Test Data No. 2.

U. G. I. SARGENT (NEW).—Series I.

	1	2	3	4	5	6	7	8	9
Barometer.....	29.23	29.23	29.23	29.22	29.22	29.22	29.22	29.21	29.22
Temperature Gas.....	73.6	73.8	73.9	73.9	74.3	74.3	74.3	74.3	74.5
Correction Factor.....	0.9380	0.9376	0.9371	0.9367	0.9357	0.9357	0.9357	0.9354	0.9353
Humidity %.....	59.	61.	61.	61.	63.	63.	63.	63.	63.
Room Temperature...	74.	74.2	74.6	74.5	74.8	74.7	74.6	74.6	76.6
Exhaust Temperature.	76.	76.	76.	76.5	77.	77.	77.	77.	78.
Gas Rate Cu. Ft. Hour	5.14	5.14	4.96	4.87	4.93	5.00	4.93	4.93	4.89
Gas Consumed Cu. Ft.	0.2	0.2	0.2	0.2	0.2	0.2	0.2	0.2	0.2
Water Heated—K'gms.	3.415	3.450	3.490	3.479	3.403	3.379	3.363	3.360	3.364
Inlet Temperature....	74.303	74.405	74.556	74.609	75.096	75.006	75.552	75.738	76.19
Outlet Temperature...	89.617	89.568	89.55	89.665	90.394	90.409	91.01	91.102	91.509
Rise in Temperature..	15.314	15.163	14.994	15.056	15.298	15.403	15.458	15.364	15.319
B. T. U.....	614.6	615.0	615.5	616.4	613.38	613.13	612.56	608.34	607.3

APPENDIX D—Table of Test Data No. 3.

U. W. JUNKERS.—Series E.

At Varying Gas Consumption per Hour with Rise in Temperature maintained constant.

	1	2	3	4	5	6	7	8	9
Barometer.....	29.3	29.3	29.3	29.3	29.3	29.3	29.3	29.3	29.3
Temperature Gas.....	77.5	77.5	77.5	77.5	77.5	77.5	77.5	77.5	77.5
Correction Factor.....	.9307	.9307	.9307	.9307	.9307	.9307	.9307	.9307	.9307
Humidity	57.	57.	57.	57.	57.	57.	57.	57.	57.
Room Temperature...	78.2	78.3	78.3	78.2	78.6	78.6	78.6	78.7	78.9
Exhaust Temperature.	76.	76.5	76.0	76.5	76.3	76.5	76.	76.	76.
Gas Rate Cu. Ft. Hour	2.15	3.27	4.00	5.00	5.80	6.93	8.17	9.22	10.3
Gas Consumed Cu. Ft.	0.2	0.2	0.2	0.2	0.2	0.2	0.2	0.2	0.2
Water Heated—Lbs...	7.233	7.7554	7.193	7.361	7.502	7.400	7.509	7.550	7.131
Inlet Temperature....	72.915	72.731	72.549	73.441	72.766	72.71	72.651	72.63	72.529
Outlet Temperature...	89.149	88.434	89.073	89.644	88.760	88.723	88.479	88.535	88.945
Difference.....	16.234	15.703	16.524	16.203	15.994	16.210	16.018	15.905	16.416
B. T. U.....	630.8	637.3	638.5	640.75	644.6	644.4	646.2	645.1	628.9

6-26-08 P. M.

APPENDIX D—Table of Test Data No. 4.

BOYS CALORIMETER.—SERIES H.

	1	2	3	4	5	6
Barometer	29.00	29.22	29.22	29.00	29.00	29.00
Temperature of Gas	70.25	72.9	72.0	70.9	71.6	72.0
Correction Factor	.9401	.9404	.9402	.9384	.9366	.9356
Humidity	65.	61.	61.	69.	69.	69.
Room Temperature	72.5	74.0	74.0	72.85	73.8	74.25
Exhaust Temperature	72.6	72.5	74.5	74.5	75.5	75.8
Gas Rate—Cu. Ft. Hour	2.08	2.34	2.79	3.61	5.12	5.46
Gas Consumed—Cu. Ft.	.2	.2	.2	.2	.2	.2
Water Heated—Lbs.	6.938	7.714	8.5141	7.961	5.997	5.67
Inlet Temperature "C"	22.2	21.773	21.807	22.47	22.559	22.61
Outlet Temperature "C"	30.8645	29.6765	29.092	30.313	32.949	32.415
Difference "F"	15.596	14.2263	13.113	14.1174	18.702	19.449
B. T. U.	575.4	583.5	593.7	598.7	598.7	589.3

Impossible to maintain constant rise in temperature on account of size of coil.

APPENDIX D—TABLE OF TEST DATA NO. 5.

U. W. CHEM. ENG. JUNKERS.—SERIES K.

	1	2	3	4	5
Room Temperature.....	74.65	74.65	74.9	75.2	75.3
Exhaust Temperature.....	79.5	79.5	79.5	79.5	79.5
Time of Test in Minutes...	3.	3.	3.	3.	3.
Water Heated in Grams...	4140.	4139.	4142.	4133.	4137.
Temperature Inlet "F"...	72.679	72.662	72.692	72.71	72.68
Temperature Outlet "F"..	87.646	87.657	87.671	87.671	87.642
Rise in Temperature "C"	8.315	8.3305	8.322	8.312	8.312
Volts on Heating Coil.....	86.643	86.70	86.6977	86.645	86.555
Amperes on Heating Coil	9.295	9.2956	9.295	9.290	9.285
Small Calories put in.....	34602.5	34627.52	34624.4	34593.3	34530.19
Small Calories observed...	34424.1	34479.9	34469.7	34353.49	34386.7
Efficiency	99.48	99.57	99.55	99.30	99.58

7-2-08.

APPENDIX D—TABLE OF TEST DATA NO. 6.

	1	2	3	4	5	6
Room Temperature.....	75.	75.	75.5	76.	75.5	76.
Exhaust Temperature	76.5	76.5	76.5	76.6	76.7	76.8
Water Heated—Grams.....	4069.	4061.	4068.	4062.	4064.	4065.
Inlet Temperature "F".....	73.139	73.654	73.662	73.659	73.677	73.697
Outlet Temperature "F"....	86.857	86.861	87.002	86.934	87.009	86.943
Rise in Temperature "C"...	7.625	7.337	7.411	7.375	7.4066	7.3589
Time of Tests in Seconds....	180.	180.	180.	180.	180.	180.
Volts	94.8	94.73	94.70	94.65	94.6304	94.60
Amperes	6.8594	6.86	6.8619	6.861	6.862	6.862
Small Calories put in.....	27939.55	27921.36	27920.25	27901.85	27900.14	27891.17
Small Calories observed.....	31009.84	29796.369	30147.95	29957.25	30100.42	29915.92
Efficiency.....	110.99	106.72	107.98	107.36	107.88	107.26

July-7-1908.

APPENDIX D—TABLE OF TEST DATA NO. 7.

SERIES M.

	M. G. L. CO. JUNKERS.					No. 2, U. W. JUNKERS.				
	6	7	8	9	10	6	7	8	9	10
Barometer.....	29.21	29.21	29.21	29.21	29.21	29.21	29.21	29.21	29.21	29.21
Temperature Gas.....	76.37	76.37	76.37	76.37	76.37	76.37	76.37	76.37	76.37	76.37
Correction Factor.....	.9308	.9308	.9308	.9308	.9308	.9308	.9308	.9308	.9308	.9308
Humidity %.....	61.	61.	61.	61.	61.	61.	61.	61.	61.	61.
Room Temperature...	76.4	76.4	76.4	76.5	76.5	76.4	76.45	76.4	76.5	76.5
Exhaust Temperature.	77.	77.	77.	77.	77.	77.2	77.2	77.3	77.3	77.3
Gas Rate Cu. Ft. Hour	7.12	7.12	7.06	7.00	7.07	7.07	7.07	7.07	7.07	7.07
Gas Consumed Cu. Ft.	0.2	0.2	0.2	0.2	0.2	0.2	0.2	0.2	0.2	0.2
Water Heated—Lbs....	7.2774	7.2377	7.2686	7.2708	7.2619	7.478	7.372	7.363	7.403	7.374
Inlet Temperature....	74.276	74.285	74.307	74.341	74.404	74.188	74.19	74.228	74.254	74.304
Outlet Temperature...	89.833	89.886	89.892	89.953	90.007	89.467	89.658	89.755	89.749	89.861
Rise in Temperature...	15.557	15.601	15.585	15.612	15.603	15.279	15.468	15.527	15.495	15.557
B. T. U.....	608.15	606.55	608.51	609.75	608.65	613.75	612.55	614.16	616.19	616. 7

7–8–1908.

APPENDIX D—TABLE OF TEST DATA No. 8.

SERIES M.

	M. G. L. CO. JUNKERS.					U. W. CHEM. ENG. JUNKERS.				
	1	2	3	4	5	1	2	3	4	5
Barometer.....	29.23	29.23	29.23	29.23	29.23	29.23	29.23	29.23	29.23	29.23
Temperature of Gas...	75.92	75.92	75.92	75.92	75.92	75.92	75.92	75.92	75.92	75.92
Correction Factor.....	.9344	.9344	.9344	.9344	.9344	.9344	.9344	.9344	.9344	.9344
Humidity	56.	56.	56.	59.	59.	56.	56.	56.	59.	59.
Temperature Room...	76.	76.	76.	76.	76.1	76.	76.	76.	76.	76.1
Temp. Exhaust Gas...	76.0	76.0	76.0	76.0	76.1	76.8	76.8	76.8	77.0	77.0
Rate of Gas Cu. Ft. Hr.	7.06	7.06	7.06	7.13	7.02	7.01	7.00	7.02	7.02	7.01
Gas Consumed Cu. Ft.	.2	.2	.2	.2	.2	.2	.2	.2	.2	.2
Water Heated—Lbs...	7.3612	7.3545	7.3633	7.3369	7.3520	7.372	7.392	7.3656	7.3788	7.3678
Inlet Temperature....	73.557	73.601	73.638	73.702	73.712	73.488	73.532	73.577	73.620	73.655
Outlet Temperature...	88.980	89.034	89.060	89.188	89.2147	89.012	89.059	89.127	89.153	89.202
Difference.....	15.423	15.433	15.422	15.486	15.503	15.524	15.527	15.550	15.533	15.547
B. T. U.....	607.51	607.35	607.63	607.98	609.89	612.39	614.17	612.88	613.31	612.95

7-8-1908.

APPENDIX D—TABLE OF TEST DATA NO. 9.

JUNKERS.—SERIES P.

	1	2	3	4	5	6
Barometer	29.09	29.09	29.09	29.09	29.09	29.09
Temperature Gas	73.04	73.13	73.22	73.31	73.4	73.4
Correction Factor	.9359	.9355	.9353	.935	.9348	.9348
Room Temperature	74.65	74.9	74.9	74.9	74.95	75.0
Exhaust Temperature	74.0					
Gas Rate—Cu. Ft. Hour	7.07	7.07	7.07	7.07	7.07	7.07
Gas Consumed—Cu. Ft.	.2	.2	.2	.2	.2	.2
Water Heated—Lbs.	6.8717	6.8563	6.8519	6.8563	6.8585	6.8695
Inlet Temperature	69.888	69.98	70.064	70.182	70.306	70.395
Outlet Temperature	85.572	85.66	85.758	85.873	85.991	86.065
Difference "F"	15.684	15.68	15.694	15.691	15.685	15.670
B. T. U.	575.8	574.6	574.8	575.3	575.2	575.7

APPENDIX D—TABLE OF TEST DATA NO. 10.

SIMMANCE-ABADY.—SERIES P.

	1	2	3	4	5	6
Barometer	29.09	29.09	29.09	29.09	29.09	29.09
Temperature Gas	73.04	73.13	73.22	73.31	73.4	73.4
Correction Factor	.9359	.9355	.9353	.935	.9348	.9348
Room Temperature	74.65	74.9	74.9	74.9	74.95	75.0
Exhaust Temperature	75.0	75.0	74.9	74.9	74.9	74.9
Gas Rate—Cu. Ft. Hour	4.08	4.08	4.08	4.08	4.08	4.08
Gas Consumed—Cu. Ft.	.2	.25	.2	.2	.2	.2
Water Heated—Lbs	7.2046	8.9926	7.2046	7.2068	7.1782	7.1826
Inlet Temperature	69.948	70.022	70.118	70.283	70.380	70.454
Outlet Temperature	86.455	86.331	86.331	86.651	86.836	86.777
Difference "F"	16.507	16.309	16.213	16.368	16.456	16.323
B. T. U.'s	635.3	627.1	624.4	630.8	631.8	627.1

APPENDIX D—TABLE OF TEST DATA NO. 11.

SARGENT.—SERIES T.

	1	2	3	4
Room Temperature.....	71.	71.	71.	71.
Exhaust Temperature.....	77.	77.	77.	77.
Water Heated—Grams.....	3223.	3187.	3168.	3182.
Inlet Temperature "F"	64.954	64.493	64.375	64.248
Outlet Temperature "F"...	80.468	80.098	80.0	79.889
Rise in Temperature "C" ..	8.519	8.6694	8.6805	8.689
Time of Test in Seconds....	180.	186.	180.	180.
Volts.....	95.332	95.027	94.919	94.844
Amperes.....	6.82	6.8	6.79	6.785
Small Calories put in.....	27934.956	27763.925	27691.587	27653.407
Small Calories observed	27779.057	27629.378	27499.824	27448.398
Efficiency °/₀.....	99.5	99.5	99.3	99.2

	1a	1b	2a	2b	3a	3b
Barometer	29.38	29.38	29.38	29.38	29.38	29.38
Temperature of Gas	68.7	68.9	69.6	69.6	69.6	69.6
Correction Factor	.9569	.9563	.9545	.9545	,9545	.9545
Temperature Room	70.0	70.1	70.1	70.1	70.3	60.3
Temperature Exhaust	67.7	70.7	67.5	67.5	67.5	67.5
Rate of Gas Cu. Ft. Hour	3.0	3.0	4.07	4.04	5.15	5.15
Gas Consummed Cu. Ft.	.2	.2	.3	.2	.2	.2
Water Heated—Lbs	7.844	7.985	7.985	7.3325	7.705	7.6918
Inlet Temperature	65.052	65.012	64.982	64.940	64.902	64.902
Outlet Temperature	80.048	79.770	80.951	80.958	80.308	80.223
Difference	14.996	14.758	15.969	16.037	15.406	15.321
B. T. U.	614.5	616.1	613.4	616.1	621.8	617.0

SARGENT.—SERIES S (Continued.)

	4a	4b	5a	5b	6a	6b	7a	7b
Barometer.....	29.38	29.38	29.38	29.38	29.38	29.38	29.38	29.38
Temperature of Gas....	69.6	69.6	69.6	69.6	69.6	69.6	69.6	69.6
Correction Factor.....	.9545	.9545	.9545	.9545	.9545	.9544	.9545	.9545
Temperature Room....	70.2	70.3	70.3	70.1	70.1	70.0	69.6	69.6
Temperature Exhaust..	67.5	67.5	67.5	67.5	67.7	67.5	67.7	97.7
Rate of Gas Cu. Ft. Hr.	6.10	6.10	7.2	7.2	8.00	8.00	9.3	9.24
Gas Consumed Cu. ft...	.2	.2	.2	.2	.2	.2	.2	.2
Water Heated—Lbs....	7.5309	7.5618	7.3303	7.2973	7.5121	7.5507	6.8717	6.8563
Inlet Temperature.....	64.902	64.902	64.902	64.902	64.824	64.803	64.748	64.704
Outlet Temperature....	80.545	80.535	80.943	81.06	80.484	80.446	81.823	81.804
Difference	15.643	15.633	16.041	16.158	15.66	15.643	17.075	17.1
B. T. U.....	617.1	619.2	615.9	617.6	616.2	618.7	614.6	614.1

SIMMANCE-ABADY.—SERIES S.

	1a	1b	2b	3a	3b	4a	4b
Barometer.....	29.38	29·38	29.38	29.38	29.38	29.38	29.38
Temperature of Gas....	68.7	68.7	68.6	69.6	69.6	69.6	69.6
Correction Factor.....	.9569	.9569	.9569	.9569	.9569	.9569	.9569
Temperature Room.....	70.0	70.0	70.2	70.1	70.1	70.2	70.2
Temperature Exhaust...	70.0	70.0	69.0	70.0	70.0	70.0	70.0
Rate of Gas Cu. Ft. Hr.	2.9	2.9	4.0	4.9	4.9	6.07	6.07
Gas Consumed Cu. Ft..	.2	.2	.2	.2	.2	.2	.2
Water Heated—Lbs....	7.5507	7.5706	7.5618	7.8969	7.8991	6.9996	6.9798
Inlet Temperature.....	65.142	65.142	65.042	65.042	64.962	64.942	64.942
Outlet Temperature....	80.506	80.35	80.482	79.93	79.754	81.553	81.651
Difference.....	15.364	15.208	15.360	14.888	14.792	16.611	16.709
B. T. U.....	606.2	601.6	607.6	615.9	612.1	609.1	610.9

Regular Junkers burner without spreader was used in place of Simmance-Abady bunsen. Burner rest was removed and new burner held in place on block of wood so that top of burner entered instrument same distance as regular burner. All tests made after adjusting damper in exhaust to give maximum reading on outlet water thermometer.

SIMMANCE-ABADY.—SERIES S. (Continued.)

	5a	5b	6a	6b	7a	7b
Barometer	29.38	29.38	29.38	29.38	29.38	29.38
Temperature of Gas	69.6	69.6	69.6	69.6	69.6	69.6
Correction Factor	.9545	.9545	.9545	.9545	.9545	.9545
Temperature Exhaust	70.0	70.2	70.0	70.2	70.0	70.0
Rate of Gas Cu. Ft. Hour	7.0	7.0	8.0	8.0	8.95	8.95
Gas Consumed Cu. Ft	.2	.2	.2	.2	.2	.2
Water Heated—Lbs	7.5948	7.6015	7.2509	7.220	7.0746	7.0768
Inlet Temperature	64.892	64.892	64.841	64.841	64.731	64.69
Outlet Temperature	80.323	80.272	81.01	81.122	81.125	81.173
Difference	15.431	15.380	16.169	16.281	16.484	16.483
B. T. U	613.9	612.4	614.1	615.7	610.9	611.0

SIMMANCE-ABADY.—Series U.

	1	2	3	4	
Room Temperature.....	67.5	67.5	67.5	67.5	
Exhaust Temperature....	68.5	68.5	69.	69.	
Water Heated Grams.....	3532.	3521.	2149.	2159.	
Inlet Temperature "F"...	64.391	64.512	64.891	64.901	
Outlet Temperature "F"..	74.403	74.522	80.82	80.953	
Difference "C"	5.562	5.561	8.849	8.918	
Time of Test, Seconds....	120.	120.	120.	120.	
Volts	93.63	93.41	93.186	93.15	
Amperes.....	6.8553	6.8436	6.83	6.83	
Small Calories put in.....	18385.488	18311.518	18246.771	18223.728	
Small Calories observed...	19644.984	19680.281	19016.501	19253.962	
Efficiency.....	106.8	107.4	104.2	105.6	106.0

Oct. 9, 1908

APPENDIX E.

Order of Cuts

Fig. 1—General view of Junker's Calorimeter, with accessories.

Fig. 2—Junker's Calorimeter—Sectional views and elevation.

Fig. 3—Boys' Calorimeter—Sectional view.

Fig. 4—Simmance-Abady Calorimeter—Sectional views.

Fig. 5—General view of final Sargent Calorimeter, with accessories.

Fig. 6—The first Sargent Calorimeter—Sectional views and elevation.

Fig. 7—The first Sargent Calorimeter—Sectional view.

Fig. 8—Electric heater used in efficiency tests.

Fig. 9—General view of modified Junker's Calorimeter, with accessories. Laboratory of Milwaukee Gas Light Co.

Fig. 14—Heating value computer—For calculating the corrected heating value of a gas from calorimeter readings.

Fig. 15—Correction factors for temperature and pressure.

Fig. 16—Curves showing Percentage of Relative Humidity from Wet and Dry Bulb Thermometer Readings.

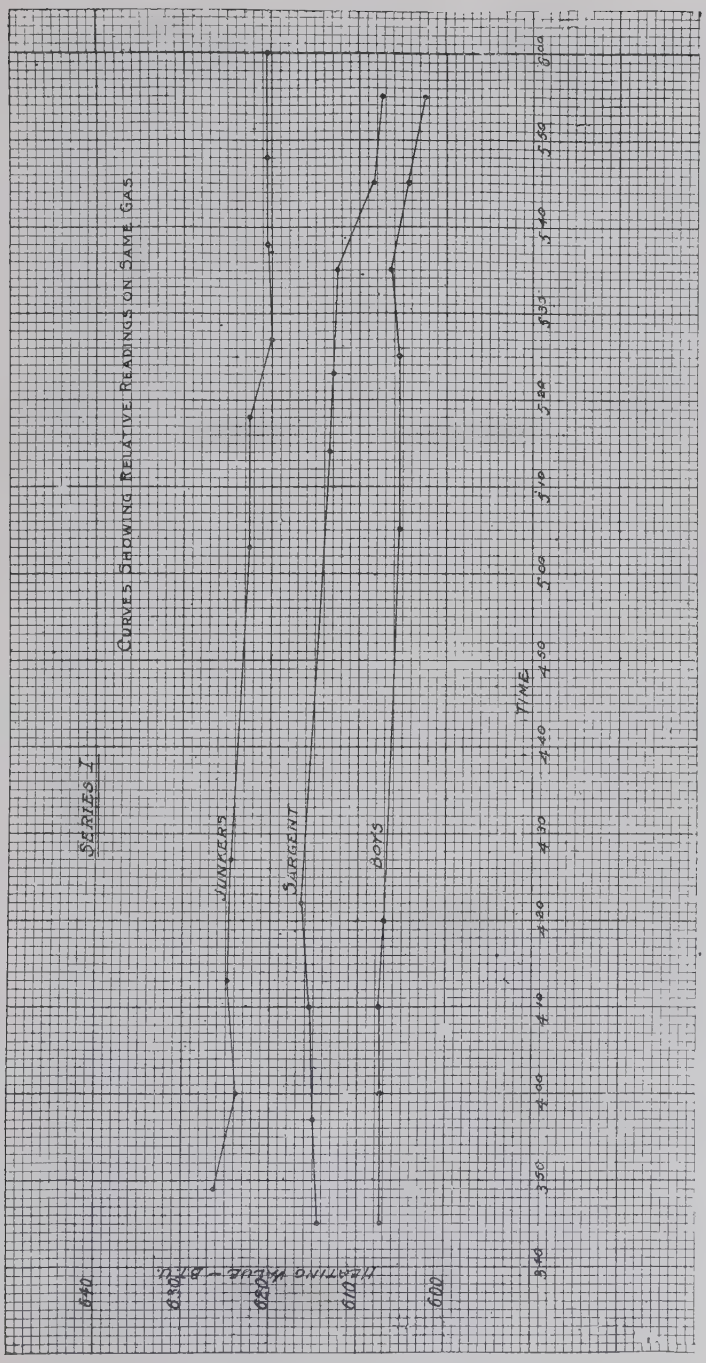

APPENDIX E—CHART NO. 1.

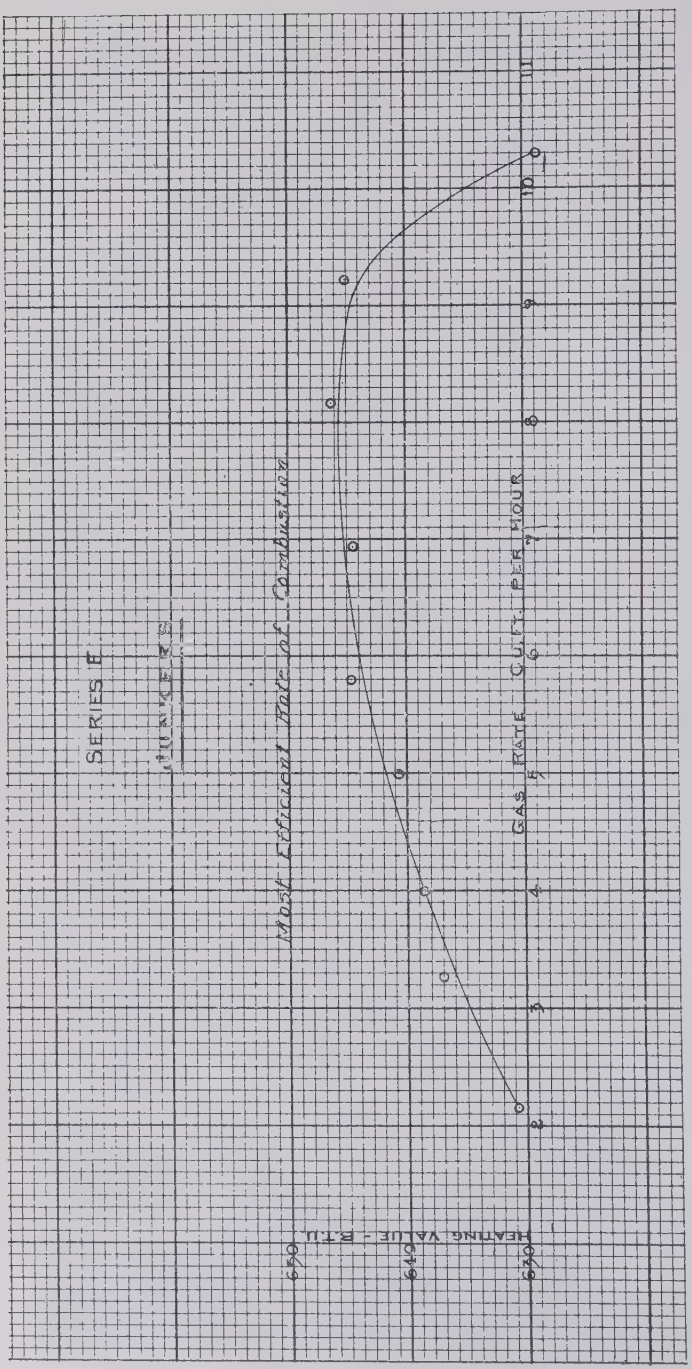

APPENDIX E—CHART NO. 2.

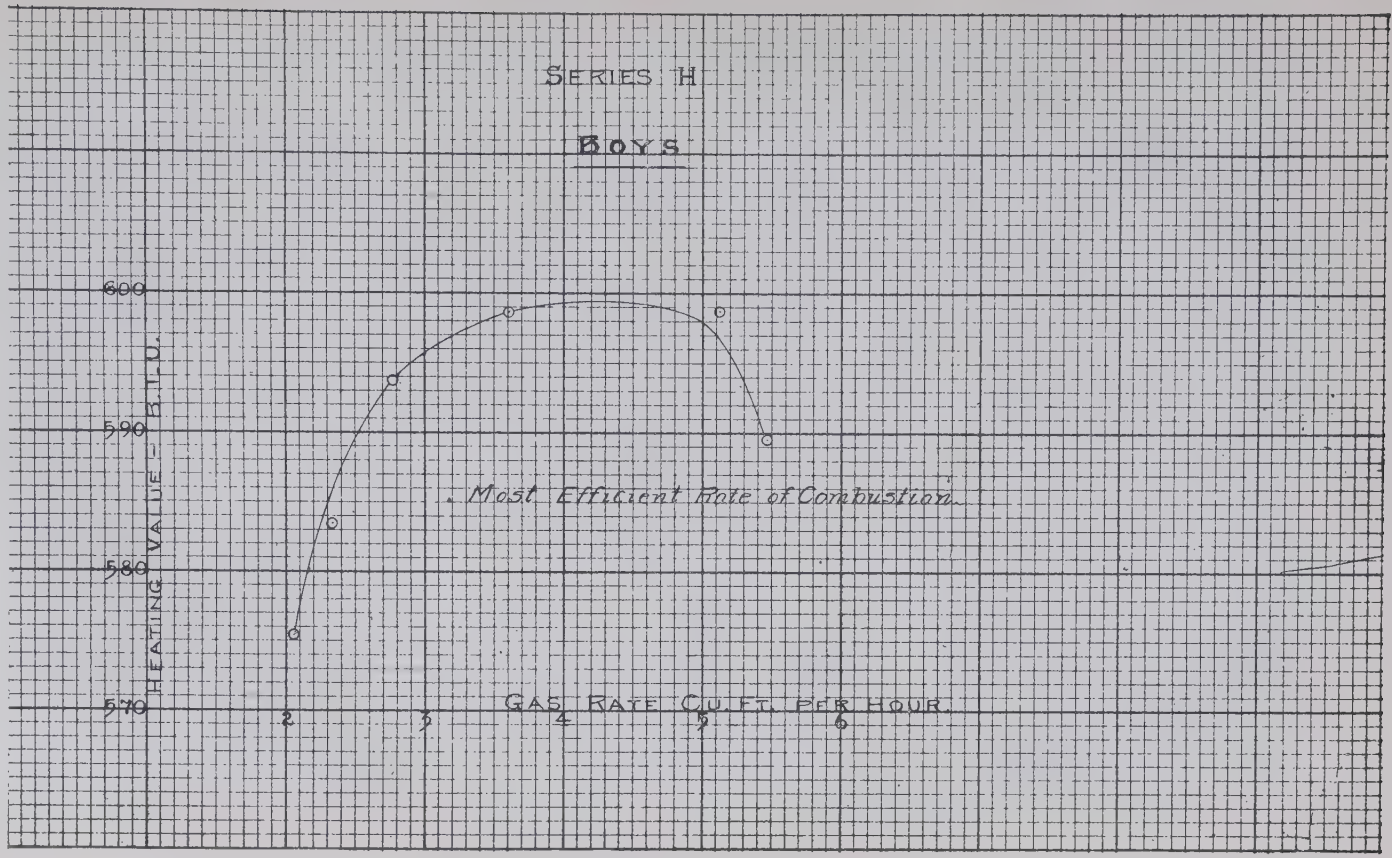

APPENDIX E—CHART NO. 3.

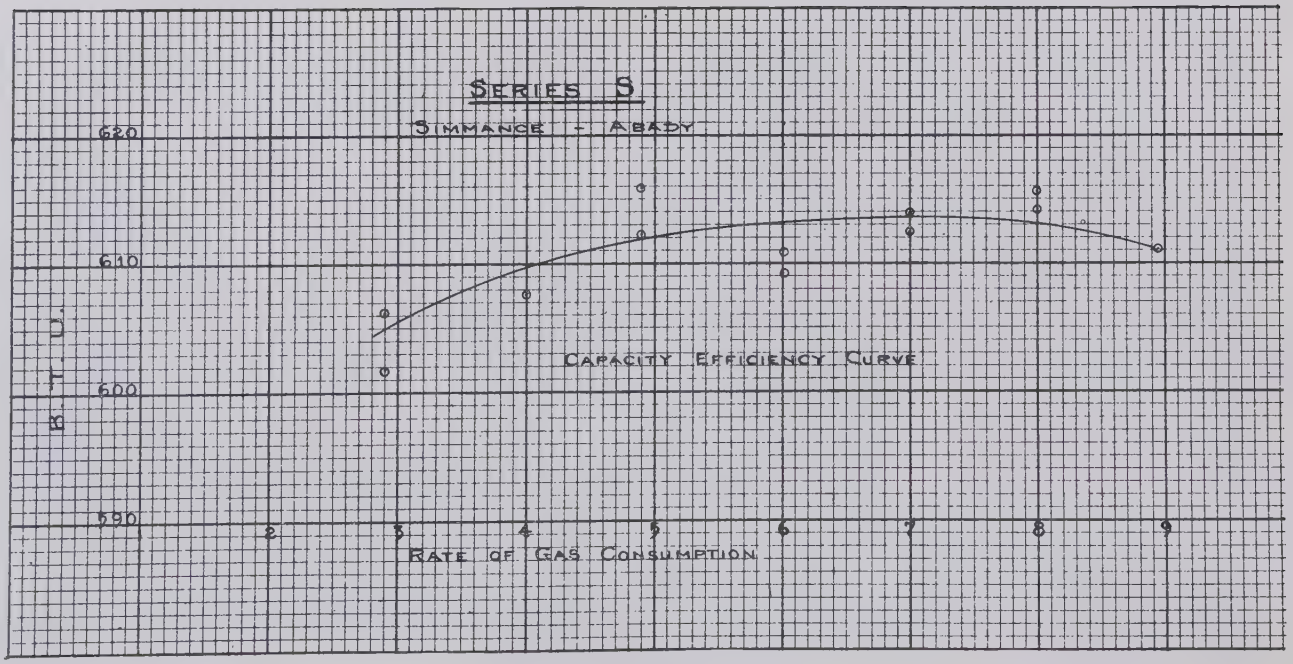

APPENDIX E--CHART NO. 4.

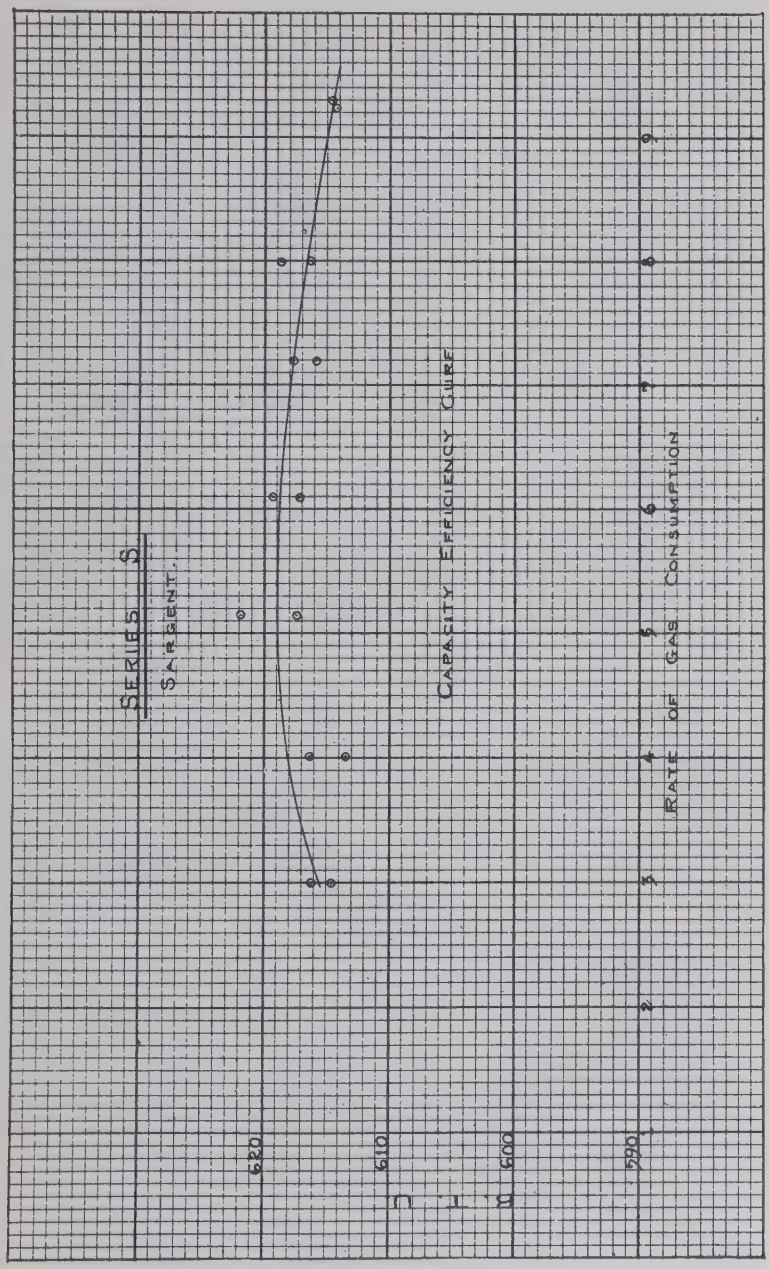

APPENDIX E—CHART NO. 5.

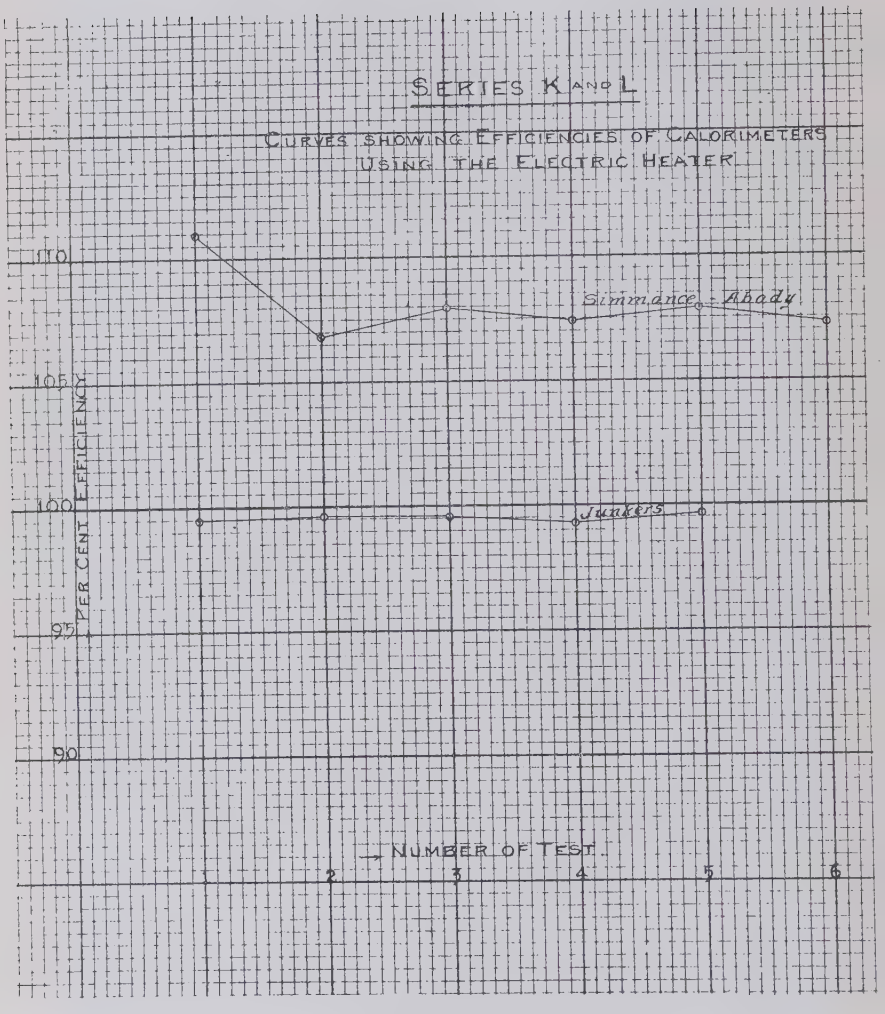

APPENDIX E—CHART NO. 6.

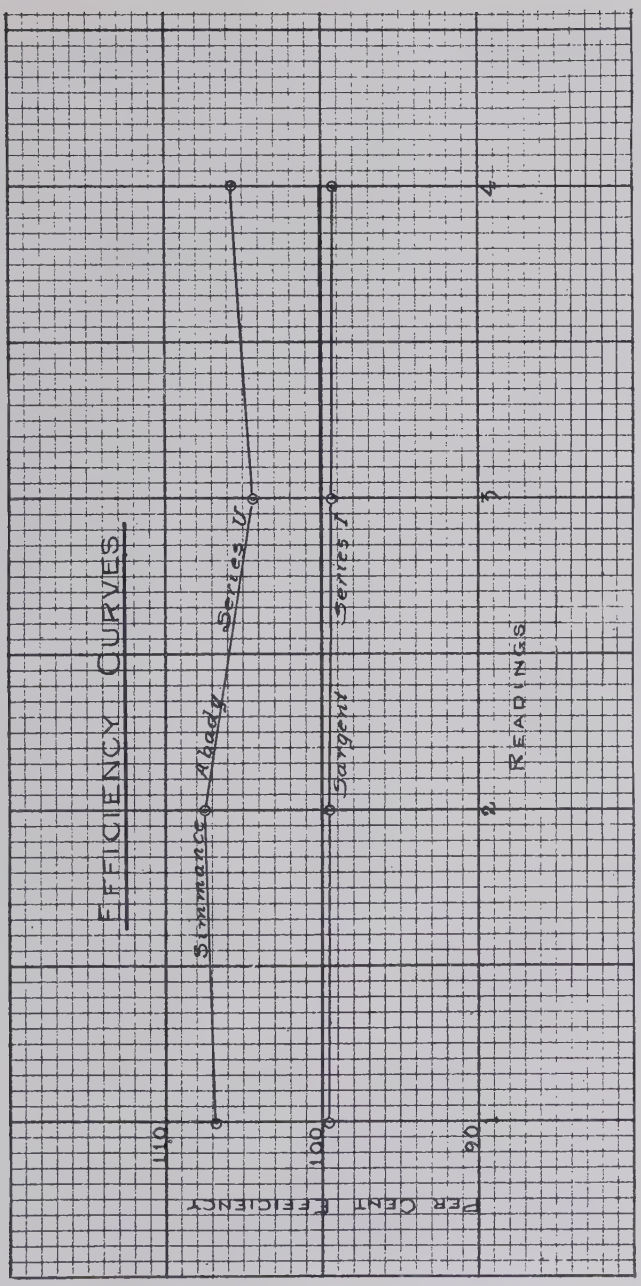

APPENDIX E—CHART NO. 7.

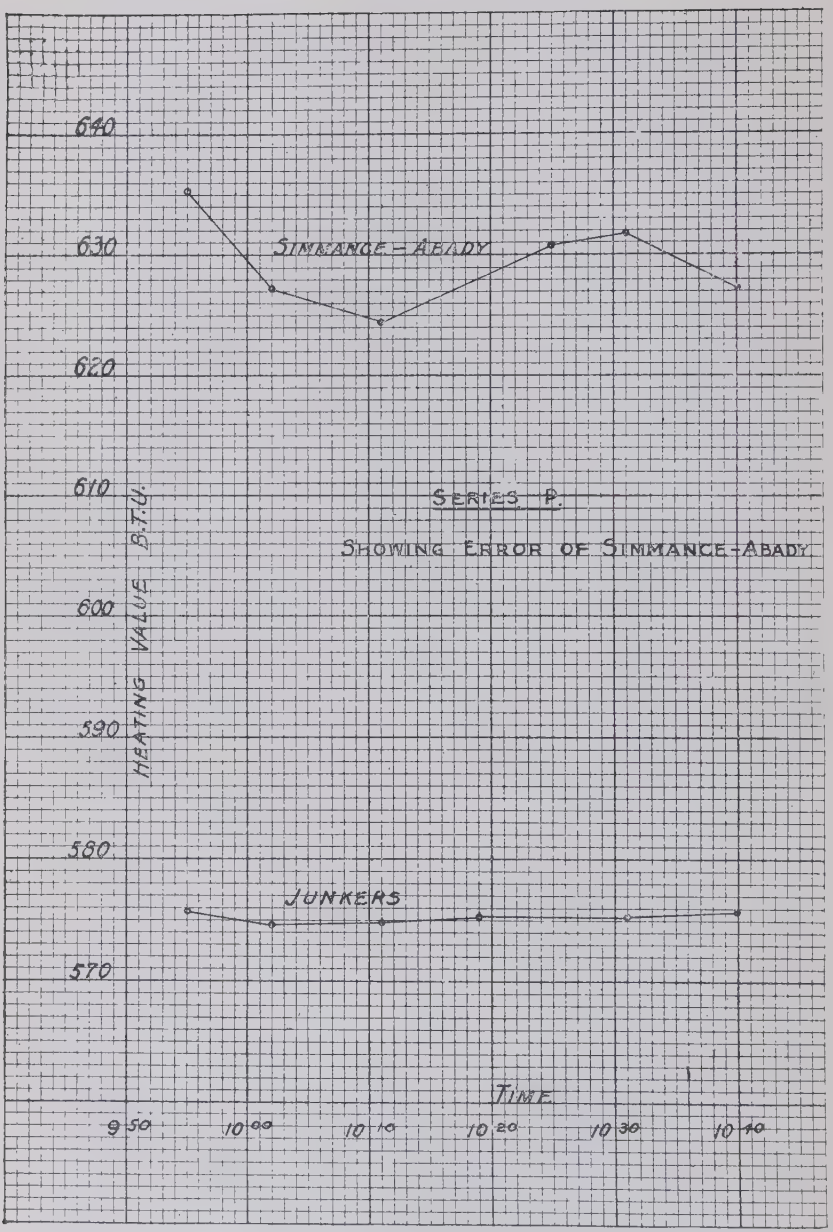

APPENDIX E—CHART NO. 8.

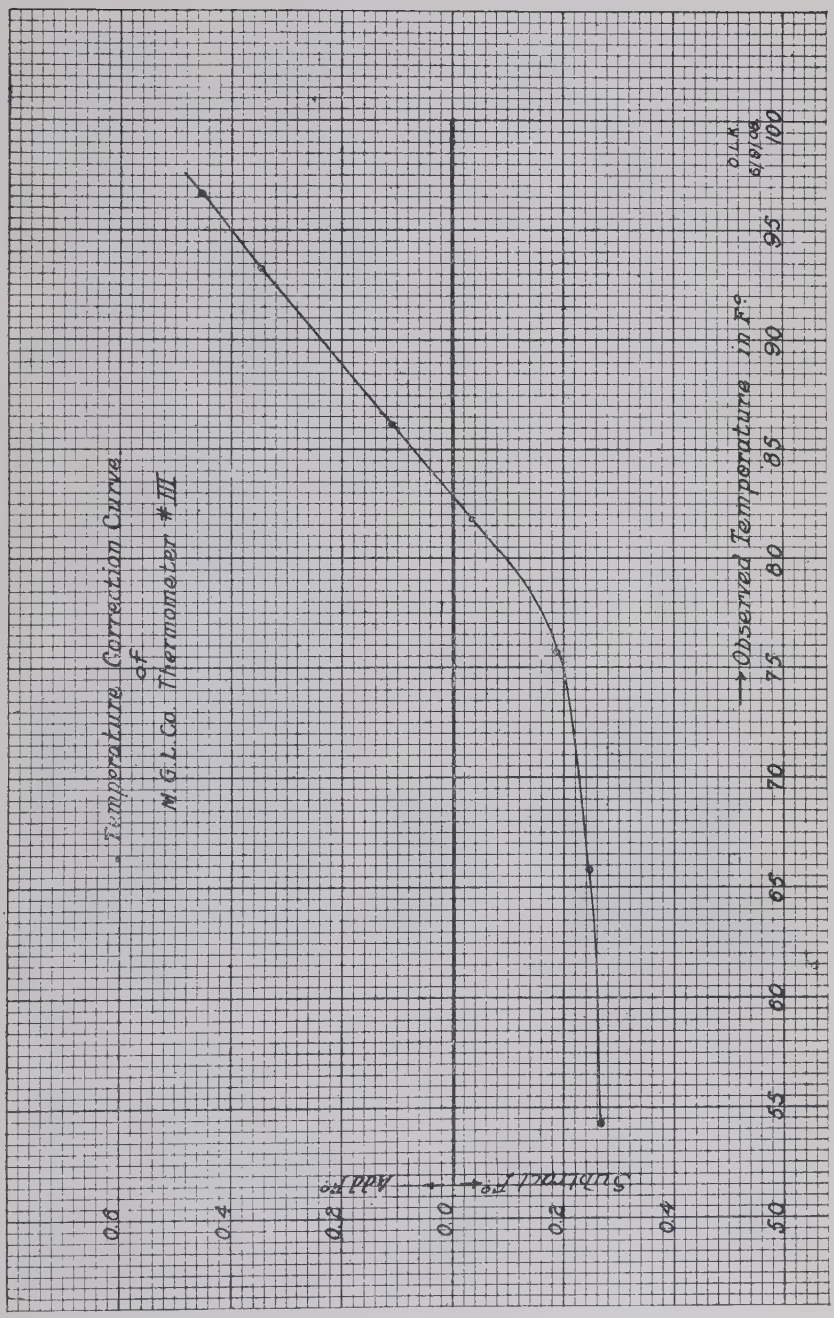

APPENDIX E—CHART NO. 3.

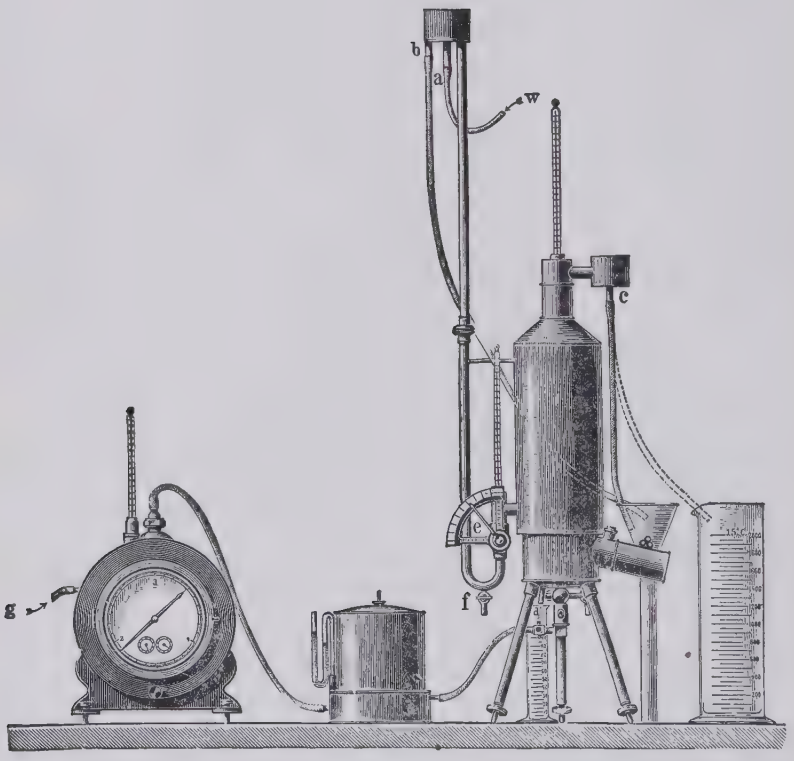

FIG. 1—GENERAL VIEW, JUNKERS CALORIMETER, WITH ACCESSORIES.
APPENDIX E.

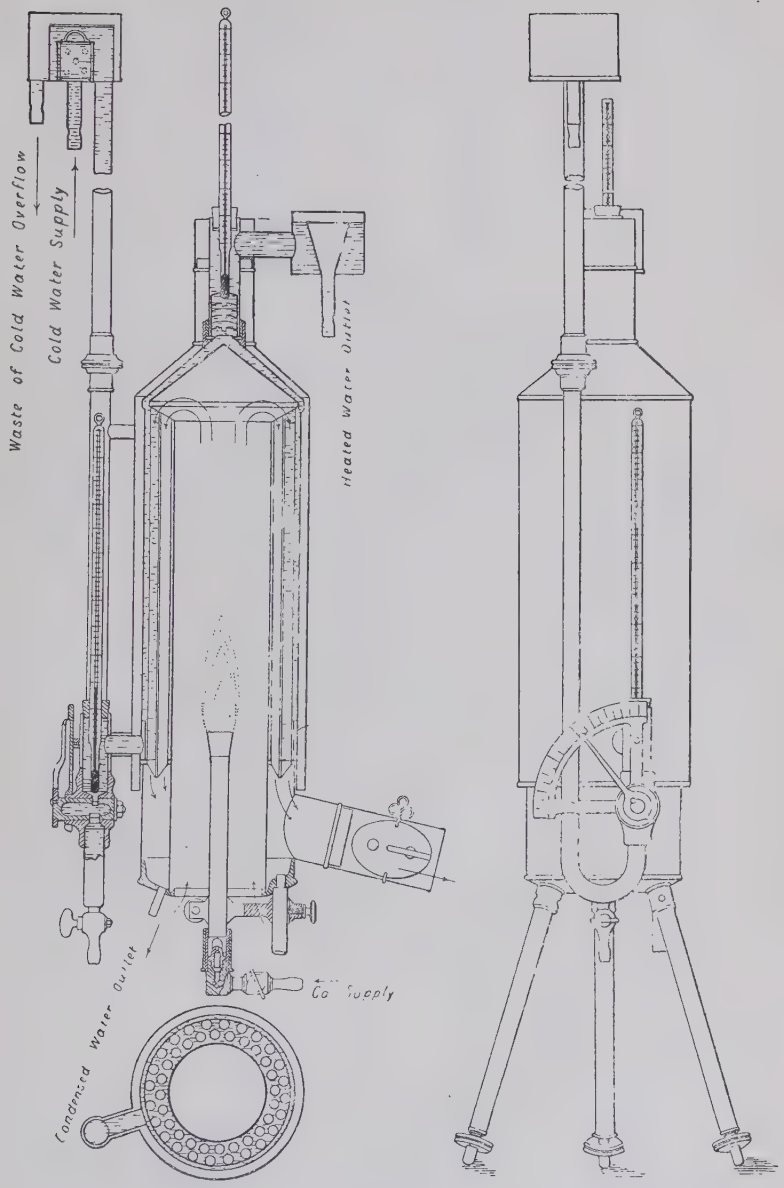

FIG. 2—JUNKERS CALORIMETER. SECTIONAL VIEWS AND ELEVATION.
APPENDIX E.

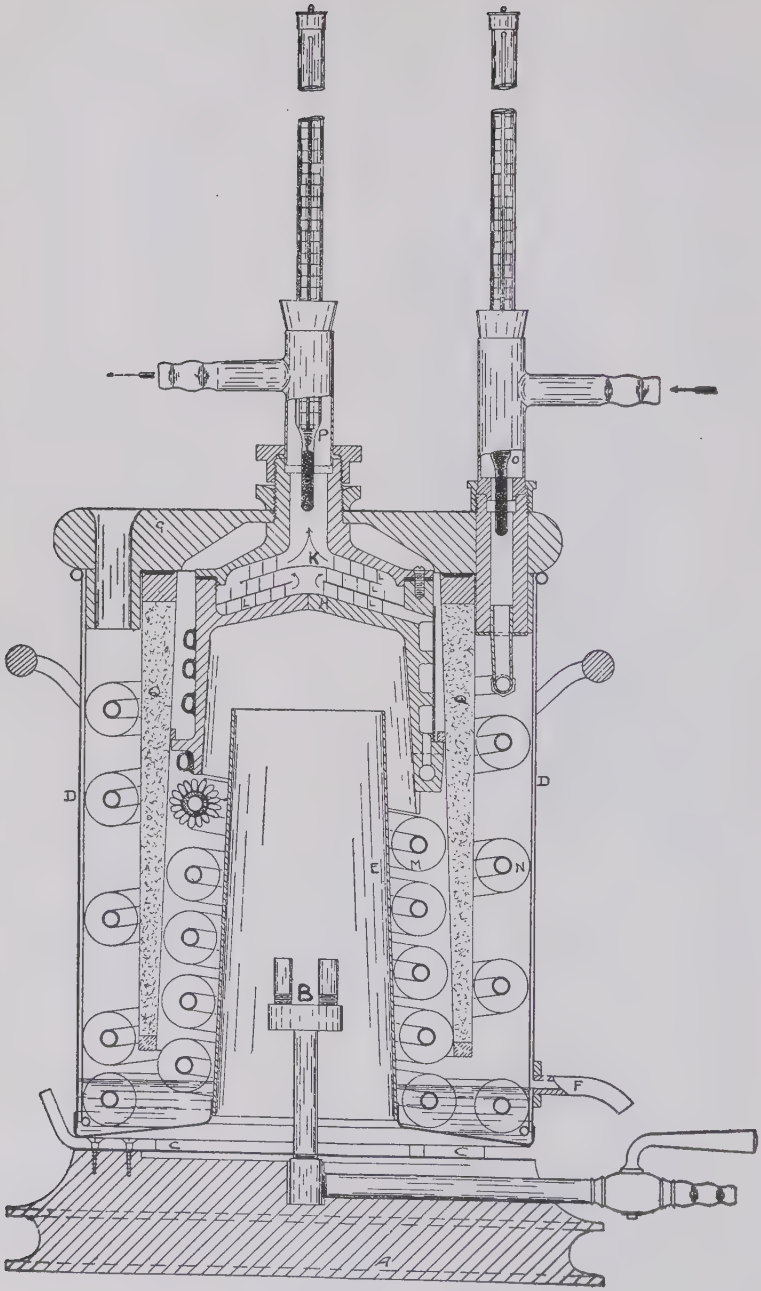

FIG. 3—BOYS CALORIMETER. SECTIONAL VIEW.
APPENDIX E.

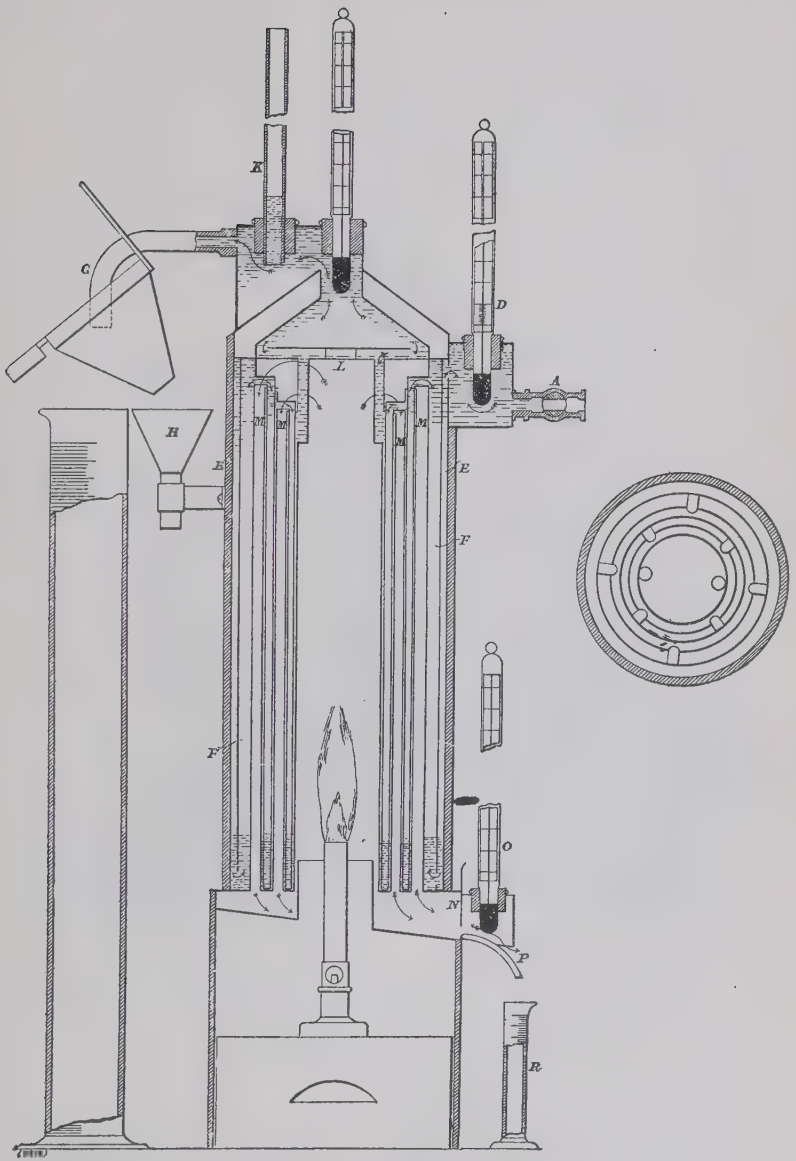

FIG. 4—SIMMANCE-ABADY CALORIMETER. SECTIONAL VIEWS.
APPENDIX E.

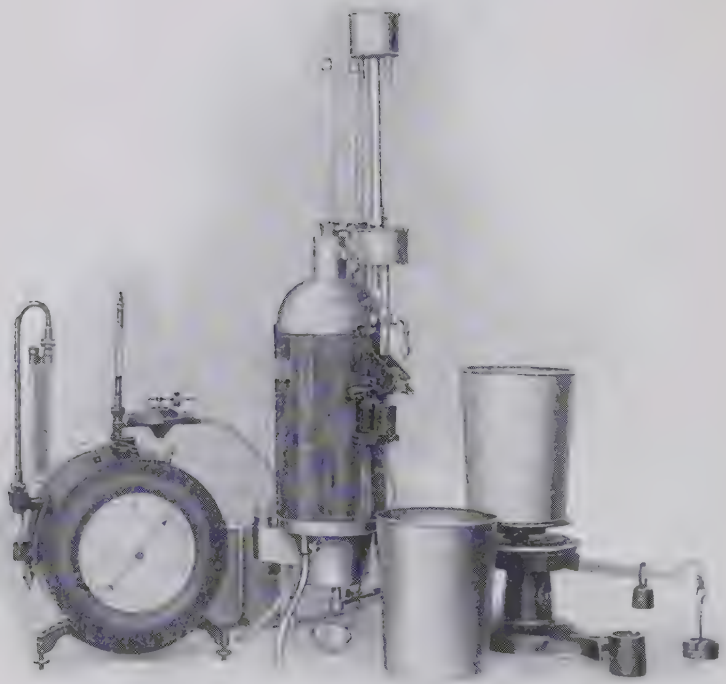

FIG. 5—THE FINAL SARGENT CALORIMETER, WITH ACCESSORIES.
APPENDIX E.

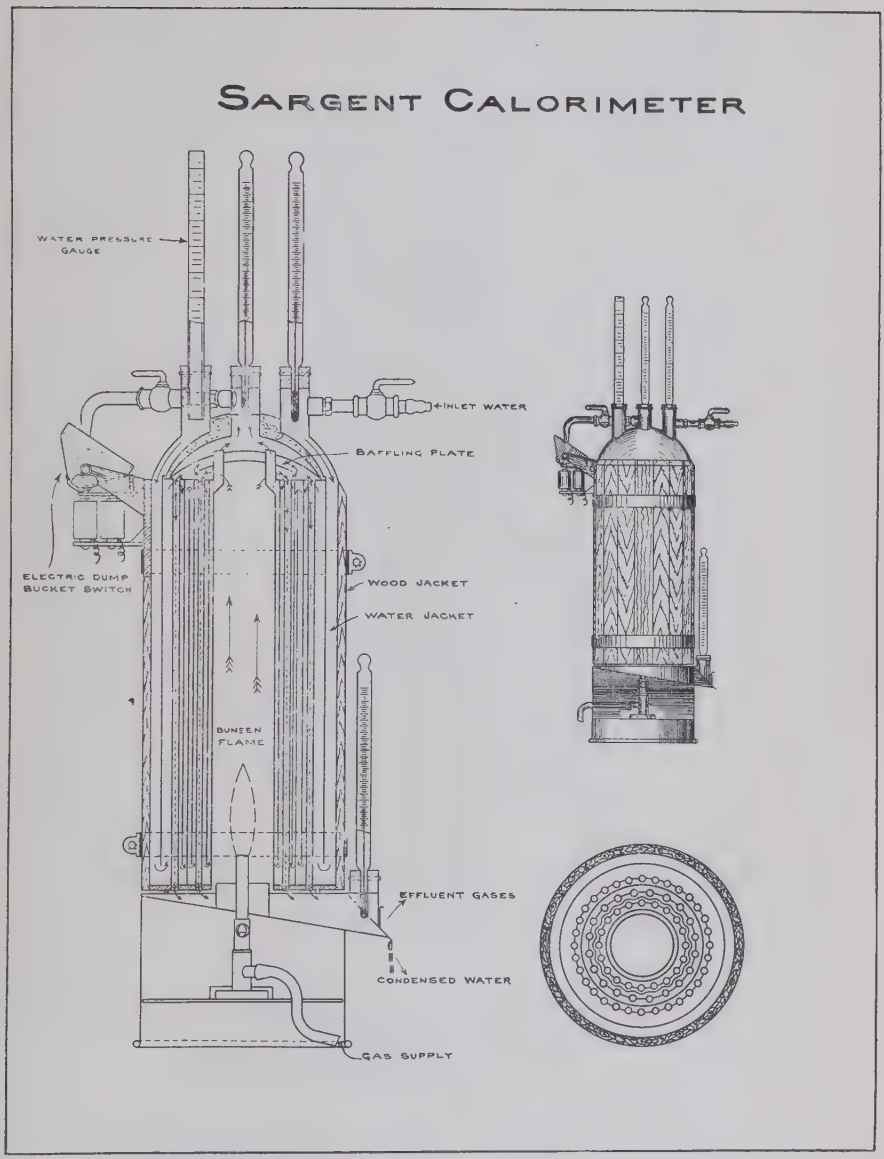

FIG. 6—FIRST SARGENT CALORIMETER. SECTIONAL VIEWS AND ELEVATION.
APPENDIX E.

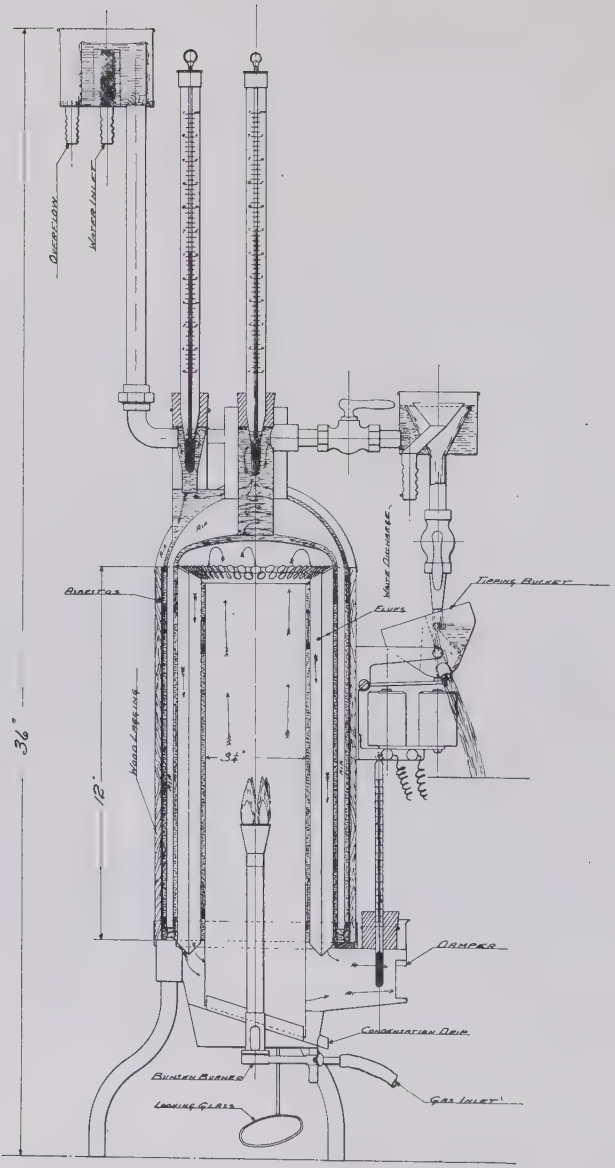

FIG. 7—THE FINAL SARGENT CALORIMETER. SECTIONAL VIEW.
APPENDIX E.

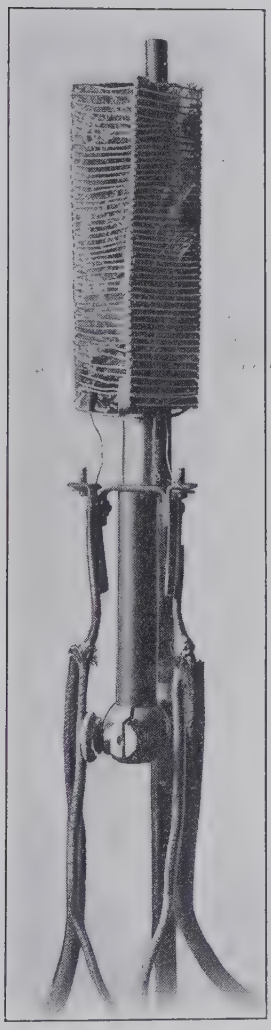

FIG. 8—ELECTRIC HEATER. USED IN EFFICIENCY TESTS.
APPENDIX E.

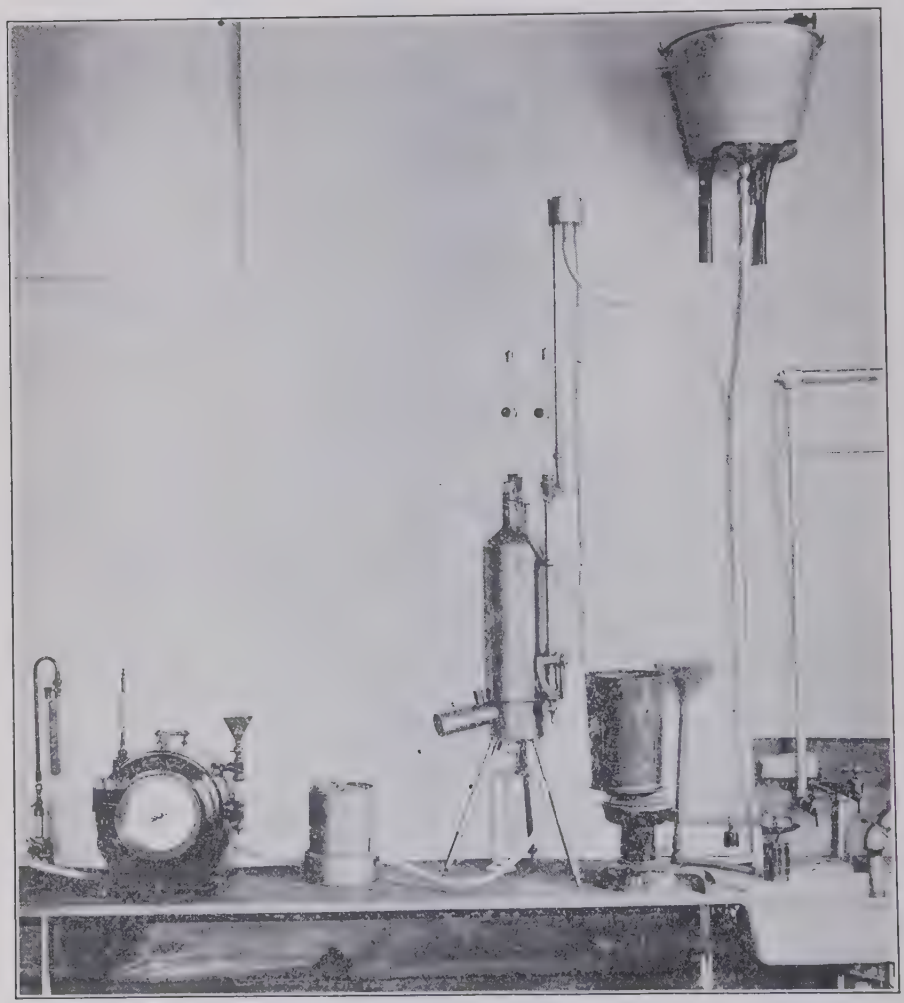

FIG. 9—GENERAL VIEW OF MODIFIED JUNKERS CALORIMETER, WITH ACCESSORIES. LABORATORY OF MILWAUKEE GAS LIGHT COMPANY. APPENDIX E.

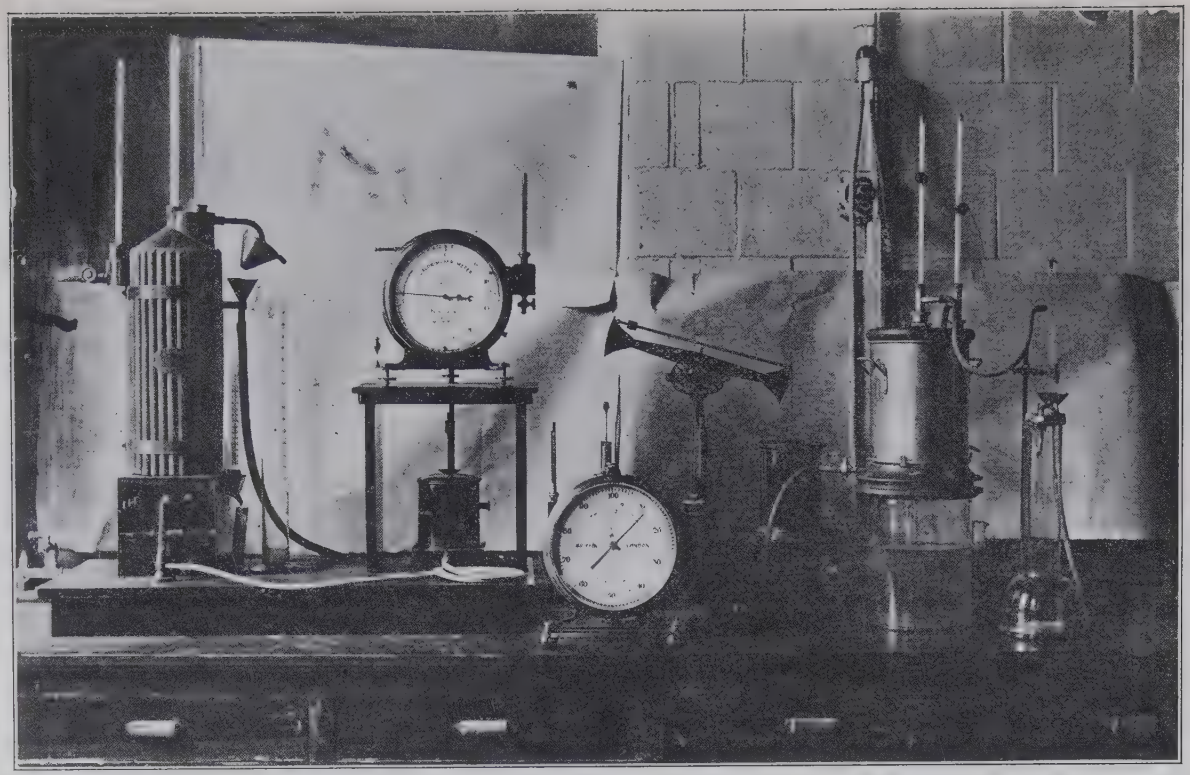

FIG. 10—APPENDIX E—GENERAL VIEW OF SIMMANCE-ABADY AND BOYS CALORIMETERS, WITH ACCESSORIES.

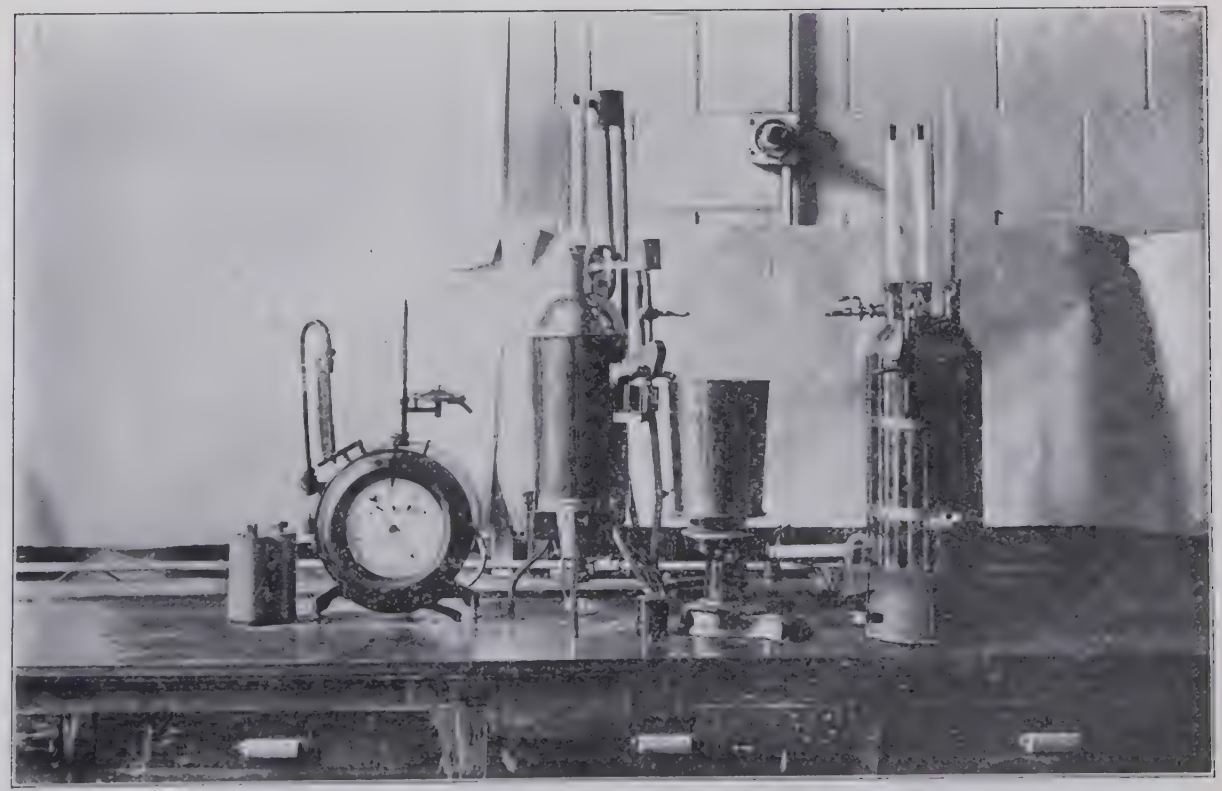

FIG. 11—APPENDIX E—GENERAL VIEW OF SARGENT CALORIMETERS, NEW AND OLD, WITH ACCESSORIES, SHOWING WATER WEIGHING APPARATUS.

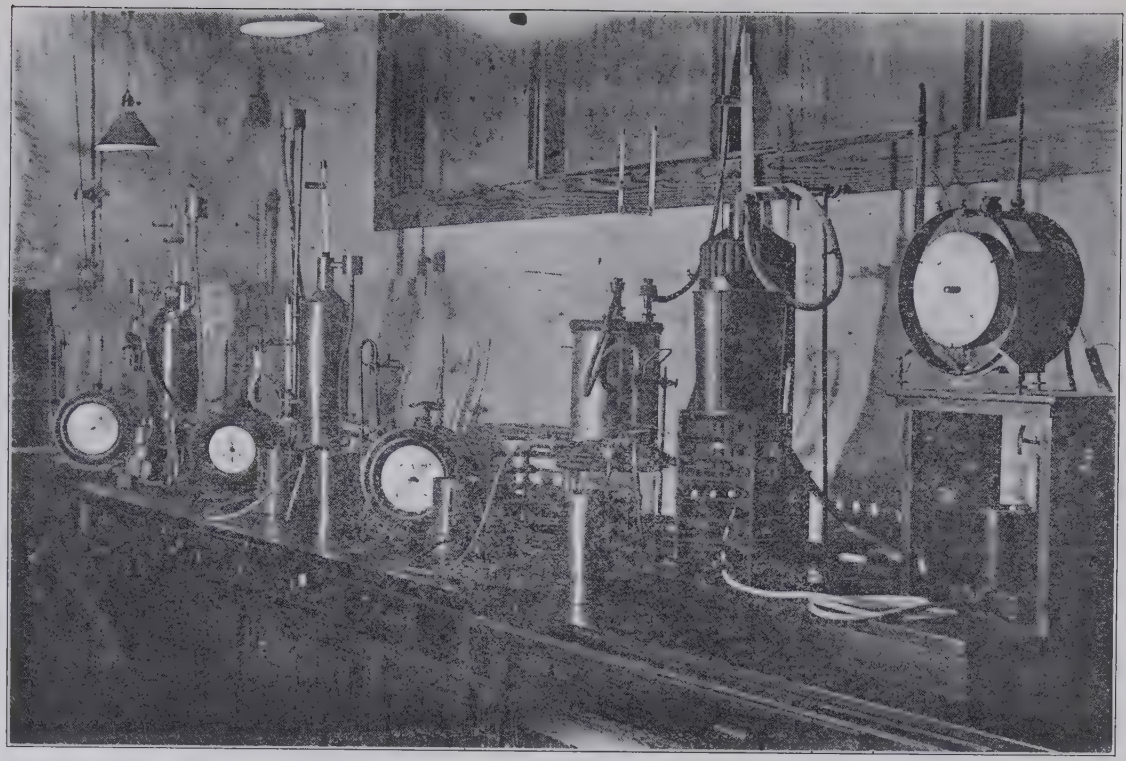

FIG. 12—APPENDIX E—GENERAL VIEW OF CALORIMETERS AS CONNECTED FOR COMPARATIVE TESTS AT LABORATORIES OF UNIVERSITY OF WISCONSIN.

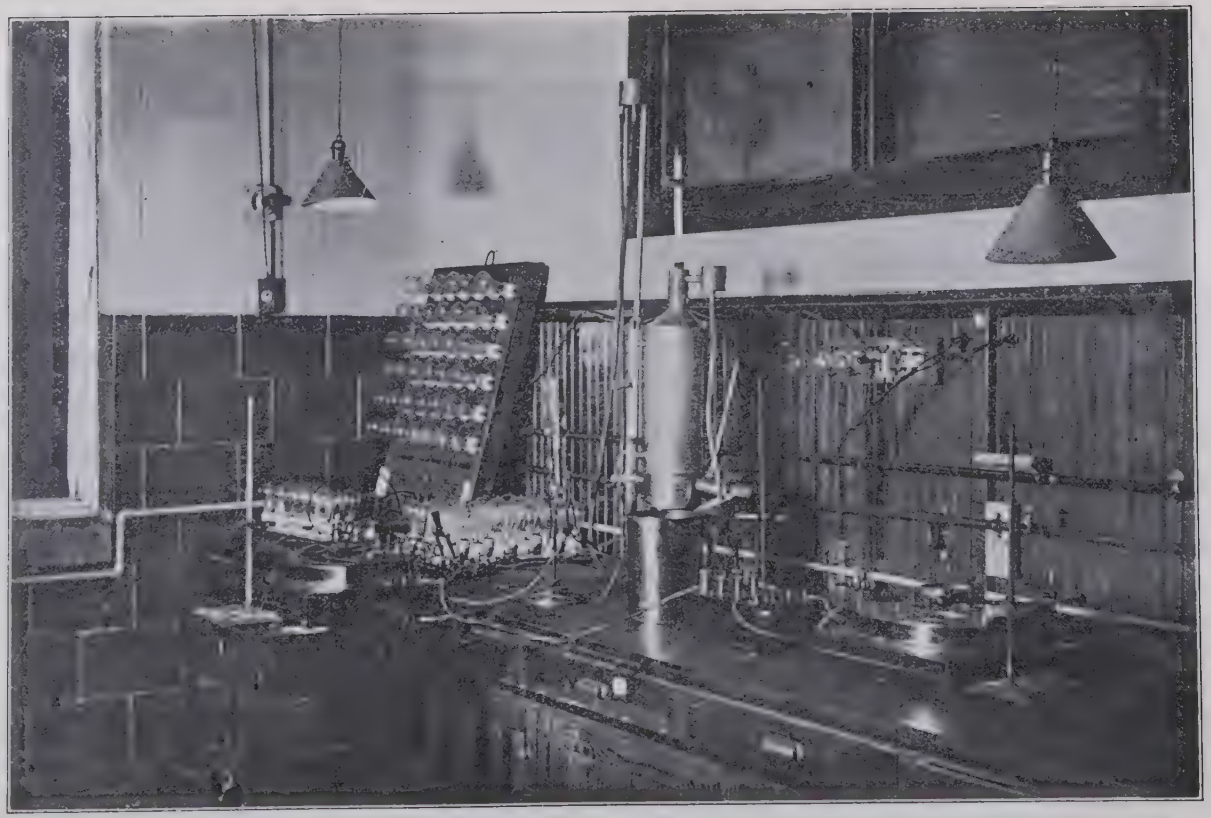

FIG. 13—APPENDIX E—JUNKERS CALORIMETER EQUIPPED WITH ELECTRIC HEATER FOR EFFICIENCY TESTS.

CORRECTION FA
TEMPERATURE AN

BAROM

TEMPERATURE	28.6	28 7	28.8	28.9	29.0	29.1	29.2	29.3	29.4	29.5	2
95	.857	.860	.863	.866	.870	.873	.876	.879	.882	.885	
94	.860	.863	.866	.869	.873	.876	.879	.882	.885	.888	
93	.863	.866	.869	.872	.876	.879	.883	.886	.889	.891	
92	.866	.869	.872	.875	.879	.882	.885	.889	.892	.894	
91	.869	.872	.875	.879	.882	.885	.889	.892	.895	.898	
90	.872	.875	.878	.881	.885	.888	.892	.895	.898	.901	
89	.875	.878	.882	.885	.889	.892	.895	.898	.901	.904	
88	.878	.881	.885	.888	.892	.895	.898	.901	.904	.907	
87	.881	.884	.888	.891	.895	.898	.901	.904	.907	.910	
86	.884	.887	.890	.894	.898	.901	.904	.907	.910	.913	
85	.887	.890	.893	.896	.900	.903	.906	.909	.913	.916	
84	.889	.893	.896	.899	.903	.906	.909	.912	.915	.919	
83	.892	.895	.899	.902	.906	.909	.912	.915	.918	.921	
82	.895	.898	.901	.905	.908	.911	.914	.918	.921	.924	
81	.898	.901	.905	.908	.911	.914	.917	.921	.924	.927	
80	.901	.904	.907	.910	.914	.917	.920	.923	.927	.930	
79	.904	.907	.910	.914	.917	.920	.923	.926	.930	.933	
78	.906	.909	.913	.916	.919	.923	.926	.929	.932	.936	
77	.909	.912	.915	.919	.922	.925	.928	.931	.935	.938	
76	.911	.915	.918	.921	.925	.928	.931	.935	.938	.941	
75	.914	.917	.921	.924	.928	.931	.934	.937	.940	.943	
74	.917	.920	.924	.927	.930	.933	.937	.940	.943	.947	
73	.920	.923	.926	.930	.933	.936	.940	.943	.946	.949	
72	.922	.925	.929	.932	.935	.939	.942	.945	.949	.952	
71	.925	.928	.931	.935	.938	.941	.945	.948	.951	.954	
70	.927	.931	.934	.937	.941	.944	.947	.950	.954	.957	
69	.930	.933	.937	.940	.944	.947	.950	.953	.957	.960	
68	.932	.936	.939	.942	.946	.949	.952	.956	.959	.962	
67	.935	.938	.942	.945	.949	.952	.955	.959	.962	.965	
66	.938	.941	.944	.948	.951	.954	.958	.961	.964	.968	
65	.941	.944	.947	.950	.954	.957	.960	.963	.967	.970	
64	.943	.946	.949	.953	.956	.959	.963	.966	.969	.973	
63	.945	.919	.952	.955	.959	.962	965	.969	.972	.975	
62	.947	.951	.954	.958	.961	.964	.968	.971	.975	.978	
61	.950	.954	.957	.961	.964	.967	.971	.974	.977	.981	
60	.952	.956	.959	.963	.966	.969	.973	.976	.980	.983	
59	.955	.959	.962	.966	.969	.972	.976	.979	.983	.986	
58	.957	.961	.964	.968	.971	.975	.978	.981	.985	.988	
57	.960	.963	.967	.970	.974	.977	.980	.984	.988	.991	
56	.962	.966	.969	.973	.976	.979	.982	.986	.990	.993	
55	.965	.968	.972	.975	.979	.982	.985	.989	.993	.996	
54	.967	.970	.974	.977	.981	.984	.988	.991	.995	.998	
53	.969	.973	.976	.980	.983	.986	.990	.993	.997	1.000	
52	.971	.975	.978	.982	.985	.989	.992	.996	.999	1.003	
51	974	.977	.981	.984	.988	.991	.995	.998	1.002	1.005	
50	.976	.980	.983	.987	.990	.994	.997	1.001	1.004	1.008	
49	.979	.982	.985	.989	.993	.996	1.000	1.003	1.007	1.010	
48	.981	.985	.988	.992	.995	.999	1.002	1.006	1.009	1.013	

Observed volume multiplied by factor corres
and barometric pressure equals co

Appendix E. Fig. 1

CTORS FOR
D PRESSURE

METER

29.6	29.7	29.8	29.9	30.0	30.1	30.2	30.3	30.4	30.5
.889	.892	.895	.898	.901	.904	.908	.911	.914	.918
.892	.895	.898	.901	.904	.907	.911	.914	.918	.921
.895	.898	.901	.904	.907	.910	.914	.918	.921	.924
.898	.902	.904	.907	.910	.914	.917	.921	.924	.928
.902	.905	.908	.911	.914	.917	.921	.924	.928	.931
.905	.908	.911	.914	.917	.920	.924	.927	.931	.934
.907	.910	.914	.917	.920	.923	.927	.931	.934	.937
.910	.913	.917	.920	.923	.926	.930	.934	.937	.940
.913	.916	.920	.923	.926	.929	.933	.937	.940	.943
.916	.919	.923	.926	.929	.932	.936	.940	.943	.946
.919	.922	.926	.929	.932	.936	.939	.943	.946	.949
.922	.925	.928	.932	.935	.939	.942	.946	.949	.952
.924	.928	.931	.935	.938	.942	.945	.949	.952	.955
.927	.931	.934	.937	.941	.945	.948	.951	.954	.958
.930	.934	.937	.940	.944	.948	.951	.954	.957	.960
.933	.937	.940	.943	.946	.950	.954	.957	.960	.963
.936	.939	.943	.946	.949	.953	.956	.960	.963	.967
.939	.942	.946	.949	.952	.956	.959	.962	.966	.969
.942	.945	.948	.951	.955	.958	.962	.965	.968	.972
.944	.948	.951	.954	.958	.961	.964	.968	.971	.975
.947	.950	.954	.957	.960	.963	.967	.971	.974	.978
.950	.953	.957	.960	.963	.966	.970	.973	.977	.980
.953	.956	.960	.963	.966	.969	.972	.976	.980	.983
.955	.959	.962	.965	.968	.972	.975	.979	.982	.986
.958	.961	.965	.968	.971	.975	.978	.981	.985	.989
.960	.964	.967	.970	.974	.977	.980	.984	.988	.991
.963	.967	.970	.973	.977	.980	.983	.987	.990	.994
.966	.969	.972	.976	.979	.983	.986	.989	.993	.997
.968	.972	.975	.979	.982	.985	.989	.992	.996	1.000
.971	.974	.978	.981	.985	.988	.992	.995	.998	1.002
.973	.977	.980	.984	.987	.991	.994	.997	1.001	1.005
.976	.980	.983	.986	.990	.994	.997	1.000	1.004	1.008
.979	.982	.985	.989	.993	.996	1.000	1.003	1.006	1.010
.981	.985	.988	.991	.995	.999	1.002	1.005	1.009	1.013
.984	.987	.991	.994	.998	1.001	1.005	1.008	1.011	1.015
.986	.990	.993	.997	1.000	1.004	1.007	1.010	1.014	1.017
.989	.992	.995	.999	1.003	1.006	1.010	1.013	1.016	1.020
.992	.995	.998	1.002	1.005	1.009	1.012	1.016	1.019	1.023
.994	.997	1.000	1.004	1.007	1.011	1.014	1.018	1.021	1.025
.996	1.000	1.003	1.007	1.010	1.014	1.017	1.021	1.024	1.028
.999	1.002	1.006	1.009	1.013	1.016	1.020	1.023	1.027	1.030
1.001	1.005	1.008	1.012	1.015	1.019	1.022	1.026	1.029	1.033
1.004	1.007	1.011	1.014	1.018	1.021	1.025	1.028	1.031	1.035
1.006	1.010	1.013	1.017	1.020	1.024	1.027	1.031	1.034	1.038
1.009	1.012	1.016	1.019	1.023	1.026	1.030	1.033	1.037	1.040
1.011	1.015	1.018	1.022	1.025	1.029	1.032	1.036	1.039	1.043
1.014	1.017	1.021	1.024	1.028	1.031	1.035	1.038	1.042	1.045
1.016	1.020	1.023	1.027	1.030	1.034	1.037	1.041	1.044	1.048

ponding to observed temperature
rrected volume.

.5.

CURVES SHOWING PERCENTAGE
FROM THE WET AND DRY BULB T

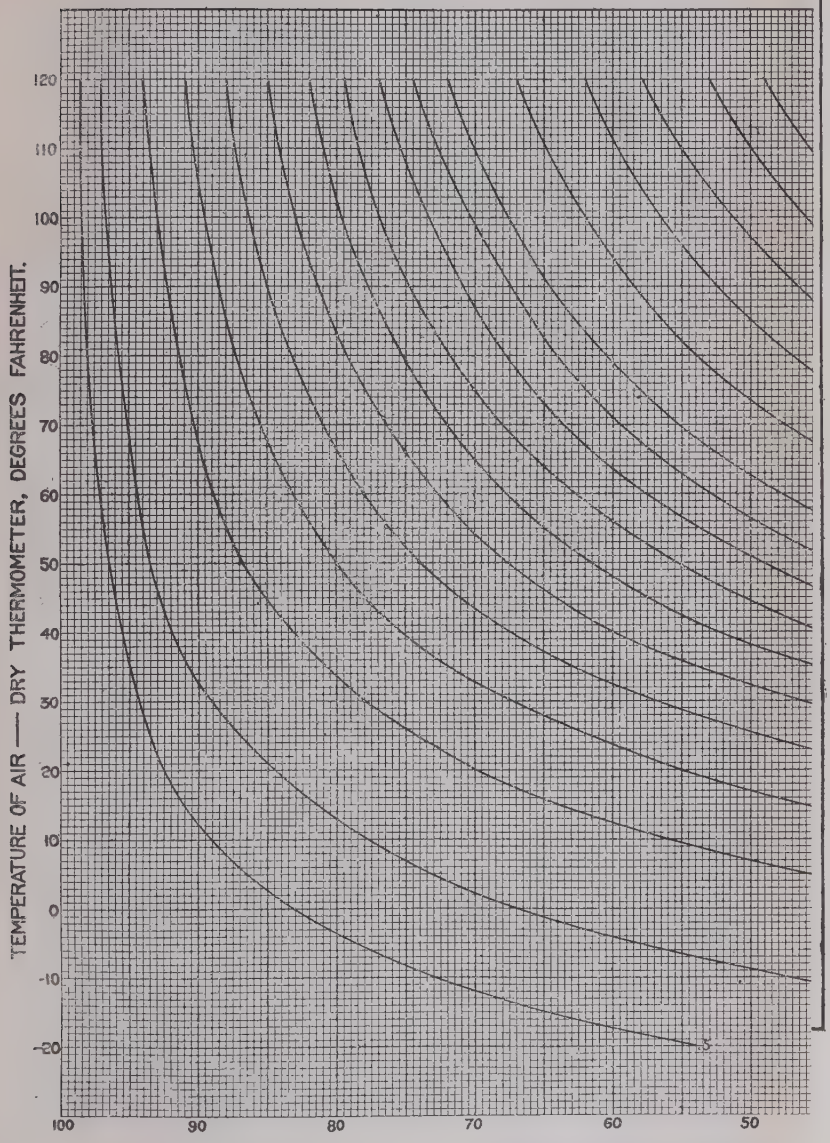

Appendix E. F

RELATIVE HUMIDITY,
THERMOMETER READINGS.

Fig. 16.

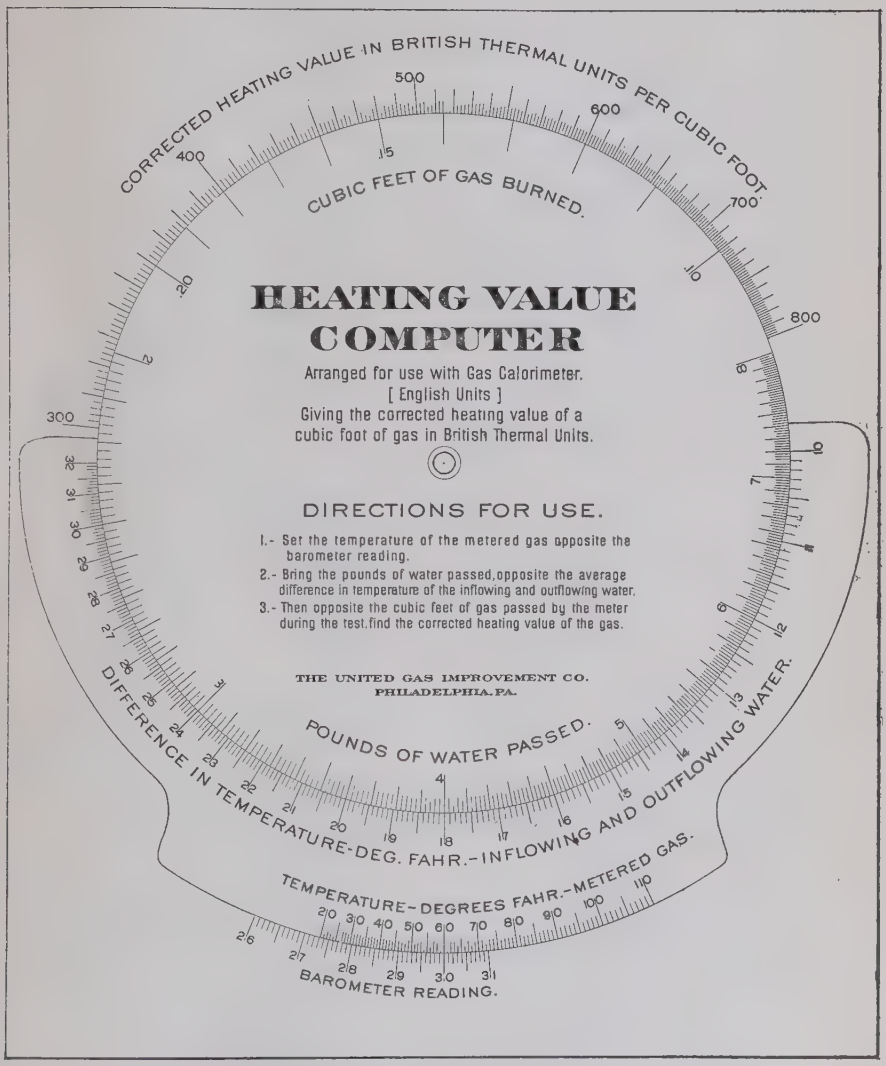
CORRECTED HEATING VALUE IN BRITISH THERMAL UNITS PER CUBIC FOOT.
CUBIC FEET OF GAS BURNED.
HEATING VALUE COMPUTER
Arranged for use with Gas Calorimeter.
[English Units]
Giving the corrected heating value of a cubic foot of gas in British Thermal Units.
DIRECTIONS FOR USE.
1.- Set the temperature of the metered gas opposite the barometer reading.
2.- Bring the pounds of water passed, opposite the average difference in temperature of the inflowing and outflowing water.
3.- Then opposite the cubic feet of gas passed by the meter during the test, find the corrected heating value of the gas.
THE UNITED GAS IMPROVEMENT CO.
PHILADELPHIA, PA.
POUNDS OF WATER PASSED.
DIFFERENCE IN TEMPERATURE-DEG. FAHR.-INFLOWING AND OUTFLOWING WATER.
TEMPERATURE-DEGREES FAHR.-METERED GAS.
BAROMETER READING.

FIG. 14—HEATING VALUE COMPUTER. FOR CALCULATING THE CORRECTED HEATING VALUE OF A GAS FROM CALORIMETER READINGS.
APPENDIX E.

APPENDIX F.

BIBLIOGRAPHY.

JOURNAL REFERENCES:

London Journal of Gas Lighting:

October 28, 1890 Page 894
The Thwaite Gas Calorimeter.

August 22, 1893 Page 355
Heating Value of Illuminating Gas, by B. H. Thwaite.

August 13, 1895 Page 334
Heating Value of Coal Gas, by David Vass.

June 23, 1903 Page 901
Paper on Calorimetry, by E. Fearson.

December 12, 1905 Page 746
The Giraud Verificateur.

December 19, 1905 Page 808
"A Gas Calorimeter" by C. V. Boys

July 3, 1906 Page 41
"A New Calorimeter Method," by M. Casaubon

July 10, 1906 Page 107
Raupp's Gas Calorimeter.

June 18, 1907 Page 817
Fery Electric Continuous No-Water Calorimeter.

Gas World:

May 5, 1900 Page 725
Calorific Power of Illuminating Gas, by H. G. Colman.

March 28, 1903 Page 512
April 4, 1903 Page 562
Calorimetry of Gaseous Fuels, by W. G. Wernham

June 24, 1905 Page 1179
Lecomte Calorimeter.

February 10, 1906 Page 285
Dr. Immenkotter on Junkers Calorimeter

August 18, 1906 Page 319
Raupp's Calorimeter

American Gas Light Journal:

December 1, 1902 Page 782
Hempel Calorimeter

Progressive Age:

April 15, 1907 Page 206
Sargent Calorimeter

Engineering:

May 3, 1895 Page 574
Junkers Calorimeter.

January 13, 1905 Page 66
Simmance-Abady Calorimeter.

July 12, 1907 Page 46
Beasley's Calorimeter.

Proceedings A. S. M. E.:

December 1900 Page 815
Testing Inflammable Gases, by C. E. Sargent

TEXTBOOKS:

Calorimetry	FRANK H. BATES
Calorimetry of Producer and Illuminating Gases	JOHN F. SIMMANCE
Calorific Value of Fuels	POOLE
Gas Works Chemistry	H. B. HARROP
Handbooks	

PATENTS.

No. of Patent	Title	Grantee	Date
555956	Calorimeter	Hugo Junkers	Mar. 10, 1896
723751	Apparatus for Indicating the Thermal Quality of Gases	Wilbur F. Steele	Mar. 24, 1903
808693	Calorimeter	Louis Schutte	Jan. 2, 1906
816042	Gas Calorimeter	Chas E. Sargent	Mar. 27, 1906
828306	Gas Calorimeter	H. L. Doherty	Aug. 14, 1906
832611	Process for Determining the Heating Power of Combustibles	Hugo Junkers	Oct. 9, 1906

I would say in closing, that the committee had access to a large number of Junkers' instruments during the progress of this work, and they have shown remarkable uniformity in their operations and results, and some of them which have been in use for a long term of years appeared to be in perfect condition. I have briefly mentioned the other instruments used, and later we will show you, upon the screen, sections of these instruments and Mr. Klumpp will call attention to the specific features.

THE PRESIDENT: Mr. Klumpp is going to describe some of the apparatus used.

MR. KLUMPP: Mr. President, as the time is short I will go over the description of the calorimeters rather briefly. First I want to refer to the curves again. On page 351 you will find a series of readings that show the constancy of the various instruments, which is of interest, and on pages 354 and 355 appear the capacity efficiency curves. These are readings on individual instruments and show how the efficiency of the calorimeters is affected by the capacity or the rate at which the gas is burned. The efficiency is lowest in burning small quantities of gas, when the quantity of air admitted is in excess, and all excess air tends to reduce the efficiency of the instrument. As we approach readings in the neighborhood of six and seven feet per hour we could control combustion, so that it was perfect and with the least amount of air, and it was within those limits that we decided the operating directions of the instrument were to be made. On page 356 is a curve that shows how closely the Junkers instrument approached 100 per cent. The Simmance-Abady in this test is above 100 per cent. Page 358 shows also how the Simmance-Abady in the gas test read above the Junkers. There were three additional curves that were made after the report was finished, and slides were made of them. In the Simmance-Abady test the original burner was so constructed that we could not get sufficient gas through it, so a Junkers burner was used and the rate of flow of water was then increased to overcome the defect Mr. Brown spoke of, and by that method as high as nine feet gas consump-

tion was obtained with the Simmance-Abady with fairly uniform readings; probably the general operating efficiency at five to seven feet was the best.

An efficiency test was also made of the Sargent calorimeter of the latest design which, from the rate of three feet to nine feet, showed a very uniform reading, with a maximum efficiency at about five or six feet.

(The curve referred to in the following paragraph is shown on page 357.)

This curve shows a test of a Sargent and Simmance-Abady with the electric heater; the Sargent ran 99 and a fraction per cent. and the Simmance-Abady averaged about 106 per cent. Figure 12, Appendix E, shows how the instruments were connected up at the University of Wisconsin Laboratory for testing. At the back of the instruments is the gas supply and water supply. The meters were all of the same type, reading tenths per cubic foot. The calorimeters were read simultaneously by four operators with the same gas and the same water at approximately the same time. These tests were all lettered the same, so that the letters A, B, C, D, etc., represent readings made at the same time with the same gas and the same water conditions. In all cases the water was weighed. In all cases wet governors were used. Temperatures were taken with Fahrenheit thermometers.

Now it would not be complete to pass calorimetry without referring to a new recording instrument invented by Hugo Junkers, a recording calorimeter which will give a chart of the continuous heating value of the gas. There are two things necessary in operating a recording calorimeter. One is to keep a constant ratio between the supply of water and the supply of gas; the other is to determine the difference in temperature of the water. If you have the quantity of water in exact relation to the quantity of gas, all that is necessary to determine is the rise of the temperature in this water. The calorific value of the gas is a function of these two factors. Junkers has designed a water meter and a gas meter connected by a chain so that the ratio of supply is constant. For instance, with a gas supply at the rate of four feet an hour; water about at rate of 150 lbs. per hour may be used,

and that is constant; the calorimeter proper is the Junkers design. There are two thermometers inserted so one can read the temperatures. There is also an electric couple or thermopile, giving directly the difference in the temperature of the inlet and outlet by denoting the voltage on a recording voltmeter. The recording voltmeter is calibrated to read B.t.u.'s direct. It is a very ingenious affair, and while it has only been on the market in Germany for a few months, we felt it was well to mention the fact and give the designer credit for it.

Mr. R. B. Brown: I should like to call the attention of the convention at this point to the fact that on page 375 you will find a note of a patent granted August 14, 1906, to Mr. Henry L. Doherty, in which the fixed relation of gas and water was provided for and the reading of the calorific value direct from the difference in temperature was incorporated. Of course we know very little about this Junkers' recording instrument, except from its commercial description and the photographs accompanying it. Mr. Klumpp has explained the system followed, but we should not forgot to accord to Mr. Doherty the credit of having devised an instrument embodying these principles several years ago. Unfortunately, for the reasons which I do not know, it has never been put upon the market.

Mr. Klumpp: You will notice on page 375 there is a patent of January 2, 1906, to Louis Schutte, for an instrument designed to record a constant ratio between the gas and water supply. There are a number of such instruments that are being developed now, although there are none that we know of on the market. Dr. Lucke, of Columbia College, has been working on a calorimeter. His design, however, holds a constant ratio of the gas and water, on the principle of projecting them through an orifice at constant pressure. I believe in the next two or three years we will see some very satisfactory calorimeters developed to give us recording readings on the heating value of gas.

THE PRESIDENT: Shall we hear from the third member of this committee, Prof. Burgess, of the Wisconsin University, one of our members? Are there any points that you would like to call special attention to, Professor? If so, we would be glad to hear them.

MR. C. F. BURGESS: Mr. President, if I may be permitted to speak, not as a member of this committee, but as a representative of the Engineering Department of the Railroad Commission of Wisconsin, I should like to relate some of our experience with calorimeters. It is something over a year ago that the Railroad Commission of Wisconsin, asked its Engineering Department to make recommendations as to methods of measuring gas service, and in the innocence of our ignorance in the matter we went to work at the problem and investigated the various methods in use for measuring gas service. Consideration was given to the candle power measurements and the calorific tests, and for various reasons, some of which may possibly be peculiar to the State of Wisconsin, it was decided that the calorimeter was the instrument which it was desired to use. A system of testing the service in various cities was inaugurated, using apparatus very similar to that which has been recommended by your committee. In taking these measurements, various observers were employed who had some training in the use of instruments; and calorimeters were set up under different conditions, though the attempt was made to approach those which were described to-day as nearly as possible. We feel, without having any absolute knowledge of the conditions, that a close approach to accuracy was attained, an accuracy near to that which is attained in the measuring of volumes of gases. The Railroad Commission has adopted no standard of calorimeter or method of operation, but I believe that they will favorably consider recommendations to be made to them which will be based upon the recommendations of this Institute. (Applause.)

THE PRESIDENT: Are there any others who want to speak on this subject? We shall have to move on to the next paper very rapidly.

MR. JOSEPH E. NUTE: The Graefe calorimeter introduced in Germany, costing only $25, is supposed to come within two per cent. of the Junkers, and the test can be made in five to ten minutes. I think for ordinary work it is the thing we are looking for. Dr. Summers here is well acquainted with it, and can give you the details if you care to go into it.

THE PRESIDENT: That will have to go over to the latter part of the meeting, as we have consumed too much time on this already.

MR. GEORGE H. WARING: On page 289 directions are given to determine the calorific value, the heating value of gas at 60 degrees Fahrenheit, and 30 inches of mercury; on page 290 the gas is supposed to be regulated at a uniform pressure, but on page 291 no account is taken of the correction for the pressure of the gas. A variation of two inches would probably make a difference of say four B.t.u.'s. That may not have been the intention of the committee, but it seems to me that point should be brought out. It has not been the custom to make corrections in the photometer, but it is not as significant as it would be in the calorimeter.

MR. CHARLES O. BOND: I believe Mr. Klumpp stated that the Boys calorimeter had no provision for constant head of water. It has one but it is movable and may be hung at any desired height. With the Junkers using the high position of the inlet water thermometer, it is claimed by Mr. Klumpp, you could make a possible error of a fraction of one per cent. That will be dependent upon whether the provision of the committee has been carried into effect, of maintaining the inlet water and the temperature of the room the same, for if their temperatures vary, then this possible error would become greater, there being a long space betwen the inlet thermometer and the entrance of the water into the calorimeter proper.

Another statement is that the thermometers recommended by the committee are to be calibrated from 68 to 110 degrees Fahrenheit, and that the difference of temperature between the inlet and outlet water be maintained at 15 degrees. Now

that will do if you can keep your room between 60 and 80 degrees, as has been suggested, but there will be many cities in the country where the temperature of the room will go above 90, possibly 95 on hot summer days; therefore you will have to make provision for a higher stem thermometer, because you must allow for some excess in temperature, in case of accidental overheating. I will say that 120 degrees would be better in that case for your outlet thermometer's high mark.

One of the photographs shows the detail of the application of the electric heater to the Junkers calorimeter in order to determine the efficiency of the calorimeter, and I noticed that there was quite a large bank of electric bulbs nearby. I would ask if those were glowing at the time the calorimeter was in action, and if so, could there be any possible influence by radiant heat there?

Another suggestion. Would it not be well for the committee to recommend a means of testing the meters for accuracy? That is almost as important as to have accurate thermometers. A meter can easily get out of order by incrustation or something of that sort, and a twelfth cubic foot bottle, or some such scheme should be provided.

Another point. It is not specified what water to use. I do not believe the committee recommends distilled water, and yet most of our data is built upon the assumption that distilled water is the kind that will be used in measuring the heat units. There will be instances in which the water supply is badly contaminated; it may be thick with mud or sediment. I do not know whether that would have any effect on its specific heat or not. Ought it not to be investigated?

Mr. John P. Kennedy: I want to ask a question, that is whether any provision has been thought of, or arranged, for cleansing the interior portion of the apparatus from scale and sediment, if necessary.

The President: Mr. Brown, will you close for your committee?

Mr. R. B. Brown: Most of the questions appear to be based on the assumption of absolute scientific accuracy, which we do not claim for commercial calorimetry. Mr. Waring,

I think it was, mentioned correction for gas pressure. Now a difference of two inches would be a difference of nearly four B.t.u.'s, it is true, but while we may not call attention to the fact we assumed that the gas would be measured at a pressure of about 25/10ths, and we always used a governor on the inlet connection to all our calorimeters, maintaining uniform pressure on the meter, That would probably do away with Mr. Waring's objection.

The range of the thermometers. That criticism is justified, for it is impossible to maintain uniform room temperatures, and undoubtedly there will be points where calorimeters are used where it will be necessary to change this range, but we were simply trying to recommend apparatus that would fit the average conditions, and we found by discussion of this matter with the thermometer manufacturers that it was difficult to get a tube long enough to increase the range (with the open graduations) that would be accurate; in fact the range called for seemed to be more than they wished to give us.

The testing of the meters, I think, is very carefully covered in the report. We used one-quarter cubic foot bottle, and corrected our meters before every test to a very close regulation, and it is necessary that some form of device for the testing of meters should be provided. That is one of the steps which the Technical Committee, or the Sub-Committee of the Technical Committee, will consider in the further consideration of the subject of calorimetry next year.

The water in commercial work. We considered that we should have a clean water. The difference between any ordinary water that would be found in commercial work and distilled water would be so small that in the matter of specific heat of the water we did not consider it would have to be corrected for. Of course water carrying mud would be unsatisfactory; it would be impracticable to use such water, for it would put the calorimeter out of business in a short time.

The question of scale we have not considered, because that is a very difficult thing to handle.

As Chairman of the Technical Committee I want to ask that any of you gentlemen who are interested in this subject will help us this coming year in a further consideration of the subject by sending in, in writing, any questions, or any statements, or any experience that you may have so that it may be considered by the sub-committee on the subject.

MR. HINMAN: Mr. President, I think the extra report on calorimetry should include some analyses of the gas and the heat units found from the test.

THE PRESIDENT: There is no action to be taken on this committee report, but I wish to say that I cannot refrain from laying special emphasis on the fact that this report is presented as the result of extended and careful work by skilled investigators, and that it means a great deal in a very few words. It means also that these men have sacrified a great deal of time during the year for the good of the Institute. It bears evidence of deep research that ought to be of very great advantage to this Institute, and to the gas men in general, not only in this country but abroad.

REPORT OF COMMITTEE ON DEFINITION OF HEATING VALUE.

THE PRESIDENT: Listen to the report of Mr. Clark, please.

MR. CLARK:

Your Committee on "Definition of Heating Value," respectfully report:

We recommend that the American Gas Institute adopt the following as the definition of "Heating Value of Gas:"

The heating value of a gas is the total heating effect produced by the complete combustion of a unit volume of the gas, measured at a temperature of 60 deg. F., and a pressure of 30 inches of mercury, with air of the same temperature and pressure, the products of combustion also being brought to this temperature.

In America the unit of volume is the cubic foot and we recommend that the heating value be stated in terms of British Thermal Units per cubic foot of gas.

HENRY L. DOHERTY,
CHAS. F. PRICHARD,
WALTON CLARK,
Chairman.

MR. DONALD MCDONALD, of Louisville, Ky.: I move that the report be received, and the recommendation of the committee be adopted by the Institute.

The motion was seconded, and carried.

REPORT OF THE COMMITTEE ON THE CHICAGO EXHIBITION.

THE PRESIDENT: We will now hear from Mr. Rice in regard to the Chicago Exhibition.

MR. RICE: (Reading.)

It gives me great pleasure, as a member of the Joint Committee on Arrangements for the Gas Appliance Exposition of the National Commercial Gas Association, to report that the plans for the Exposition, as outlined in the prospectus, which has already been sent out, are being carried out with the most thorough regard for detail.

Every endeavor is being made by the committee to make this Exposition worthy of the great industry which it represents, and every indication points to complete success.

As stated in the prospectus, it is intended in the allotment of space to favor applicants who may be members of the American Gas Institute, and the National Commercial Gas Association, and in order that the associate members of our Institute may secure the advantages, which will be an outgrowth of this endeavor, it is most respectfully urged that every member of the Institute who desires space, send in application at once. Another meeting of the Joint Committee will be held in Chicago on October 27th, for the purpose

of making the first allotment of space. It is, therefore, almost imperative that every applicant should have his application in the hands of the committee by Monday next. After that date it will be, of course, impossible to do otherwise than to give the best space available. The indications now are that there will be little or no space left on that date.

It is gratifying to be able to report a most determined and efficient activity on the part of every member of the Joint Committee, and that the Gas Appliance Exposition this year promises to eclipse anything of the kind previously undertaken.

I may add that the prospectus mentioned has been sent out to every one, as far as we know, and inasmuch as that prospectus gives all the details very thoroughly, I have omitted any mention of those details in this report. If there is any member of the association who has not received the prospectus, it can be obtained by writing to either Mr. John Clark, of Chicago, or myself.

THE PRESIDENT: Gentlemen, you have heard the report. As I understand, no action is required. You are no doubt gratified to hear the success that is promised. We will now hear Mr. Bond's paper on this subject.

MR. CHARLES O. BOND: (Reads report.)

SOME FURTHER REMARKS ON THE PHOTOMETRY OF GAS.

The Convention will appreciate the difficult task approached in endeavoring to comply with the request for "Further Remarks on the Photometry of Gas" when there is recalled to mind the full Report of the Committee one year ago; yet that report left a few questions open, and these are of such basic importance as should provoke general discussion at this meeting.

This paper may be divided under five headings:

(1) Suggestions for bettering conditions within the photometer room and for improving the accuracy of settings.

(2) Sampling the gas to be tested.

(3) The selection of suitable reference and working standards.

(4) A discussion of what should constitute a test burner.

(5) Speculative remarks as to the future of photometry in the gas industry, and of the relation which the American Gas Institute should bear to it.

(1) Suggestions for Bettering Conditions Within the Photometer Room and for Improving the Accuracy of Settings.

(a) In the scheme submitted by the Committee for securing adequate ventilation in the photometer room, it was shown that it would be necessary to move 36,900 cubic feet of fresh air through the room each hour in order that the CO_2 content (which served as a measure of the vitiation) should show no appreciable increase. In the case supposed there was one person, one pentane lamp and one gas flame, each discharging its products of combustion into the room, and these together comprised the sources of vitiation.

This seems a large volume of air to move, and raises the question whether in very cold weather it would be feasible to properly heat it before its admission to the room. It seemed that if a form of hood could be devised immediately over the two main sources of vitiation—the flames—it might be possible to conduct away their products at once without contamination of the body of air in the room; and yet to so proportion or control these hoods as to avoid any violent direct draught, which would make the flames unsteady.

The heated products of combustion over a flame rise vertically with great speed, and yet, because of the enormous difference in temperature between themselves and the immediately surrounding air, these upward streams remain comparatively small in diameter for a considerable height and cause but little disturbance beyond their circumferences. This

is especially true of a directed stream of hot gases such as comes from the pentane lamp cylindrical chimney, or from the chimney of an argand burner. It thus seemed easy to carry out the plan referred to above.

To prove the point, tests of the CO_2 content of a photometer room were first made over a period of 2 hours, when the room was ventilated by the ordinary method. In the centre of the ceiling was a wooden shaft extending three feet above the ceiling outside and having a sectional area of about 1.3 square feet. At one side of the room near the floor an inlet air hole of 1 square foot area was cut. After a sufficient number of tests had been made under this condition of ventilation to give satisfying data as to its efficiency, the other method was tried.

In this case a hole was cut in the ceiling directly above each flame, and through these holes sections of 6-in. stove pipe flue were lowered to different heights above the flames. The intention was to find such a position as seemed to convey away all the waste products without inducing a strong disturbing draught at the flame. Also, lateral openings were cut in the flues, just below the point where they were inserted into the ceiling, and the upper lip of these lateral openings was made to protrude over the lower lip in such a manner as to induce a slow draught inward as the hot gases rushed upwards inside the flue. This served the purpose of removing steadily the upper layer of air in the room, which, it was thought, would tend to neutralize the vitiating effect upon the air of the person in the room.

It was found that a satisfactory height for the bottom of these flues was 20 in. above the top of the pentane chimney and 20 in. above the open gas flame respectively. The doors and windows of the enveloping room were kept open so as to retain a pure air supply in the outer room, from which it found its way through the 1 square foot opening into the photometer room proper. In order to find if wind variations above the flues would cause induced draughts in such a way as to flicker

the flames, an electric fan was set up, blowing a stream of air rapidly across the tops of the flues without the effect feared.

The tabulated CO_2 results by the two methods are here shown:

Sample Test:

Waste Gases Removed by Direct Ascent.		Waste Gases Spent into Room.	
HOUR	CO_2	HOUR	CO_2
11.45 A. M. (Room closed)		2.10 P. M. (Room again closed)	
12.00 N.	.055	2.25 P. M.	.09
1.00 P. M.	.055	3.00 "	.135
1.30 "	.060	3.25 "	.16
1.45 " (Room opened)		4.30 "	.20
2.00 P. M.	.055		

The question may be asked, how in practice will the vitiated air be removed from the enveloping room, for if it is not thoroughly removed, it will to some extent move circuitously and be again drawn into the photometer room at the bottom? The remedy will lie in a still further extension of the vertical flue, through the roof to the outer air, where a cover must be provided for it to keep out the deposition from the atmosphere. But in this case the extension will not be of the 6 inch flue proper, but it will consist of a larger flue encircling it, and overlapping it for, say 3 inches, leaving a free annular space between the two. This will permit the hot spent gases to continue their vertical rise, and to induce still another flow inward of air through this annular space. It will serve another purpose, for if a violent wind does arise outside, tending to increase the draught up the flues, then there will be two openings in the flue above its bottom, serving to minimize the pull from the bottom of the flue, and to protect the flames from draught disturbances.

This would seem to prove that it is not necessary to move 36,900 cubic feet of air per hour as was contemplated by the Committee's Report.

(b) A simple check on the accuracy of a setting of the disc is possible where the Leeson Comparison disc is used. It will be found that there is a position to the right of the correct setting where the right hand star will practically disappear; and another to the left where the left hand star will disappear. If the scale reading on the reader's right be called r1, then the disc be reversed and the scale reading on the reader's left be called r2, while the correct average setting of the disc for an equal illumination of both sides of it be called r3, then it can be proved that $r3 = \sqrt{r1 \times r2}$. This applies to those photometers commonly used in gas photometry whose scales are so graduated as to show directly the ratio of one compared light in terms of the other.

The theory involved in this method may be found in various discussions of the Bunsen disc, a recent one being that given by Professor Stine in his book on "Photometrical Measurements."

This method enables a photometrist to check his setting by observation of a field different in appearance from that which the eye had grown accustomed to, and without change of his position. It is needless to say that the photometric scale should be invisible to the eye while the readings are being made, to avoid any possible departure from a strictly unbiassed setting. A small mirror may be conveniently arranged for reflecting light on the scale after each setting is made.

A fallacious belief exists with many people that in the use of the Bunsen or of the Leeson disc the right eye sees the right side of the disc and the left eye the left side of the disc simultaneously, and that judgment of the correct setting is made under this condition. It would be necessary to interpose a vertical plane surface between the lines of vision of the two eyes, with the edge of the surface close to the nose, or to train the eyes for vision at an infinite distance to accomplish this feat, unless lenses were interposed to artificially direct the rays as in a stereoscope.

As a matter of fact, the judgment is ordinarily reached by shifting the gaze of the focussed eyes rapidly from one star to another, the image of one persisting long enough to en-

able it to be compared with the image of the other. This action is made easier if the eye is not placed too close to the disc, but remains at such a distance, say 18 inches or 24 inches, as calls for a small angular movement of the eyeball in order to shift the gaze from one star to the other.

(c) The Committee's Report suggested that a source of error in setting the disc might be removed by taking readings both from the back and the front of the photometer table. We have tried this suggestion on a photometer in regular use, where gases of different illuminating powers were used. The results will be shown by these sample comparisons:

Candle Power observed on Bar.

Front.	Back.
21.60	21.60
12.30	12.30
22.90	22.70
14.70	14.70
22.00	21.80
23.30	23.50
15.20	15.00
22.60	22.60
23.90	23.70
15.60	15.60
22.80	22.60
24.20	24.00
16.00	15.80
22.60	22.60
24.00	23.90

These being results obtained separately by three readers. It would seem that the extra work involved by the suggestion is unnecessary.

(d) It is clear that if we wish an improvement in photometric methods and results throughout the country, we must place the photometrist himself somewhat higher in rank than he has been held.

(2) Sampling the Gas to be Tested.

The value of any analysis depends primarily upon whether or not the sample submitted for analysis be a true representative of the substance to be analyzed. Last year's Committee pointed out that once the sample of gas was withdrawn from its regular route, it must be protected from any conditions of temperature or contact which might influence its illuminating quality on its way to the photometer room, unless such influence was intentional as in the case where cooling coils are used. It remains to fix upon the proper place in the process of manufacture from which to draw the sample, and to discuss the best manner of obtaining a representative sample.

The question as to the "quantity" of gas manufactured is answered at the station meter, when it has reached its finished state and is ready for storage. And in accordance with usage in measuring gases, the volume there registered is corrected to 30 inches barometric pressure, and to 60 degrees F. temperature. It would seem that the determination of "quality" should be made at the same point; that is, at the outlet of the station meter, these two determinations to be used in calculating the manufacturing results of the Works. Unless the gas is subjected to a process for further enrichment, such as by benzol at the outlet of the holders, there seems to be little virtue in taking samples from any later place along the line of manufacture than the one suggested—at the outlet of the station meter.

An ideal sample would require the continuous passing of a small fixed percentage of the station metered gas to the photometer, where it would be continuously tested, and the average candle power for each hour credited to that hour. As no recording photometer of an accurate type has been devised, this becomes impossible; and even in the large works the candle power is rarely determined oftener than once per hour; yet it is possible for a considerable variation in candle power to occur in one hour, either in the manufacture of coal gas or of water gas, and this variation may be accidental or intentional. In order that these variations may all be included

in the hourly average of candle power, there remains but one way: to store samples of gas for the unit period, usually one hour, then photometer the stored sample, empty the holder, and begin the storing of the next sample. This method is in practice at the Beckton Works, near London, where about 60,000,000 cubic feet of gas per day is made. Mr. Grafton told me that the method worked admirably, his holders being completely saturated, and that he considered there was no loss in illuminating power from the hour's storage. The candle power results run more uniformly, as would be expected when the irregularities of operation are thus smoothed out in the holder. It is to be preferred to a mixing or so-called averaging tank of fixed dimensions, such as is sometimes used in this country, where the stream of gas passes continuously in, through and out, and in which the effect of one hour's make is still likely to be traceable in the next hour's.

These small holders at Beckton were of between five and ten cubic feet capacity, and each was provided with a trip valve, in case it rose too high. An inlet valve was set at a constant opening, and the outlet pipe was of large capacity for a quick discharge. An advantage of such a system is that no matter how long the time unit in manufacture may be, the correct sampling may continue until the unit has elapsed. In a small works, where a test light was used to indicate the approximate quality of the gas, and to give warning if any wide departure from satisfactory running was evident, the time unit could be extended to four hours; or, for that matter, to the end of each shift.

I recall an instance in which gas was sold and delivered from one company to another at varying rates of flow, so that equal photometric intervals would have been incorrect for determining the illuminating value. A small deep sealed wet meter was geared to the drum of the station meter, and the holder into which it discharged was so counterweighted as to throw but ½ inch pressure. In this way the small meter became a pump, and delivered to the sampling holder an exact proportion of the gas passing the station meter during whatever interval elapsed, usually 24 hours. The system

worked well and when the candle power of the stored sample was compared with the average of frequent photometric readings taken over the entire period of storing, remarkably close results were obtained.

Having collected a proper sample from the proper place in the system of manufacture, there still remains a variable which would prevent a just comparison between results obtained at different works, or even at the same works in different seasons. And that variable is the minimum temperature to which the test gas has been subjected. As the present endeavor is to put the photometry of gas upon a scientific basis, where just comparisons can be made, it would seem both desirable and necessary to secure control of this point of minimum temperature and eliminate it as a variable. There may be eminent examples to the contrary, as in the case of the Beckton Works, cited above, where the sampled gas on its way to the small storage holders is at one point exposed openly to atmospheric changes. While it cannot of a certainty be claimed that the sample in this instance is subjected to the identical temperature that the main body of the gas must meet on its way to the consumer, yet the tendency is in the same direction and the operation of the Works to meet the candle power requirements at City Testing Stations is thus, through its Works readings, automatically guarded against the variation in illuminating value, which might be expected through change of season or weather, after the gas leaves the station meters.

In such a case, however, it is evident that the best manufacturing results will be obtained in the most favorable weather, or in the most favorable climates. And this, as above stated, vitiates just comparisons.

If, on the other hand, minimum temperature control is had by means of cooling coils, the question then arises: "What temperature shall be selected as the normal for all comparisons?" Would not 60 degrees F. seem to be the desirable selection, thus making the correction for both quality and quantity conform to the same standard? In the process of manufacture it will usually be possible, summer or winter, to

preserve the gas at or above that temperature (60 degrees) throughout the system up to the meters. If the cooling coils be of the "down flow" type and are properly constructed, the presence of condensation in the drip pot at the bottom of the coil will be a clear indication that their purpose is met.

(3) The Selection of Suitable Reference and Working Standards.

In the Report of the Committee last year describing the different standards in current use, there seemed no doubt but that the Pentane Lamp came nearest to fulfilling the requirements of a reference standard for the photometry of gas. It is of the same color and order of intensity as gas flames; it is the equal of any flame standard in reproducibility; it is portable; it is easily operated; it has an international reputation, and has been the subject of international comparisons; it is, in the home of its origin, sanctioned as a legal multiple successor of the Parliamentary candle; it interposes no glass chimney between its light and the object illuminated.

The chief requisite of a reference standard is reproducibility. As indicating the closeness with which different lamps of English manufacture agree in this respect, I quote from the Report of the Director of the British National Physical Laboratory, Dr. Glazebrook, to the English Institute of Gas Engineers, which report was also used before the Zurich Commission in 1907. Speaking of their Laboratory's standard pentane lamp:

"This lamp, which in all its dimensions, agrees accurately with the specification and has passed the Gas Referees' examination, is used in the course of ordinary laboratory test work for the purpose of standardizing other pentane lamps which are sent from time to time to be tested. The comparisons during 1904 and 1905 between this standard and lamps from different makers are given below, for the purpose of showing the smallness of variation occurring in different lamps made to the same specification, and also to show that the pen-

tane lamp used for these comparisons may safely be taken as having a value of exactly 10 candles.

Pentane Lamp. C. P. when compared against National Physical Laboratory Standard Lamp.

A	9.96
B	10.00
C	9.98
D	9.98
E	10.05
F	10.00
G	10.00
Average	10.00"

"Lamps which adhere rigidly to specifications agree to a greater accuracy than this," is a later statement in the same report.

Our experience with the American made lamps has not shown them to be in such close agreement as to reproducibility, but these lamps have been altered in some respects from the English design. Still, no reason exists why an American lamp, once assigned a value, shall not continue to reproduce that value so assigned; and in so doing, constitute a very satisfactory reference standard. As reference standards will be expected to derive their values from the Bureau of Standards at Washington, it seems to me that this Institute should recommend the adoption of the Pentane Lamp, with a Bureau of standards valuation, as the best present reference standard for gas testing in this country.

It may be another question, however, to expect to secure the general adoption of the pentane lamp as a working standard, on account of the expense in fuel and the difficulty of its shipment, so that we should endeavor to find a cheaper standard for this purpose, bearing always in mind that it is necessary to furnish an independent fuel supply to it, and that it can be standardized as often as need be against the reference standard on hand, and that the variation in its value from atmospheric causes should be the same as with the gas flame.

Such a successful working standard is the Edgerton Standard when its gas is stored in a saturated holder and maintained at approximately a uniform temperature. The holder should have a capacity of about 50 cu. ft. and the inlet and outlet pipes should be large enough for rapid filling or emptying of it. The holder being filled, the Edgerton standard is lighted and after the proper interval in which to become heated, it is given a value for that gas only by comparison with a pentane lamp. The pentane lamp is then removed and the gas test flame swung into its place. This puts into practice the "substitution method" recommended by the Committee last year. The Edgerton need not be burned at full height between readings, thus economizing the stored gas. If the holder itself cannot be maintained at an even temperature during the use of the gas stored in it, a cooling coil at its outlet may be resorted to, with a very exact temperature control. Without such a coil, however, and where a holder and photometer were in the same room, we have found the light from the Edgerton to decrease but ½ per cent. in 24 hours, when using coal gas stored in a 120 cu. ft. holder, said holder having a bell tank to insure the minimum of water to be saturated.

No reference has been made to the candle, either as a reference or a working standard.

(4) The Standard Test Burner.

Having discussed Light Standards, what shall we now say of the other end of the Photometer?

In the list of questions sent out last year by the Committee to the larger gas companies of America was one asking what test burner was in use. Now a prime object of such meetings as these is to compare results, and to select the methods which have produced the best results; and one factor in these "results" is a photometric factor. In American photometry here are the various burners through which these results were obtained: 6 feet E. H., 7 feet E. H., 8 feet E. H., 7 feet L. P. Bray, 8 feet H. P. Bray, 8 feet L. P. Union Jet Bray, Laubach & Hilpert E. H. No. 5 Union Jet Bray, 6 feet L. P. Bray Special, 6 feet Sugg Table Top; and among the Argands,

Sugg D old, Sugg D new, Sugg F, Sugg E and Metropolitan No. 2.

In the gas business we thus have definite proof that this is a free country and that the field for individual initiative has been little restricted. It is quite certain that between the worst and the best of the burners mentioned, there is a difference in efficiency of twenty per cent. This chaotic condition with regard to a standard burner through which to test gas is quite in keeping with the retention of the old candle for a standard light.

The question arises, how are we to bring order out of this chaos? It certainly is time to start about it, for it is a condition we have been cognizant of for years. There are those who think the idea of fixing upon uniform rules for the photometry of gas at this late day is rather amusing, for the reason that one state, Wisconsin, has already graduated from its use. But such a view is hasty. There are many existing contracts on a candle power basis to be finished; many more will be made. But as to the photometric methods under which they are to be conducted, it certainly falls within the scope of an Institute like this to have a large part in determining.

In the President's address of last year, we find such thoughts as these: "To so conduct the affairs of the Institute that it shall be, and be recognized as being, the authority in the United States on all questions relating to the manufacture, distribution and utilization of gas, ——— including the relations between gas companies and the city and state." And further, "It is possible, by the exercise of care and deliberation, to so place this Institute that it will be universally recognized as an authority to which appeals may be made with confidence that scientific accuracy and perfect justice will characterize its decisions." —— "There can be no doubt that the American Gas Institute is the natural body for such recognition, which we can and must arrange to deserve and to secure." I think that at the time this sentiment was expressed every member felt an "Amen." I think the members of the Institute continue to feel that sentiment. We are thus

impelled to the hope that this Institute in furtherance of the thought expressed in the President's address, will publish a set of Rules on Photometry of Gas.

When such a set of Rules is made, it will be necessary to mention a standard test burner. New York State would have thanked the American Gas Institute last year if there had been on record somewhere its convictions as to test burners. However, what has been done, has been done; it should be our care to look out for the future. Let us, therefore, reason a bit over this subject of the test burner.

When Murdoch got his first consumer, that consumer probably was rather nervous about letting what was considered a poisonous, ill-smelling, bottled explosive into his house. But he knew what he wanted, and he saw that he got it, and he was willing to pay for it. And what he paid for was, in his mind, not gas—it was illumination! The demand for the product has been such that in serving all our customers we may have slighted the fact that what we really sold was illumination—a satisfying of a certain sense-craving. Yet the ill-defined intention in the past has been right along to sell our product on this illumination basis, and that is why candle power has been specified in all contracts. It is to be noted that any one of the burners we use in this country to-day is considerably more efficient than the one Murdoch used. Had Murdoch discovered in his day a form of the Metropolitan No. 2, that is to say, a high efficiency burner for self-luminous flames, then during all these years candle power would have been based on such burners as test burners, without doubt. Now that the day has arrived when we do have a self-luminous burner, constructed on scientific principles, such as the Carpenter burner, the logical action of this Institute in specifying a test burner will be to go at least so far as to designate such a type; not as a final action, but as the best which is now in sight; for the principle involved is, that in testing for illuminating power, the gas is entitled to the burner of the self-luminous type (as distinguished from the incandescent type), best suited to the gas and used in the way most favor-

able for the gas, provided the burner shall be one which consumers may obtain and use if they wish.

It is not at all certain that the best type of such a burner has been devised, even now. When the total energy supplied to such a burner is compared with the proportion of it reappearing as light, we see at once how pitifully inefficient is even the best of them.

The scientific study of the Argand has resulted in achieving a complete combustion of the gas under more favorable circumstances. It has done away with the wasteful excess of air, and the useless heating of unsought nitrogen.

The position is exactly analogous to that in which we now find ourselves with regard to heating value. If a gas company is to be put upon a calorific basis for testing its gases, will it be satisfied to see the determinations made upon any instrument which does not, in a proper way, drain the last heat unit from the sample submitted? Why do we not specify for the testing of calorific value, the form of water heater in common use, costing about $7? Do we expect the consumer to purchase a Junker calorimeter for something over $200, upon which to heat his shaving water in the morning? Certainly not. Scientific tests are made with scientific instruments. The Junker Calorimeter is a scientific instrument, and because we know from computation just what the heating value of a gas should be, we are able to rate its efficiency.

The Carpenter burner is also a scientific instrument, but unfortunately no man has computed just what amount of light is due from a given expenditure of energy in the form of gas, and consequently we are not able as yet to rate the efficiency of this burner. Shall we, for this reason, refuse to use it, and hold instead to the open flame burner—the twin sister of the $7 water heater? That would be preposterous.

It is stated by authorities on the subject that the Metropolitan No. 2 burner, commonly known as the Carpenter, is suited for testing gases up to 20 candles. It is not improbable that a burner suitable for the testing of carburetted water gases of a higher illuminating value would be somewhat differently

proportioned in its air supplies. Indeed, there is a burner on the market which differs from the Metropolitan No. 2 in having one shutter which regulates the supply of air both to the exterior and to the interior of the flame, and whose fixed apertures are of such dimension as to give higher values for the richer gases than does the No. 2. This burner is called the Parliamentary, and was devised by Mr. Walter Grafton.

So long as contracts for the supply of gas are to be based on candle power requirements, in which there is a tacit understanding that horizontal candle power is meant, it would seem that in prescribing a uniform test burner, the type just mentioned should be specified. There should be tests made to find if a burner is not possible in which both air supplies are capable of such regulation as would for the type of burner specified, give a maximum efficiency for the usual range of illuminating gases.

(5) The Future of Photometry as Applied to Gas in America.

America is the land of raw materials, wasted by-products, and therefore of opportunity. Numerous are the fortunes which have been built upon the utilization of what was formerly wasted.

If it is wrong to waste a certain percentage of such raw materials as can be reproduced, as in the case of agricultural products, it would then seem to be positively criminal to waste those stored raw materials which cannot be reproduced, such as coal.

If coal is a natural resource, then so is the gas that results from coal. And if one foot of gas properly utilized will produce a certain effect, is there not a guilty waste when five feet are spent in producing it?

The effect we have in mind is illuminative effect. In the future we shall not ask to look directly at a light source and measure its initial rays; we shall ask that those rays fall upon certain objects first, and then come reflected from those objects, to our eyes. If the reflected light is sufficient the objects are illuminated properly, and this shall be our inquiry.

It is not the naked sunlight we let fall upon our printed page, much less do we measure its direct rays. It is the northern exposure we seek and the diffused rays that filter down upon our page are quite sufficient for our purpose. To that extraordinary fifth sense—our sight—less light would be starvation, and more light would be stupefaction; so that as time goes on the keen competition will be to produce the uniform diffused north light in an artificial way—in the truest sense to attempt in our homes and buildings to turn night into day, insofar as we need more day to accomplish our several tasks. This presupposes at once a system of indirect lighting, and that means that much of our photometry will become illuminometry.

Once a beginning is made in measuring illumination—the effect—and not the candle power, the cause—we shall fall away from all quarrels as to whether a light from gas is given through a flat flame, an Argand or a mantle burner. We shall adopt the burner and the method which, while giving complete satisfaction to the consumer, shall be most economical to us. This at present points to the use of mantle burners and indicates the first conservation of our energy.

Two thoughts follow the above conclusion, and indicate the direction our investigations should take in the lighting field of the gas industry. (1) We should study the placing and the directing of our lighting energy in order to produce a required illumination at the least cost. This is illuminating engineering. (2) We should study the quality and form of mantles; and the conforming of mantle shapes to flame shapes. And here we find a continued use for our elderly handmaiden, photometry. In this connection it is pertinent to remark that the Zürich Commission, referred to earlier, is not simply a photometric commission, but it is an Incandescent Photometric Commission.

Should not we, as a Gas Institute, have a Committee working along these lines of investigation, as is done in foreign countries? And should not we now make sure that we have representatives at the next International Commission meeting

in Zürich, July, 1910, charged with bringing home to this Institute the beneficial results of their contact and exchange of thought with the best men in Europe on these subjects?

When we look at the Proceedings of this Institute for the years 1906 and 1907 and listen to the Report of the Technical Committee, dealing with the Unit of Light at this current meeting, we realize that in matters photometric we have not remained still. Progress has been made. There comes to mind, also, the very able paper presented by a visitor, Mr. V. R. Lansingh, at the Chicago Convention, in which he suggested a line of action for the Institute in the matter of Standardization of Incandescent Mantles. Unfortunately, at the time the Institute was not prepared to act. It was, of course, necessary to put ourselves on record in things primary and fundamental before starting upon the more complex questions suggested above.

When shall we take them up?

THE PRESIDENT: Now, gentlemen, as it is more than ever necessary to save time—though not to cut short the discussion—I think we may, perhaps, arrive at the same result in a shorter time by having the next two papers read now, and then discussing them all together, as necessarily the discussions will have to overlap. Therefore, we will call for the

REPORT OF THE COMMITTEE ON UNIT OF LIGHT.

W. H. GARTLEY, *Chairman.*

MR. GARTLEY: (Reads report.)

REPORT OF SUB-COMMITTEE OF THE TECHNICAL COMMITTEE

on result of joint conference with Committees of the American Institute of Electrical Engineers and Illuminating Engineering Society.

ON UNIT OF LIGHT.

Cause of Appointment of Committee:

At the 1907 meeting of this Institute a communication was presented by Dr. E. P. Hyde and Mr. J. B. Klumpp of the Illuminating Engineering Society on the subject of a conference between Societies interested in illumination in this country, looking to an agreement on the value of the unit of light.

That communication is to be found on pages 529 to 532, Proceedings of the American Gas Institute for 1907. Briefly, it stated that while both the electric and gas interests in this country have adopted the British Parliamentary candle as a unit, each of the gas and electric interests has obtained the value of the candle in a different way and through different channels, and the values so obtained appear to differ from each other by about 4%. In the photometry of gas the English precedents have been followed, while in the photometry of electric lamps the value of the English candle is expressed in terms of the Hefner. It was stated that this condition of having two units of different values in active use in the same country was unfortunate and extremely disadvantageous to the better interests of either industry, and that with the establishment of State Commissions having supervision of supplies of gas and electricity, which will look more and more to the Federal Bureau of Standards for standards of candle power, complications will certainly result if the unit recognized in any industry is not in agreement with that maintained at the Bureau of Standards; and it is obviously impossible for the Federal Government to maintain and legalize two different units for use in the photometry of gas and electric lamps.

The said communication stated that, with the exception of Germany, the outlook for an international value of the unit of

light was bright, because the units of England, France and the United States were nearly enough alike in value to give rise to the hope that a compromise might be reached. It finally requested the Gas Institute, and stated that a similar request was being made to the American Institute of Electrical Engineers, to appoint a sub-committee to meet a sub-committee of the Illuminating Engineering Society to consider means looking to the adoption of an international unit of light.

This invitation was referred to the Technical Committee, which appointed a sub-committee to meet similar sub-committees representing the American Institute of Electrical Engineers and the Illuminating Engineering Society. The membership of these sub-committees was as follows:

American Institute of Electrical Engineers:

Dr. Samuel Sheldon,
Polytechnic Institute,
Brooklyn, N. Y.
Dr. Charles P. Steinmetz,
Union College and General Electric Company.
Dr. A. E. Kennelly,
Harvard University.
Dr. S. W. Stratton,
Director National Bureau of Standards,
Washington, D. C.

Illuminating Engineering Society:

Dr. Louis Bell,
President of Illuminating Engineering Society.
Dr. E. P. Hyde,
Asst. Physicist, National Bureau of Standards.
Dr. Clayton Sharp,
Ex-President of Illuminating Engineering Society.
Mr. J. B. Klumpp,
Inspecting Engineer, The United Gas Improvement Co.

American Gas Institute:

W. H. Gartley,
A. E. Forstall,
Charles O. Bond,
Dr. A. H. Elliott.

At a final meeting of this conference, held in New York, February 14th, 1908, the following Resolutions were adopted:

Statement and Resolutions adopted by the Joint Committee, composed of sub-committees of the American Institute of Electrical Engineers, the American Gas Institute and the Illuminating Engineering Society, at a session held in New York, February 14, 1908.

The Joint Committee, composed of sub-committees of the American Institute of Electrical Engineers, the American Gas Institute and the Illuminating Engineering Society, recognizes that although the differences among the units of candle power in use in the United States at the present time are not greater than a few per cent, nevertheless, in view of the increasing accuracy that is being demanded in industrial photometry, there is a growing need of a common unit of candle power which shall be established and maintained at the United States Bureau of Standards at Washington, D. C., and in terms of which secondary and working standards for use in the photometry of all kinds of illuminants can be measured. The Committee further realizes the importance and desirability of international agreement upon a common international unit of luminous intensity to be used throughout the civilized world. It so happens that the common unit which would be adopted in the United States, as a compromise between the candle units used in the photometry of gas and electric lights, would approximate very closely to the mean value of the candle units maintained at the national laboratories of the United States, England and France. The unit of light maintained at the national laboratory in Germany (the Hefner) differs from the candle units maintained at the national laboratories of the other three countries by so great an amount that no benefit would accrue, either to Germany or to the other countries, by including the Hefner in taking the mean of the various units.

And whereas the three sub-committees in joint conference deem that the above statements embody the concensus of opinion of said committees, therefore, be it

Resolved—(1) That the joint Committee, composed of

sub-committees of the American Institute of Electrical Engineers, the American Gas Institute and the Illuminating Engineering Society, approves the adoption of a common national candle unit which shall be maintained at the United States Bureau of Standards, and in terms of which secondary and working standards for use in the various industries can be standardized, and recommends to each of the three Societies here represented through the respective sub-committees the adoption of such a plan.

Resolved—(2) That this Committee will support the Bureau of Standards in any action which it may take to bring about international agreement upon a common candle unit, and will recommend to each of the three Societies here represented the endorsement of such action, provided the unit agreed upon shall represent approximately the average value of the candle units maintained at present at the national laboratories of the United States, England and France, or specifically that it shall be lower than the unit at present maintained at the Bureau of Standards at Washington, D. C., by an amount not less than one (1) per cent., nor more than three (3) per cent., the exact value to be agreed upon as the result of an international conference.

Resolved—(3) That inasmuch as the adoption at this time of a definite value for the common national candle unit for the United States would embarrass the Bureau of Standards in bringing about international action, this Committee refrains at this time from recommending the adoption of a definite value for the common national candle unit, but recommends, in the interest of the various industries involved, that during the interval required for the consummation of international action a common candle unit be used which shall be two (2) per cent. less than that now maintained at the Bureau of Standards, since there can be no doubt but that such a candle unit would differ by less than one (1) per cent. from the proposed international candle; and further resolved that the Secretary of this Joint Committee is instructed, after the concurrence of the three Societies here represented, to address a letter to the Director of the Bureau of Standards enclosing a copy of these

resolutions, and requesting that the Bureau of Standards, which has taken the initiative in the present movement toward a common national and international candle unit, maintain as its working candle from this time on, until definite international action shall have been taken, a candle unit of two (2) per cent. lower than that which it is maintaining at the present time.

Resolved—(4) That this committee recommends that each Society here represented, acting through its own proper channels, shall address to such similar foreign societies as may be interested a statement of the movement in the United States toward a common international candle unit (enclosing a copy of these resolutions), and shall request the co-operation of the said foreign societies in advancing the movement.

National Units of Light:

In presenting these resolutions, which have been approved by the Board of Directors of this Institute, your committee believe it important, if not necessary, that a short review of the situation should be presented to assist you in arriving at an intelligent understanding of the subject before voting.

At the present time the German nation has adopted as a unit of light, that emitted from the Hefner lamp when burned in a pure atmosphere containing 8.8 litres of water vapor per cubic metre of dry air at 760 mm. barometric pressure, the quantity of water vapor to be determined by an Assmann Psychrometer; this unit they call the "Hefner Kerze" to distinguish it from the English standard candle. It is also known as the "Hefner Unit" or plain "Hefner." The standard lamp of Germany is situated in the Imperial Physicalische Techniche Reichsanstalt at Charlottenburg.

The English nation has, through its scientific bodies, declared that the unit of light is the English standard candle and they have defined the value of that unit to be one-tenth the intensity of a Harcourt pentane lamp, when that lamp is burned properly in a pure atmosphere containing 10 litres of water vapor per cubic metre, as determined by a plain wet and dry bulb hygrometer. The standard lamp of Great Britain is

situated in the British National Physical Laboratory at Teddington, near London.

The French scientific bodies have declared the unit of light for France to be the light of the Carcel lamp; light intensity was expressed in Carcels. In 1889 the Bougie decimal candle obtained a position of authority in France. The Bougie decimal is the name given to one-twentieth the Violle platinum standard.

The Bureau of Standards, a bureau of the Department of Commerce and Labor of this country, charged with the custody of the general standards adopted by Congress, among which are weights and measures, in 1903 declared that the unit of light for this country shall be the English standard candle, and they defined its intensity as 100/88 of the Hefner unit.

This definition of the value of the unit by the Bureau of Standards has been accepted by the American Institute of Electrical Engineers. The Standardization Committee, whose action is final for the Electrical Institute, have adopted the following standardization rule:

"Section 11. PHOTOMETRY AND LAMPS.

Rule 142. 1. The luminous intensity of sources of light is expressed in candle power. The unit of candle power should be derived from the standards maintained by the National Bureau of Standards at Washington, D. C., which standard unit of candle power equals 100/88 of the Hefner unit under Reichsanstalt standard conditions for the Hefner. In practical measurements, seasoned and carefully standardized incandescent lamps are more reliable and accurate than the primary standards."

To-day and for five years past any standard lamp or electric lamp sent to the Bureau of Standards for certification as to its value has had that value expressed in terms of this unit, that is, in standard candles bearing a relation to the Hefner of 100/88.

THE RELATION OF THE VARIOUS NATIONAL UNITS TO EACH OTHER:

Naturally the fixing upon this relation by comparing the representative standards of each country against the others has occupied the attention of photometrists. In England, Germany, France and the United States there are laboratories having in their custody standard lamps and electric lamps evaluated thereto. The effort culminated at the Gas Congress at the Paris Exposition, in 1900, in the formation of a committee known as the International Incandescent Photometric Commission. One of the important duties of this Commission was to fix upon a relation between the various standard lamps of the different countries. This Commission published in its convention at Zurich, in July, 1907, the following ratios adopted by them, it being understood that the normal water vapor content of the atmosphere in which the lamp was burned for the Carcel and the Harcourt pentane lamp should be 10 litres per cubic metre of pure dry air, as determined by the Assman Psychrometer, and for the Hefner 8.8 litres of water vapor per cubic metre of pure dry air as determined by the Assman Psychrometer.

Carcel.....10.75 Hefners.
Harcourt.....10.95 Hefners.
Harcourt..... 1.020 Carcels.

(Probable error within 1%.)

These values are the results of comparisons made by the members of the Commission of standard lamps against each other and of the values of lamps conveyed in electric bulbs from one country to another. This Commission's report did not meet with acceptance by the Electrical Institute because it was regarded as representing exclusively determinations made by the gas interests. In other words, this Commission stated that one-tenth of the Harcourt pentane lamp had a value of 1.095 × the Hefner lamp, or, conversely, that the Hefner lamp was equal to .913 × the tenth part of the Harcourt pentane lamp.

We have, then, these two values of the English standard

candle: first, that of the Bureau of Standards, that it is equal to 100/88 of the Hefner lamp, or conversely the Hefner equals .88 candles; second, that of the International Incandescent Photometric Commission that the value of the candle being 1/10 of the Harcourt pentane lamp is equal to 100/91.3 of the Hefner, or conversely the Hefner equals .913 candles. The difference is approximately 4% and is the difference alluded to in the letter of the Illuminating Engineering Society given above. This is the difference that it was proposed that the joint Committee should consider and if possible eliminate by mutual concessions so that they could put the Bureau of Standards in a position to meet the representatives of the foreign countries in an international conference on this subject, with the knowledge that the American Societies and Institutes representing the entire illuminating industry of the country were in agreement as to the value that should be given to the unit of light.

The call for this joint conference does not allude to the adoption of a new temporary standard to be adopted by this country to which all the lighting Societies will agree, and which will be in the custody of the National Bureau of Standards pending the final adoption of the international unit when decided on. But since the conference, in determining its position as to the international unit, agreed that the value should be reduced not less than one per cent. nor more than three per cent. below the value now held by the Bureau of Standards and adopted by the American Institute of Electrical Engineers, it was thought best to adopt a temporary national unit of two per cent. less than the present Bureau of Standard unit. If all the Societies interested adopt this value, we are sure that the final international value cannot cause a change of more than one per cent., a practically negligible quantity, and we have secured a unit that meanwhile is to be accepted everywhere in this country.

The present unit of the Bureau of Standards is based on having a value of 100/88 = 1.136 Hefner. A reduction of 2% would give a value of 1.113 Hefners.

How will this value compare with the value promulgated

by the International Incandescent Photometric Commission? This is important because the Photometric Commission's value is one that was first announced by the British National Physical Laboratory as the English value. This Commission did not directly take any position regarding the value of the candle. They were not appointed for that purpose. Their duty, among others, was to fix on a relation of the values of the Hefner and Harcourt lamps. In doing this they accepted the relative values first announced by Mr. Paterson of the British National Physical Laboratory that the Harcourt pentane lamp was equal to $100/91.3 = 10.95$ times the value of the Hefner and, since the London Gas Referees have announced that the English candle is one-tenth of the Harcourt lamp, it logically follows that this International Commission endorsed the value of the English candle as being 1.095 Hefners when each lamp was burned under certain atmospheric conditions. In other words, the sequence here is that the London Gas Referees first stated that the English candle, unit of light, had a value of one-tenth of the Harcourt pentane lamp. The International Commission then gave the value of the Harcourt pentane lamp against the Hefner, and in doing this they gave their authority to the value determined by the British National Physical Laboratory. Thus the International Commission gave an international value by which the English candle could be expressed in terms of the Hefner unit. That value is the one adopted by the British National Physical Laboratory. It is the English estimate of the relative values of the candle and the Hefner.

The comparison then of the new value in this country with this English value of the candle would then be as 1.11 to 1.095. This apparent discrepancy can now be explained.

Before going into an examination of this difference, it would be well to show why it is desirable that there should be no difference between a value of the unit to be adopted by this country and the value now held in England.

The Gas Companies of this Country Have Always Adhered to the English Value.

The duty of fixing on and maintaining the value of the

English standard candle, sometimes called the Parliamentary candle, has been given by Parliament, for many years, to the Gas Referees of London, and to them only. It does not appear that the Referees at any time regarded themselves as the custodian of the unit for gas companies in general or for any purpose except for their own use in examining the quality of the gas distributed in the city of London, but, as they were the only authority having legal standing, their rulings were accepted by all gas companies in English speaking countries; and that such should have remained true for thirty years, without noticeable exception, is a sufficient testimonial to the scientific attainments and careful management of the gentlemen whose names are found in the list of Gas Referees of the City of London.

Having authority of Parliament, the Gas Referees first announced in 1860 the adoption of the unit as the light emitted by a candle weighing six to the pound and burning 120 grains of sperm per hour. That value stood alone until Herr Liebenthal of the Reichsanstalt announced his findings of the relative value of the English standard candle against the Hefner, in 1893.

During those years the gas companies of the United States, without exception, accepted the findings of the Gas Referees. The Gas Referees never stated that a sperm candle weighing six to the pound, burning 120 grains of sperm per hour, could be manufactured, each of which would give a light equal to the candle unit. They did state that if a package of sperm candles, weighing six to the pound, was presented to them, they might take from that package one or more samples and test them, and if those samples so tested gave a light whose value was equal to their standard candle, they would certify that that package of candles could be used in officially testing the gas sent out by the London Gas Companies under their supervision. It is true that they went one step further in suggesting specifications by which candles might be made that would prove of standard value, but no candle was a standard candle unless certified by them after testing a sample from the same package.

In 1897 the position of the Gas Referees, in regard to the use of the candle as a standard, was found by them to be untenable, and they stopped using candles in their official tests and stopped certifying to the value of any candles. For many years (prior to 1897) Mr. Harcourt, one of the Gas Referees, had been conducting experiments looking to the substitution of a light in place of the standard candle, that was less variable, and this lamp was known as the pentane air gas flame. In this the pentane and air were mixed in definite quantities in a small holder and burned through a ¼ in. orifice preserving a constant flame height, and this lamp had been so developed as to give a more constant light than candles, and had, for several years prior to 1897, been in use in standardizing packets of candles, so that its ability to reproduce the unit of light was, in the minds of the Gas Referees, unquestioned. Although the substitution of this pentane air gas flame never appeared in a documentary way as being accepted officially by the Gas Referees, yet the fact that it was used by them for official testing purposes, such as testing of candles, constituted in itself an adoption.

In 1897 the Gas Referees did officially adopt the present form of the Harcourt pentane lamp. Its value was determined by comparison with the pentane air gas flame. It was stated to be of a value equal to ten Parliamentary candles. In 1903, six years after its adoption by the Gas Referees, and after a large number had been certified by them or their Secretary, for use in other places, they presented one lamp to the British National Physical Laboratory with the certification that it was of ten candle value; and this lamp is the one that will be referred to as the representative Harcourt pentane lamp, and upon a study of which the relation of the Harcourt pentane lamp to the Hefner lamp was reached by the International Incandescent Photometric Commission and by other investigators. This lamp was made by Chance Brothers of London, and is known as the "Chance No. 100 Lamp."

The gas companies of this country followed the path laid out by the Gas Referees and, having had experience in the vagaries of the individual candles still sent out from the manu-

facturers in England as British Parliamentary candles, began, in 1898, to adopt the pentane lamp as a more reproducible standard. (A reproducible lamp is a type of which each individual lamp will produce a light of the same value.)

In 1899 at least one municipal inspector of gas in this country had adopted it as a working standard. In 1907 the pentane lamp was in wide use among the gas companies of this country.

From this history it will be seen that the gas companies of the United States have been consistent in their adherence to the oldest and highest authority on this subject.

Short History of the Hefner Lamp.

Before turning to a consideration of the relative values of the pentane and Hefner lamps, let us have a short history of the Hefner lamp. The lamp is of German origin, invented by Hefner von Altenack. The lamp was carefully studied by the Reichsanstalt and perfected by them, and a lamp so perfected has been kept in the Reichsanstalt and bears the same relation to all Hefner lamps that the Chance No. 100 Lamp, at the British National Physical Laboratory, bears to all pentane lamps—that is, it is the representative lamp used in obtaining relative values against other standards. It predates, in its position as the representative Hefner lamp, the Chance No. 100 Lamp by about ten years, and it is of this Hefner lamp that the English standard candle is claimed by the Reichsanstalt, the American Bureau of Standards and the American Institute of Electrical Engineers to be 100/88 of the Hefner lamp. The Reichsanstalt will certify that any Hefner lamp is of equal value to the standard Hefner lamp if comparison shows it to be within 2% of that value, permitting a difference of as much as 4% among those Hefners which the Reichsanstalt will certify as being of 1 Hefner value.

The Difference between the New American Value and the English Value Explained.

As previously stated, the new American value appears to bear a relation to the English value as of 1.113 to 1.095, but

this difference is very much reduced when a condition, that amounted practically to an oversight, was eliminated from the report of the International Commission at its Zurich Convention in 1907.

The International Commission gave the relative value of these lamps when each was burned in an atmosphere containing ten litres of water per cubic metre of pure dry air as determined by the Assman Psychrometer. The Gas Referees have used as a normal atmosphere, in which their lamp gave ten candle value, one containing ten litres of water per cubic metre of pure dry air as determined by the wet and dry bulb hygrometer.

Quoting from Mr. Paterson's report to the International Incandescent Photometric Commission at Zurich:

> "Ten litres per cubic metre is the mean humidity observed at the Metropolitan office in Victoria street, London, and at the National Physical Laboratories department at Kew."—*Journal of Gas Lighting*, July 23rd, 1907, page 232.

These ten litres were determined by the wet and dry bulb hygrometer.

Assman Psychrometer versus the Wet and Dry Bulb Hygrometer.

The terms psychrometer and hygrometer mean essentially the same thing. Both determine the dewpoint of an atmosphere and furnish data from which the quantity of aqueous vapor in an atmosphere can be determined.

The Assman Psychrometer differs from the Wet and Dry Bulb Hygrometer in results as a measure of humidity. In each case wet and dry bulb thermometers are used, but with the Assman Psychrometer the air is drawn over the bulbs at a constant velocity by a small fan operated by clock work situated above the thermometers. The two types are on exhibition. As the rate of evaporation and consequently the cooling effect is a function of velocity with which the air passes over the wet bulb, it is clear that that wet bulb, having air moving over it at a certain speed, will, unless that air be entirely

saturated with moisture, evaporate the water more rapidly than where the wet bulb is simply exposed to the air without motion. For this reason the Assman Psychrometer will evaporate the water on the wet bulb faster, hence cool it more and hence cause a given atmosphere to appear to be drier than a plain wet and dry bulb hygrometer will show it to be in a quiet room such as a photometer room must be. Experiments conducted in this country indicate that where a wet and dry bulb hygrometer will show ten litres of water per cubic metre, the Assman Psychrometer will show somewhat less than this. The formula for the correction of the effect of water vapor in the atmosphere supporting combustion of a pentane lamp is: Candle Power equals 10 plus 0.066 (10—e) where e equals litres of water vapor per cubic metre of pure air.

That is, for each 1½ litres of water vapor increase there would be a loss of 1% illuminating value in the pentane lamp. The experiments showing the relative readings of an atmosphere as determined by the Assman Psychrometer and the wet and dry bulb hygrometer have not proceeded far enough to state definitely just what correction should be applied to the Zurich Commission's determinations of the Harcourt pentane lamp in terms of the Hefner, the Assman Psychrometer not having been in our possession long enough to permit us to take advantage of a sufficient range of atmospheric humidities. Enough has been done to lead to the belief that with this correction applied, the Zurich Commission's relation will be reduced from .913 to about .90.

This relation has been corroborated by Director Glazebrook of the British National Physical Laboratory, who has published an article which appeared in the September 15th issue of the *Journal of Gas Lighting*, page 713, in which he states: that according to the Assman instrument recommended at Zurich, which may probably be taken as giving the more nearly correct result, the moisture actually present is only 8 litres per cubic metre when an unventilated wet and dry bulb instrument makes it 10 litres. If we stipulate that e in Mr. Paterson's formula is to be measured by the Assman instrument, it becomes:

Candle Power equals 10 plus 0.066 (8—e).

Further, in this article Dr. Glazebrook quotes a letter from Professor Boys, one of the Gas Referees, written to him, and saying:

> "My colleagues agree that the degree of humidity represented by 8 litres of water vapor in a cubic metre of air as measured by the Assman apparatus—seeing that it is commonly met with in this country—is one which may be properly taken as standard; and they recognize the advantage in international purposes of the very simple relationships of the three primary standards which follow from the selection of this degree of humidity."

Again quoting Dr. Glazebrook:

> "If we accept the readings of the Assman Hygrometer, and treat 8 litres as the standard conditions for the pentane lamp then
>
> $$\frac{\text{Hefner candle at 8.8 litres}}{\text{Pentane candle at 8 litres}} = 0.903$$ "

If such should be realized, the English value of the candle would be 100/90 or 1.111 Hefners, and hence it would agree within a fraction of 1%, if not exactly, with the proposed new unit. In other words, the gas companies of the United States, having followed the Gas Referees, would find themselves able to accept the proposed new standard of this country without making any change whatever. Practically this appears to be true; the change agreed upon by the joint Committee appears to be that in making this a 2% reduction the Institute of Electrical Engineers have abandoned their former value of the unit and adopted a new unit coinciding with the value then held by the gas companies.

We have so far dwelt upon the meaning to the gas companies of the adoption of the new unit by showing its reference to existing units through their mutual relations to the Hefner. This has been the manner adopted by the physicists representing the various countries, but you will note that the proposed resolution makes no mention of any flame standard.

It simply states that the present unit is to be reduced 2%. The present unit is now carried in an electric incandescent lamp by the Bureau of Standards in Washington, the same as the value of the English unit is carried in an electric incandescent lamp in the British National Physical Laboratory and the value of the Hefner is carried in an electric lamp at the Reichsanstalt. The National Laboratories declare that seasoned incandescent electric lamps can be maintained so as to give light that will not vary more than one-half of 1% for at least 200 hours. Under careful regulation these lamps can be extinguished and relighted at will without changing their intensity. Each National Laboratory has such lamps calibrated in terms of their National unit. Representatives of each laboratory have had opportunities of comparing the values of their units through these lamps with the units in the National Laboratories of other countries, and representatives of the American Bureau of Standards have, at various times in the last three years, carried these standard electric lamps to the National Physical Laboratory of England and compared the value of the American unit with the English unit.

Dr. E. P. Hyde of the Bureau of Standards published in 1907 the result of his observations made in this way. (See Reprint No. 50—Bureau of Standards.) He found the English unit to be 0.984 × the American unit. Dr. Rosa, Physicist of the Bureau of Standards, again made this comparison this year and found the English unit to equal .985 × the American unit. If, therefore, the American unit is reduced 2%—that is, if the proposed American unit be made 0.98 of the present unit—it will be seen that the new American unit will coincide with the English within less than one-half of 1% less than the English unit.

Hence it appears that both from a somewhat theoretical comparison and from a practical test of actually comparing the unit of this country against that of England, we find that the proposed new unit should cause no change in the photometrical work of those gas companies of America that have followed in the footsteps of the Gas Referees of London in adopting the pentane lamp as of 10 candle value; and here

the report of the Committee, we had hoped, could be ended by the introduction of a motion that the Institute adopt the resolution of the joint Committee. That resolution has been adopted both by the Institute of Electrical Engineers and by the Illuminating Engineering Society; but, unfortunately, one more test is requisite before your committee feel secure enough in their position to ask you to take final action.

We have stated above that in all measurements of the Harcourt pentane lamp against the Hefner, and in the comparison of the present American unit against the English unit, the Harcourt pentane lamp at the British National Physical Laboratory was taken as of 10 candles value, when burned in the prescribed atmosphere. That lamp was obtained from the London Gas Referees. The pentane lamps in this country were either certified to as of 10 candles value by the Secretary of the Gas Referees, or had values given them by comparison against lamps so certified. It only remained to ascertain if lamps sent to this country so certified did actually have the same value as the Chance No. 100 Lamp at the British National Physical Laboratory. To ascertain this, we sent a pentane lamp bearing Secretary Butterfield's certificate to the Bureau of Standards at Washington last May to determine its value when compared against the primary incandescent electric standards which had been sent to England and there compared against the Chance No. 100 Lamp.

It being necessary to have this comparison made in Washington in a normal atmosphere, we are informed by the Bureau of Standards that atmospheric conditions in their location during the last five months have been so far removed from normal that they are not now ready to put a value on this lamp.

The constitution of the Institute provides that the adoption of such a resolution must be by vote of the Institute after having the approval of the Board of Directors, but the Institute may by vote delegate its power to a special committee to take final action on behalf of the Institute. In view of the fact that the adoption of this unit now waits only on the action of this Institute, and that we are now returning to

weather of more nearly normal humidity, so that we will not have long to wait for the report of the Bureau on our pentane lamp, it is particularly desirable that we should not have final action postponed for another year until the Institute meets again. I hope that such a committee will be appointed.

With this end in view, after conferring with a representative of the Bureau of Standards, the following letter was sent to Dr. S. W. Stratton, Director of the Bureau:

"Philadelphia, October 2, 1908.

Dr. S. W. Stratton, Director,
Bureau of Standards,
Washington, D. C.

DEAR SIR:—

As Chairman of the sub-Committee on the Unit of Light, and of the Technical Committee of the American Gas Institute, I have recently had an opportunity of consulting some of the officers, committee members, and prominent members of the Institute, on the subject of the proposed Resolutions drawn up by the Joint Committee of the three Associations, and I am led to believe from the views expressed that the American Gas Institute will not approve, at their next meeting, the Joint Resolution.

It is felt that the Institute will not, at that time, be in possession of all the facts necessary to enable them to act clearly. The most important of these is that it will not know exactly what change the adoption of the new unit will introduce in the business of the gas companies of the United States. This will be decided when your Bureau is able to fix on the value of the pentane lamp now being tested by you, which lamp bears the certificate of the Secretary of the London Gas Referees as having a value of ten candles.

In view of the fact that the American Gas Institute meets yearly, and by its Constitution this Resolution must be acted upon this October or go over until the meeting in October, 1909, unless the Institute by motion delegates its authority to a special committee with power to take final action in the matter when in possession of what they believe to be all the

requisite data, the Institute will be asked to have such a committee appointed to take final action and to act in an advisory capacity to you in all matters relating to the unit of light, if such is your desire.

In order that that committee may be most useful to you, I will ask you to advise me whom you desire to have appointed.

Very respectfully yours,

(Signed) W. H. GARTLEY,
Chairman, Technical Committee."

To this letter the following reply has been received:

"Washington, October 2, 1908.

Mr. W. H. Gartley,
Chairman, Technical Committee,
American Gas Institute,
22nd and Filbert Streets,
Philadelphia, Pa.

DEAR SIR:—

I am in receipt of your letter of October 2nd, in reference to the action that will probably be taken by the Gas Institute at its convention in New York on the resolutions drawn up by the joint committee representing the American Gas Institute, the American Institute of Electrical Engineers and the Illuminating Engineering Society. Though I regret that there is any reason why the Gas Institute should defer favorable action on the resolutions which have already been adopted by the two Societies, I quite agree with you that inasmuch as there is felt to be a lack of sufficient data it is much better to defer final action than to submit the matter to the Institute in an unsatisfactory condition.

Your suggestion that a committee representing the Gas Institute be appointed to confer with the Bureau on the subject of the international unit of light, meets with my hearty approval. I take pleasure, therefore, in suggesting the names of the following representative members of the Gas Institute to be appointed to serve on this Committee: Dr. A. C. Humphreys, President of the Gas Institute; Mr. Walton Clark, Past President of the Gas Institute; Mr. W. H. Gartley, Chairman

of the Technical Committee of the Gas Institute; and Mr. Arthur G. Glasgow of London, England, who I understand has represented the Institute in tests of pentane lamps that have been made in London.

In addition to these four gentlemen, I would be glad to consider as members of the committee any other members of the Gas Institute whom the President of the Institute may appoint. Moreover I would recommend, if consistent with your policy, that this committee be authorized to act in an advisory capacity to this Bureau for the ensuing year in all departments of the work of this Bureau in which the Gas Institute may be interested.

Respectfully,

(Signed) S. W. STRATTON,
Director,
E. P. H"

The present committee recommends that the Institute takes action in accordance with this letter.

W. H. GARTLEY,
C. O. BOND,
A. H. ELLIOTT,
A. E. FORSTALL.

At the close of his paper, Mr. Gartley offered the following resolution:

WHEREAS, the American Gas Institute, being fully in sympathy with the movement to establish an International Value for the Unit of Light, and to secure, temporarily, a National Unit acceptable to all the illuminating industries, has been diligent, through its committee and Board of Directors, in assisting in and observing the development of the movement, yet finds itself at this annual meeting lacking in possession of all the necessary facts, and

WHEREAS, the Bureau of Standards is now engaged in making tests from which can be determined the effect the adoption of the proposed new value of the Unit of Light will have on the business of the gas companies, and

WHEREAS, the Director of the Bureau of Standards has expressed a desire that a committee be appointed from our Institute to confer with him during the ensuing Institute year, on all matters pertaining to the Gas Industry, and

WHEREAS, the action of the Institute on the adoption of the value of the Unit of Light must be taken now, postponed until the next annual meeting, or be delegated to a committee with power to take final action

BE IT RESOLVED, that the President of the Institute be requested to appoint a committee, to include the members mentioned by Dr. Stratton, and such other members as the President may select.

I move that this resolution be adopted. The motion was seconded.

THE PRESIDENT: And continue the discussion later?

MR. GARTLEY: Yes.

THE PRESIDENT: There is a motion made to approve the recommendation of the Board of Directors. It is now open for discussion, if any discussion is desired.

MR. A. E. FORSTALL: In looking over this resolution there is at first sight a little ambiguity as to whether the committee is given power. The only place in which the conferring of power is mentioned, is in the last "Whereas." It is not mentioned at all in the resolution itself.

THE PRESIDENT: That is true.

MR. A. E. FORSTALL: I think possibly it might be better to instruct the committee to amend that resolution to the effect "that the President of the Institute be requested to appoint a committee with power to take final action in this matter."

MR. GARTLEY: I think that is a good idea.

THE PRESIDENT: That would also have the effect of removing another ambiguity as to whether, without it, you would not be giving them power to take action in other matters,

because the bureau chief wants to consult this committee on other matters. This would confine our power to this particular subject. Then the resolution would be, "Be it resolved that the President of the Institute be requested to appoint a committee to take final action in this matter of the unit of light, to include the members mentioned by Dr. Stratton, and such other members as the President may select." That would be your idea, Mr. Forstall?

Mr. A. E. Forstall: Yes.

The President: Is there any further discussion? If not, we will take the vote. All in favor say, aye. Contrary, no. It is carried.

BETTER GAS ILLUMINATION.

The President: We will have Mr. Litle's paper before taking up the discussion of the three.

Mr. Litle: (Reads paper.)

BETTER GAS ILLUMINATION.

In view of the recent radical improvements in the electric lighting field, it is about time that the gas man turns his attention to the general improvements in gas illumination. I say general, because I am perfectly aware that in some cities the developments along this line have been very marked, but broadly speaking the present practice in gas illumination is very wasteful.

The advent of the Illuminating Engineer, in conjunction with the recent electrical developments seems to have been more helpful to the electrical than the gas industry. There are various reasons for this. In the first place, light energy when produced electrically is far more costly than when produced by means of gas. In electrical circles, therefore, it was realized that to make any headway at all it was necessary to observe the strictest economy, which meant the proper placing of the lighting units and equipping them with the most efficient forms of reflectors. With gas lighting, however, this economy has never been necessary on account of the great gulf which has always existed between the cost of gas lighting and electric lighting. To-day, however, the gas man finds himself confronted with an improvement of nearly 300 per cent. in electric lighting efficiency. The gas engineers who have heretofore confined their attention to works' development and improved methods of manufacture will, therefore, be compelled to meet this serious problem immediately. The commercial department of every gas company in the country has found it comparatively easy to obtain new business on account of the high cost handicap of electric lighting, and all that was necessary in order to sell gas arc lamps, for instance, was to obtain a good persuasive solicitor, who often found it comparatively easy to keep a force of several fitters continually busy installing lamps. His was virgin territory, for in many cases he found people using either flat flame gas burners or bare 16 c. p. electric lamps, and under such circumstances it was not necessary for the solicitor to be very much of an Illuminating Engineer to handle the situation. To substantiate

this statement, I would like to draw attention to the candle power curve shown in Fig. 1, which shows the candle power in the lower hemisphere of a well known type of incandescent gas burner, and which has been very extensively sold in the American market during the last few years. While conceding

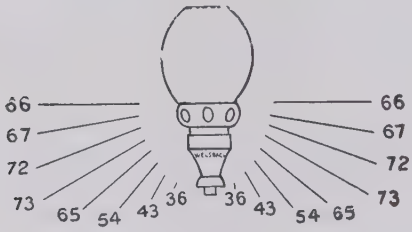

FIG. 1.

that this is better than the flat flame burner, it seems to me atrocious to use it for store window lighting, and yet I venture to say that there are many thousands so used. For example, such combination gives less than one foot candle immediately below on the floor of the window, where the burner is suspended 4 ft. above. The only light obtained directly below is reflected from the surrounding draperies at the top and sides of the window and the inside surface of the glass front.

Of course, the customer realizes that one of these burners will not meet his requirements, even for a tiny window, and he, therefore, is compelled to use at least two burners, with a gas consumption of not less than 10 cu. ft. per hour. You can, therefore, see how easy it is for the electric solicitor to place one 60 watt tungsten lamp, equipped with its characteristic Holophane reflector in this same small shop window, with greatly improved illumination, at considerably less cost—and that is how electric competition is going to be felt, for the electric man is well aware of the vulnerable points in gas illumination. The only alternative, therefore, is to anticipate this situation by the general introduction of more efficient devices.

The proper way to light a shop window is to use an inverted burner with concentrating shade, candle power curve of which

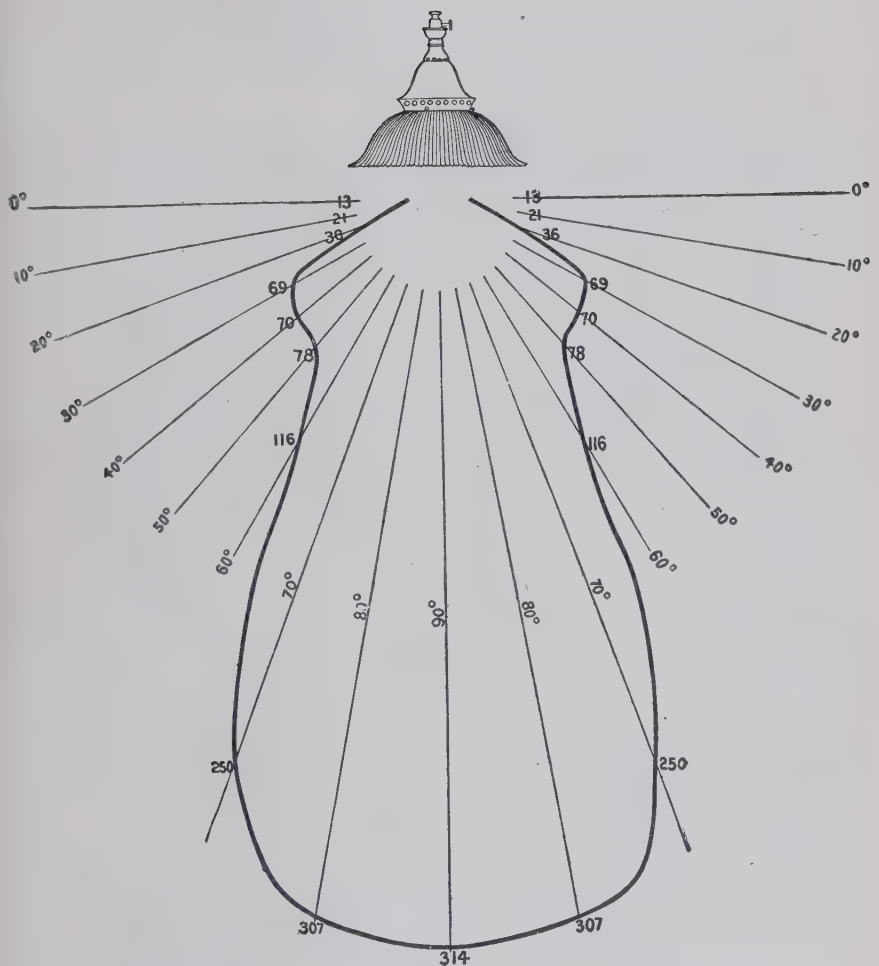

FIG. 2.—CANDLE POWER CURVE OF INVERTED BURNER WITH CONCENTRATING SHADE.

I am showing in Fig. 2. The gas consumption in this case is from 3 to 3½ cu. ft. per hour, and the illumination directly below is about 20 times that of the single burner before mentioned, but it must be remembered that the inverted burner

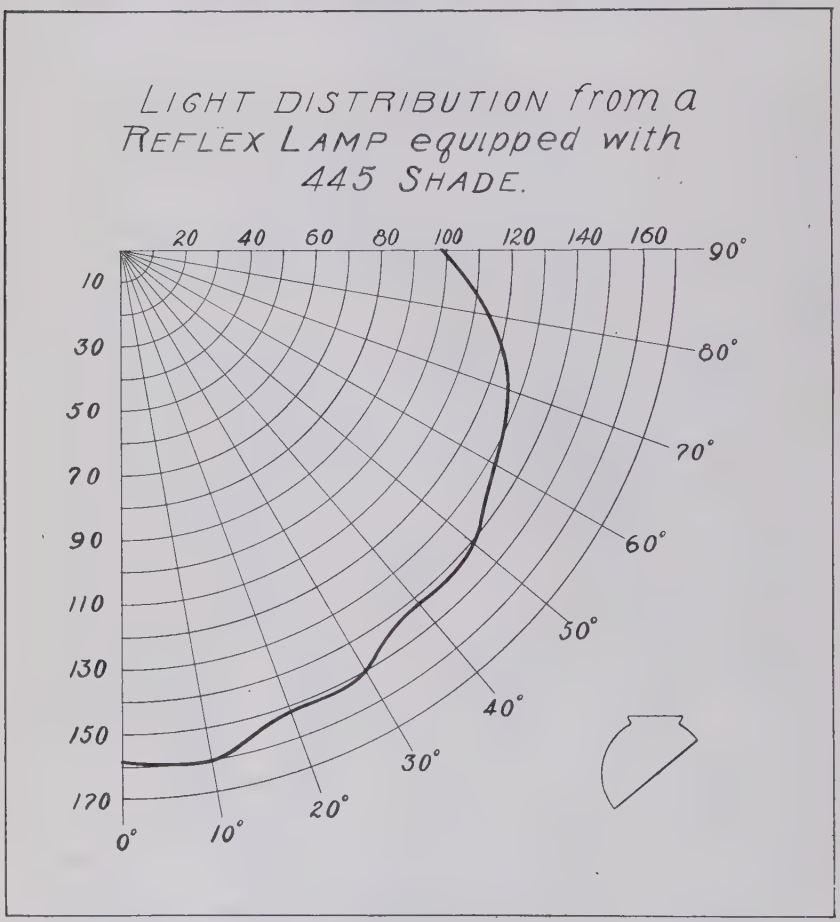

FIG. 3.

so hung would be too close to the floor of the window; and it would be far better to hang it at least 6 ft. from the floor, and even at this distance the light directly below would be at least nine times that of the upright burner mentioned, while

the distribution would be good. It might also be mentioned that the inverted gas burner so equipped will give a light flux several times greater than the 40 watt tungsten, where similar reflectors are used.

In this connection it might be well to state that the con-

FIG. 4.—APPLICATION OF ANGLE SHADE IN STORE WINDOW.

sumer has seen the advantage of the inverted burner over the upright form, and in many cases has placed them in his show windows; but the equipment, as a rule, consists of simply a clear or partly frosted globe, which gives only about a third

of the useful light it would give if used with the proper kind of reflector.

In lighting large store windows it is necessary to proceed in a different manner. The ceilings of such windows are

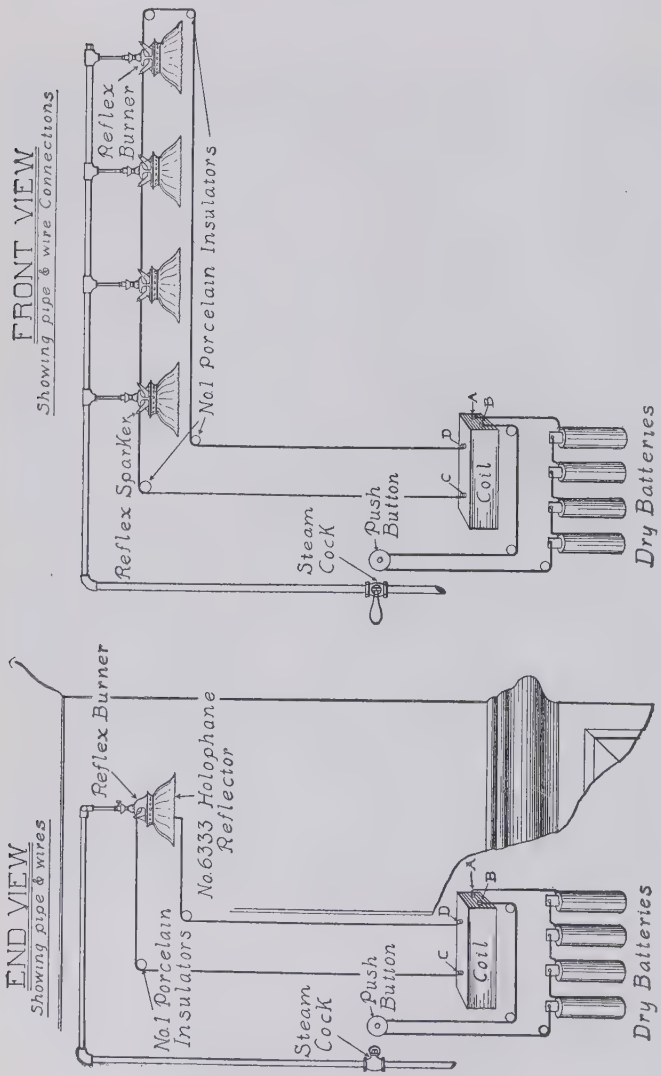

FIG. 5.—ELECTRIC JUMP SPARK SYSTEM FOR LIGHTING GAS BURNERS.

usually of sufficient height to allow the lamp to be hung high. If it is a boxed-in window and contains perishable goods, the lamps may be suspended above a decking, the light coming through glass panels. Concentrating reflectors are always used where the illumination is required only on the floor of the window, but where the illumination is wanted at the back of the window, as well as on the floor, angle shades as shown in Fig. 3 are used. It will be readily seen from the curve that the back of the window is lighted as well as the floor. Fig. 4 shows the application of the angle shade in a high class store window.

As the lighting of gas burners in store windows is sometimes rather difficult, and in some places it is impossible to use matches or tapers, the pilot system or the electric jump spark system, as shown in Fig. 5, is recommended. Many of these installations are in successful use, and in conjunction with the automatic clock, the pilot system may be arranged to light and extinguish the lamps at any predetermined time.

It is within the province of the Illuminating Engineer to decide these matters, and there should be such an engineer in the employ of every gas company, who should handle all such matters, where it is not only difficult but sometimes impossible for the solicitor to do so. I know of one electric company where a system as outlined above is pursued, and consequently their installations are all creditable. For instance, there was one case where they were called upon to light a certain store interior. The solicitor reported the case to the engineer with his recommendations. The engineer, however, thought it best to make a personal examination. He found that the interior decoration was generally dark and gloomy, and by a little personal talk with the proprietor he convinced him that it would be to his advantage to renovate his place, using a light color scheme throughout; that by so doing his lighting expense could be cut down about 40 per cent., not to speak of the more satisfactory results by daylight as well. The Illuminating Engineer should not be called upon simply in an advisory way, but he should come in direct contact with the

consumer in the above manner, and he also should be in a position to give instructions to the entire commercial staff. It is a comparatively easy matter to train the lay mind to distinguish the difference between good and bad applications in illumination. Place yourself in the position of the purchaser; you want an engine, for instance, and you want to talk to a salesman who knows all about engines, and for that reason all of our engine concerns now have mechanical engineers on the road. They are not necessarily slick articles from a salesman standpoint, but they are on to their job. The days of buncombe salesmanship are over; in order to sell illumination the salesman must know a great deal about good illumination, for the public are badly in need of it, and nothing pleases a good salesman more than to know that a man is in need of the product he has to offer.

Another mistake frequently made is to hang gas arc lamps on the existing outlets without any regard to their proper spacing. It must be remembered that these outlets in many cases were placed many years ago, when the flat flame burner was in vogue; and it can, of course, be seen that for the high power units of to-day they are placed too closely. The inverted light, while a decided improvement over the upright type, has already been much abused.

The characteristic curve of even the bare mantle gives more useful light. However, such combination should never be used for commercial lighting, but always with some form of reflector; any more than it would be sufficient to turn an incandescent electric light horizontally in order to get the benefit of its greatest natural candle power.

Prismatic reflectors are used universally in connection with the new metallic filament electric lamps. These reflectors are not only quite efficient, but present a very pleasing appearance. They must not be confused with the older types of prismatic globes, where the light was compelled to pass through the glass, as the filament or mantle was completely surrounded by the globe. These prismatic reflectors were never practicable for use in connection with gas burners of the inverted

type, on account of the cracking of the glass neck by the heat; but this has now been entirely overcome by the substitution of a metallic neck. This allows the shade holding screws to be turned in tightly and securely on the metallic neck which cannot be done in the case of the glass neck. This does not, therefore, place the inverted gas lamp at a disadvantage as was at first thought would be the case, due to the extremely high breakage encountered before the unbreakable neck was designed.

It was at first imagined that the commercial adaptation of the inverted mantle for large interiors would take the form of an inverted gas arc lamp, and consequently such lamps were built; but it was found that the combined light from a group of these mantles, surrounded by a spherical opalescent globe, was not any better than the combined illumination from an equal number of single burners equipped with similar globes. As has been shown, this kind of equipment is not conducive to the most useful light. As we cannot expect something for nothing, we cannot expect more light from a cluster of bare mantles than we could from an equal number of single lamps.

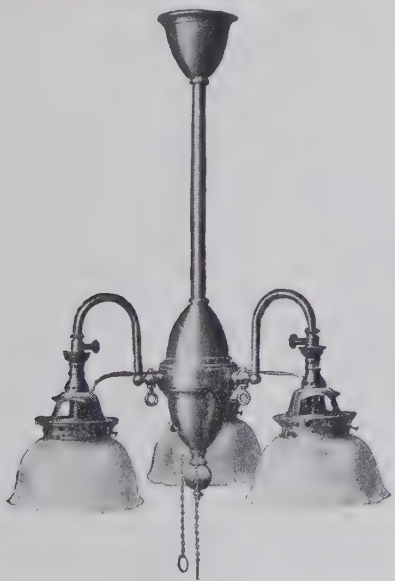

Fig. 6.

To-day, as never before, we lean toward economy; the old type of upright gas arc was all very well when electric competition was far removed, but the gas man will now have to be satisfied with reduced consumption and more efficient units; otherwise he will have no consumption for illuminating purposes.

In view of these circumstances a special fixture, equipped with inverted gas lamps, having in its body portion a master cock as well as pilot connection, and also a subsiduary cock for the individual control of the separate burners, the pilot lights being separately controlled, so that a simple operation of pulling the chain will light or extinguish all almps, has been designed.

The fixture is equipped with the well-known Holoplane glassware, the special feature of which is a metallic neck which has been substituted for the glass neck.

Fig. 7.

Light Distribution from a 3-Light Fixture equipped with Holophane Distributing Reflector No. 6321.

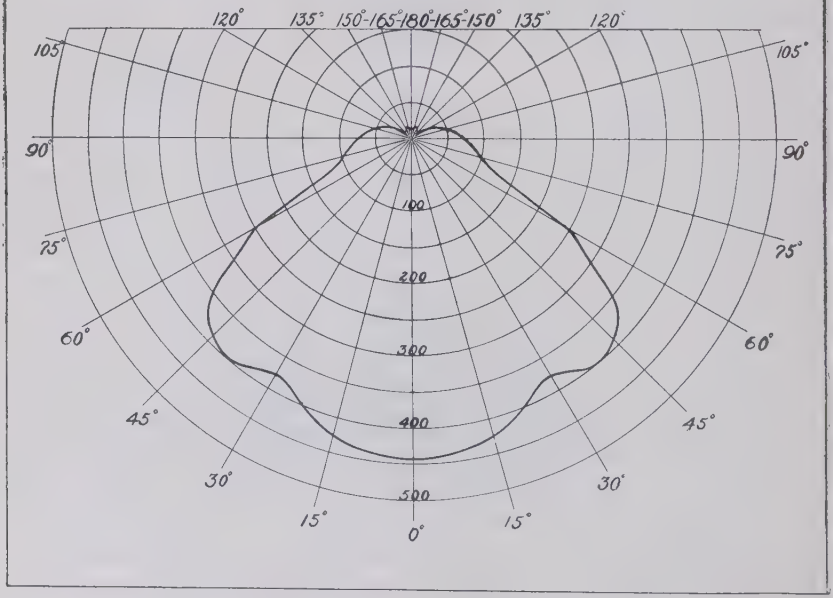

Figure 7 shows the candle power curve of such a three light fixture. The useful light in the room beneath is much greater than that produced by the five-burner inverted arc lamp, equipped with light alabaster globe, with same mantles and under same gas pressure. It must be borne in mind, however, that the inverted gas arc lamp gives more useful light than the upright arc. It can, therefore, be seen that this fixture is a very radical development and repre-represents the greatest useful efficiency possible in connection with modern gas lighting practice, and the cost of the unit light cluster in the useful zone with this combination is very much lower than that produced by the metallic filament lamps. While this embodies all the desirable features of the high efficiency inverted burner with reflector, it is so constructed that all the burners may be lighted or extinguished by the simple pulling of a chain, in exactly the same way as is accomplished in the gas arc lamp. This is a very necessary feature, as the consumer will seldom discriminate between high efficiency and convenience of operation.

A common mistake in the use of inverted burners is to place them on low hanging chandeliers. The inverted burner is at its best when hung high, as can be readily seen by its photometric curve. It is, of course, very difficult to give any general data, but wherever possible the fixture should be placed at least 9 ft. from the floor. Principally for two reasons: First, because of the character of the distribution curve at this height, the illumination is not only good directly beneath, but also on counters and shelves along the side walls; and, second, because lamps so hung are sufficiently above the range of vision so as not to be objectionable.

There are many applications requiring more than ordinary skill, where it is necessary to have some knowledge of illuminating engineering. A mistake is frequently made in the lighting of a bowling alley. In this case the inverted burner with angle shade, previously shown in Fig. 3, should be used, placed at such height and at such distance apart as to properly and uniformly illuminate the surface of the alley. While it may be argued that in cases like this a uniform illumination

is not necessary, as long as the pins at the end of the alley are properly illuminated, yet as a matter of fact the appearance of bright spots and dark spaces is very annoying to the players. Two of the largest bowling alleys in the country, located in Baltimore, are lighted in this manner.

In this connection might be mentioned the illumination of public halls, school rooms, etc. Invariably the lamps, whether gas or electric, are hung so that the light strikes directly into the eyes of the audience, but if the angle shades just mentioned are used with their blank side toward the eye, the source of light is completely hidden and a most restful sensation is experienced.

You gentlemen, as engineers, recognize the necessity of efficient devices in power application. You know that the old slide valve engine of the saw mill type has long since been ostracized from central stations, and I think there are entirely too many "slide valve engines" still in use in the lighting business. I do not wish to be considered as a calamity howler, as my remarks apply with equal force to the electric man; there are still some millions of red hot hair pins in nightly use.

These subjects are simply touched upon to show the importance of dealing with these matters intelligently and properly, and incidentally and not of the least importance, good lighting installations reflect credit upon the lighting company and make satisfied customers, the desirability of which to-day is appreciated by all of our great public service corporations.

The greatest problem in gas illumination in America seems to be the method of reaching the consumer. Where the lighting companies are not active in themselves placing the lighting devices, the consumer is compelled to purchase from the small dealer who has no idea of high efficiencies or economy as viewed from the consumer's standpoint. The dealer regards gas lighting appliances simply as merchandise, favoring that particular brand that nets him the greatest profit, and the natural result is that he procures the cheapest types which he sells at as high prices as he is able to get, barely keeping under the legitimate prices of the higher grade goods.

THE PRESIDENT: Gentlemen, we are going to open these three papers for discussion.

Are there any volunteers? If not, I will commence to call some names. Mr. E. L. Elliott. Mr. Elliott is not a member of the Institute, but with your permission I am extending the privilege of the floor to him.

MR. E. L. ELLIOTT: I was very kindly invited by your Secretary to discuss Mr. Litle's paper, which is upon a subject that I think of very great importance, both to the electric and gas industries at the present time. The principal text you will find in the beginning of the second paragraph, "The advent of the illuminating engineer, in conjunction with the recent electrical developments, seems to have been more helpful to the electrical than to the gas industry." The electrical industry, of course, always realized the fact that there was a very large price discrepancy to overcome in introducing the electric light. To counterbalance that, there were certain features of convenience, freedom from heat and so forth. In Figure 1 of the paper you will see the ordinary cheap type of incandescent burner. I have bought many a one from a 10-cent store. You will notice that you get 36 candle power practically directly underneath the burner, and with the cost of gas at $1.00, and electricity at 10 cents, you can run that burner, I suppose, for a third of a cent an hour, as against one-half a cent for a 16 candle power electric lamp; but your 16 candle power incandescent lamp, under these conditions, that is without any reflector, would give you 7 candle power underneath it instead of 36, so that with the simplest form of burner that is on the market, the cheapest kind—the 10-cent counter kind—you have got 36 candle power, as against 7, with a third of a cent as against a half cent. Now that is a large handicap for the electric light, but that is taking the electric lamp without any means of utilizing its light. Suppose you put a good reflector on that electric lamp, you can get 40 candle power or 50 candle power underneath it instead of 7. Suppose you take the latest improved electric lamp, the Tungsten lamp, which uses about a third of the current of the old lamp, and use a good reflector, and you will utilize

even more candle power because the light is thrown underneath, where it is wanted. Now that is a plain illustration of illuminating engineering. That is, taking the gas lamp without any engineering, the simple cheap lamp, and the electric light, with good engineering, will beat it. The electric light can beat gas by engineering; in other words, the latest and best forms of electric lamp, plus illuminating engineering, will beat the ordinary gas lamp without any engineering. That is a simple matter of figures, and a matter of actual fact, it is not only a matter of theory, but it is something that is being done. You all know of installations that will illustrate this. Mr. Litle pointed out one in a store where the gas equipment was removed and Tungsten lamps went in, and I will venture to say, that if he had gone into the subject further, he would have found some illuminating engineer had gone in there and persuaded the proprietor by good arguments, that he could get better results with electric lights. The electrical interests have been very alert in taking up and recognizing the advantages of illuminating engineering. Almost as soon as illuminating engineering was recognized as a legitimate division of applied science, the great electrical corporations and industries at once took it up. More than two years ago the General Electric Companies had a half-page advertisement in the New York Daily Press, in which illuminating engineering was the chief head line. Recently some of the largest central stations have spent thousands of dollars not only in establishing departments of illuminating engineering for the benefit of their consumers, but in advertising in the daily press, as for example in Boston, and I believe in Chicago. The opinion, I think, got abroad to some extent that illuminating engineering, on account of its having been taken up so vigorously by the electric companies—the electric interests, both the lamp and supply men, and the apparatus makers—that it was a sort of game, some kind of a trick of the electrical fraternities to steal a march on the gas interests. Do not make that mistake; it was nothing of the kind. The illuminating engineer came in as a matter of necessity. The old methods of using light were so wasteful and so unsatisfactory in their results, that something had

to be done. The users of light brought it about; they insisted on something being done and the electrical interests at once saw the advantage it would be to them to take it up.

Now, it is a rather curious coincidence in the development of lighting that the improvement in gas lighting has been contemporaneous with the improvement in electric lighting; for instance, when the incandescent electric lamp first came out—which really made electric lighting a prominent feature in the lighting industry—practically at the same time as the revolutionary discoveries of von Welsbach, which put the gas men on a par, and put it in the race on at least an even basis; then the electric light ran along about twenty-five years on a dead level, without any radical improvement, then all of a sudden, both in the field of the arc light and the incandescent, improvements were made which were revolutionary—the flaming arc and the Tungsten lamp, which cut down the consumption of current one-third, are certainly revolutionary in electric lighting. Coincident with this we have the inverted burner in the gas field, and improvements in the mantles, and there has been some gain in matter of cost. As I said before, the gain has been enough in the electrical industries so that by the addition of good practice, using the best apparatus for utilizing the light, and by illuminating engineering, they can overcome bad practice with gas lighting. There is no reason why the gas light, as it exists to-day in its best form, as you see from the examples here and those which Mr. Litle showed, should not compete on every hand with the electric light. If the illuminating engineer was set the task of lighting this room with gas, he would do it just as well as it is lighted now; and so with almost any other installation. There are a few fanciful effects that can be obtained with electricity that are not obtainable with gas, but they are minor; they scarcely need any consideration in the general problem. If the gas interests to-day will take as much pains with seeing that their light is properly used, used to the best advantage, as the electrical interests have done, I see no reason why the race should not run along just about as it has been running ever since the electric light has existed. I view the thing as an outsider. I am witnessing and look-

ing upon the whole thing as a race, as a general contest for place, and I want to see the best man in every special field win. It does not follow that the best sprinter will be the best weight thrower. There are uses for all the new lights that are coming in. And experience has shown that to improve any lights has never meant a diminution of any particular light. There are more candles used to-day than ever before in the history of the world, actually, and no one need be afraid that his particular light is going to be snuffed out because some other light has come into the field. The field is growing too large. We are only in the beginning of the use of artificial light. In our exterior lighting we are only just groping in the dark except on a few show streets in the cities, and the uses of artificial light are only beginning, so to speak. So I am very glad of the opportunity to give one word of urgent appeal to the gas interests to take up illuminating engineering; use it for all that there is in it for your interests, for thereby you will be benefiting the general lighting industry, which is a benefit to mankind in general. I thank you for this opportunity. (Applause.)

THE PRESIDENT: I very much dislike always to call on the members to speak by pre-arranged plan, because it seems to discourage others that ought to speak. Still that has been found to be necessary apparently in this Institute, and its predecessors. It seems to be particularly necessary under the conditions that exist to-day. Shall we hear from Mr. C. W. Hare?

MR. HARE: (Reading paper as follows:)

Mr. Litle's paper is particularly valuable in that it seeks to awaken an interest in the effort to bring gas lighting up to the standard set by electric lighting companies.

There are several points in the paper to which I would like to draw particular attention.

Mr. Litle states that in electric circles it has always been necessary to observe the strictest economy, which means the proper placing of the lighting units and equipping them with the most efficient form of reflectors. He further says that "with gas lighting, however, this economy has never

been necessary." I presume he does not mean exactly that, but that the necessity for economy in gas lighting and the proper placing of the lighting units had not been fully appreciated, for there can be no question but that if this point had been fully appreciated and considered with due care, that the gas fraternity to-day would have been in a better position to meet the electric competition than it is, and that the efficiency of gas for lighting purposes would, in all probability, have shown the same increase as has electricity.

While it is quite true to-day that gas engineers and commercial departments are giving a very large portion of their time to developing ways and means to improve the methods of gas illumination, such a change has been brought about almost entirely by the activity of the electric lighting interests, and the necessity of protecting the present lighting business of gas companies, as well as the necessity for extending the use of gas for lighting purposes.

Some gas companies in the past have not displayed sufficient activity in the illuminating end of their business, and in many instances, have neglected the proper lighting of their own offices, a matter which has generally been given the closest attention by the electric lighting companies.

One can hardly expect to develop successfully the use of gas for store lighting, and the necessity for brilliantly lighted stores after business hours for advertising purposes, unless we show that we believe in this practice by adopting it ourselves, and I cannot, therefore, too strongly advocate the necessity of giving close attention to gas office illumination, in order that we may have constantly on exhibition what we believe to be the most effective commercial methods for utilizing gas in the lighting field.

The problem of reaching the consumer will always remain a difficult one, but it can be materially lessened if we realize the importance of having our salesmen constantly supplied with the very best in the way of lighting material.

If gas companies will bend their efforts to place on the market only those fixtures and burners of the most approved type, and educate the consumer along these lines, the small dealer will have to fall in line, and I therefore think it of

the utmost importance for gas companies to pay more attention to the fixture, burner, and glassware end of their lighting business.

At the present time, our electric competitors are able to show, in most instances, far superior lines of fixtures and glassware, and as an instance I would like to draw attention to the Satin Finish Holophane globe, which is beginning to be used extensively in connection with the Tungsten lamp.

At this writing we are unable to supply this type of glassware for the inverted light.

The question of the pilot light in connection with the inverted light is also one to cause us considerable anxiety.

When the average store-keeper, after having been induced to equip his premises throughout with inverted lights, finds that on many occasions, the pilots have been blown out by the wind, and that he is perforce obliged to hunt around for a match or taper, he is in a very receptive frame of mind for the electric light canvasser, and some means should be devised through which this uncertainty of the pilot system, as adapted for use with the inverted light, could be obviated.

In efficiency the inverted arc is more than equal to the Tungsten light, and when it is once on the market, in 2, 3, 4 and 5 burner sizes, I feel convinced that we will have a very useful appliance with which to hold existing business, as well as to secure new business.

Complaints from our consumers must be avoided, and we should never place on the market for general sale, a mantle, lamp or fixture, until we have assured ourselves that it can do in every particular what we advertise it to do.

In this connection, the question of proper maintenance is one which cannot be too carefully considered. If the cost of maintenance leads a consumer to refuse to assume the charge, our interests suffer. It is, therefore, essential that the burners which we place on the market must be of such mechanical construction as to insure a minimum maintenance cost.

The importance cannot be over-estimated of having salesmen who understand good illumination, and who will not

in their zeal to make a record, place on the consumer's premises a greater number of lights than are actually required. A satisfied consumer is the best advertisement a gas company can have. A dissatified one is the worst.

MR. CHARLES M. COHN: I should like the privilege of making a single remark suggested by Mr. Litle's paper. It would be interesting to know Mr. Litle's experience as to the minimum pressure at which the inverted gas lamp can be satisfactorily operated.

THE PRESIDENT: Will Mr. Litle please make a note of the question?

MR. A. E. FORSTALL: In speaking of the proper point at which to make the determination of quality, Mr. Bond makes the statement that it should be made at the same point as the determination of quantity, that is, at the outlet of the station meter. If I were running a gas works, there would be no place where I would rather have the determination of the quality of gas made than at the outlet of the station meter, because I could so handle the manufacturing apparatus as to be accounted a very good works manager when I really was giving a product that was not very good from the company's standpoint. A gas that will show up very well at the outlet of the station meter may not be the best gas for the gas company to make, because it can very easily be made in such a way as to lose much of its candle power before it reaches the point at which the quality is important and that is at the consumer's burner, because we can assume that any quality that goes to the city testing place will go to the consumer's burner; so I disagree with Mr. Bond as to the point at which the test for quality should be made. It should be made for the gas works, at the outlet of the holder, because no matter what the conditions of weather are, what the gas companies are interested in, it seems to me, is in sending out a gas of a certain quality from the outlet of the holder; that is as far as the works' end is concerned.

I am not quite certain I understand Mr. Bond's idea as to the proper standard burner to be used for photometrical work. There is a little ambiguity in his statement that the "type just mentioned" should be specified, and the suc-

ceeding statement that tests should be made to find a burner in which both air supplies are capable of such regulation as would give a maximum efficiency for the usual range of illuminating gases. The burner, "just mentioned," seems to be the Parliamentary burner of Mr. Grafton, and it is stated that in that burner provision is made for the regulation of both air supplies. I think it is somewhat important that the English speaking races should adopt the same standard burner for photometrical work, and this would apparently be the Carpenter burner, which is firmly entrenched in England. It seems to me we should adopt that burner in this country, at least for the qualities of gas within its range, and if necessary to go beyond that, then we should adopt a burner which would do justice to the higher qualities.

THE PRESIDENT: Shall we hear from Mr. Butterworth?

(Mr. Butterworth then read the following:)

Mr. Litle's paper should certainly help convince us that gas companies now-a-days need to give much more careful, intelligent and scientific attention to the subject of gas illumination, than has been felt to be necessary in the past. The days of rough and ready, haphazard and rule of thumb installations of gas fixtures and burners are over, and if we are to retain our available share of the business of artificial illumination, we must arrange to go into the refinements and science of gas lighting more thoroughly than heretofore. So long as we can, with proper equipment, make gas light much cheaper than electric light—which Mr. Litle assures us is easily the case, notwithstanding the recent noteworthy improvements in the latter—we have every incentive for giving great attention to this part of our business; for with the great majority of householders, manufacturers and merchants, cost is still the paramount consideration. I have noticed that the meetings of the so-called "Illuminating Engineering Society," and the periodicals ostensibly devoted to artificial illumination of all kinds, treat almost wholly of electrical illumination, gas illumination receiving scant attention. This I think is the fault of the gas men themselves, and it behooves us

(to use the expressive slang term) to get busy. It seems to me that a section of this Institute, or a separate organization of gas men, should take up the one subject of *gas illumination engineering*, and that gas companies and gas men everywhere should be encouraged and instructed in the development of more scientific methods of gas lighting. The fact that the use of gas for fuel purposes has increased so enormously is no reason whatever for our neglecting, as I fear some of us are doing, the intensive cultivation of our lighting business, which comes to us as a rich heritage from the past, and still constitutes a large percentage of our business. As compared with electricity, gas is still doing the bulk of the artificial lighting in practically every community, and by proper methods there is no question that it will continue to do so.

Mr. Litle discusses, among other things, the relative merits of inverted gas arcs and reflexoliers for the illumination of large areas. I have no doubt he is correct in his statement that the useful light in the room *beneath* the 3-light reflexolier is much greater than that produced by the 5-burner inverted gas arc; but I still think that the inverted gas arc has elements of great popularity and will be largely preferred to the reflexolier, just as the upright gas arc has been preferred to separate Welsbach units that were theoretically and actually more economical and efficient.

Mr. Dewey: In the Wrinkle Department of the American Gas Institute last year, we gave as a wrinkle a sampling holder which overcame some difficulties, and which I believe is worthy of careful consideration. It does away with the wire drawing of gas. In taking an average sample for testing purposes, we oftentimes take the same into the small holder through an open orifice. In doing this we are liable to err, in that the specific gravity of the gas varies considerably during the charge. In that way we are liable to get a large proportion of the lower candle power gas and a smaller proportion of the higher candle power gas; thus the actual sample would not be an exact representation of the gas being made.

Regarding the proper burner, about a year and a half ago we were called upon to decide exactly what our ordinance

meant and what should be the proper test burner. At that time a committee from the State recommended to the City, and to the company, that the Carpenter Metropolitan No. 2 burner should be the standard burner. At that time we purchased four of the burners from London, and have done considerable work with the Metropolitan burner at Detroit. We have found, invariably, that the Metropolitan burner gives better results on all kinds of gas, water gas included, up to about 24 candles; beyond that the flat flame burner is better. I believe we should be safe in adopting the Metropolitan No. 2 burner as the standard burner.

Mr. R. B. Brown: Before this discussion is closed, I wish to say that I do not like to see put on record such an apologetic lot of remarks from gas men about gas illumination. It seems to me that there is an undercurrent all through this discussion, and even, though I know unintentionally, in some of Mr. Litle's remarks, of apology for gas—"By doing so and so we can do equally well"—"We can do almost as well as the electric light"—"We can replace electric light," etc. I am sorry that we did not hear from anyone who had some first hand knowledge of what is being done on the other side with these wonderfully high efficiency lights; the Keith light for instance, the high pressure installations that are claimed to be giving over 60 candles to the foot. Now it does seem to me that we have some examples—not some, but a great many examples—of illuminating installations that have not been equaled and will not be equaled for some time to come, by our electric friends, and I do not think we ought to put such an apologetic tone into our discussion of the lighting and illuminating engineering of to-day.

Mr. A. S. Miller: Mr. Chairman, as the time is short, I will simply ask permission to contribute later a few words to the Publication Committee on the subject of Ornamental and High Efficiency Lights. The latter subject was referred to by Mr. Brown. I am amazed at the progress of the gas industry. A man has stated here that the so-called gas arc light is not entirely satisfactory, and he has not been torn to pieces! I should like to ask Mr. Litle whether it is entirely safe to put this type of light over the heads of

people in a public auditorium, whether there is any danger of breakage and falling of broken glass.

(The following remarks were contributed by Mr. Miller later on:)

In treating this subject Mr. Litle has failed to emphasize the importance of artistic illumination. A larger number of people are prepared to pay any reasonable amount for light and will not object to the expense, if the effect of the lighting is pleasing. This feature has been largely ignored by those interested in gas lighting and, as a result, we have lost much business to the electric light companies which could otherwise have been retained.

Mr. Litle has also failed to refer to high efficiency lights. There has been on the market, in this country, a lamp which would give from 30 to 35 candles per cubic foot of gas burned. It is not beautiful, but it is well adapted for lighting where large units are satisfactory and 6 feet of gas in this lamp gives 200 candle power. It is surprising that the incandescent lamp manufacturers have done so little towards developing this type of lamp. One of the larger gas companies in this country, finding it impossible to secure just what it needed in this line, was compelled to have the lamps made for its own use. These lamps proved to be eminently satisfactory and should be in much wider use.

Mr. Brown has already referred to very high efficiency lamps using compressed air, but there is room for lamps of medium efficiency between the ordinary Welsbach and those requiring mechanical aids.

Mr. Searle: In connection with Mr. Litle's paper, the hidden vein of Tungsten appears. Mr. Brown remarks that the gas man is apologetic. If Mr. Brown had attended as many electric meetings as I have lately, he would know that the electric men are saying, "We have got the Tungsten lamp now and we can do as well as gas." There can be no question, gentlemen, there is going to be a survival of the fittest for certain classes of illumination. We should not deceive ourselves, some people would not take gas as a gift, while others would not take electricity as a gift. The reduced electrical consumption means a higher cost per

kilowatt hour for an isolated steam plant. That means a cinch for the gas engine. You should be as familiar with the Tungsten practice as you are with the inverted lamp brackets. The company that I represent, felt two years ago that it was necessary to organize a commercial engineering department to follow along intelligent lines the applied science of both gas and electric lighting, as best adapted to the interests of the consumer, and if you were in the position I occupy, you would know that it is best to tell the consumer the absolute truth, without bias, in each individual case.

The Tungsten lamp started out with a claim for an ideal efficiency. The tendency seems now to be to admit a higher rate of consumption in the Tungsten lamp; for instance, they now claim one and three-quarter watts per candle, instead of one and a quarter watt; that raises the cost of Tungsten *versus* inverted light illumination a peg or two and makes the situation easier. I have not felt that we want to discourage progress in either light, because I have always felt a man who stood in the way of progress would get a bump. The electrical people are looking toward the displacement of gas with Tungsten lamps, as the salvation of their business, but the same equation would exist as it has existed in the evolution of the lighting business mentioned by the first speaker.

A reduced electric consumption means a re-adjustment of rates, leaving the electric light bill, on the basis of present profits, where it stands to-day. The same opportunity for competition then comes to the gas man to enter and secure the business or hold it, so that if we keep up our progress in lighting, we have nothing to fear from the progress of our competitor.

THE PRESIDENT: Mr. Gartley, will you take the stand?

MR. GARTLEY: I just want to say that we have an opportunity that we ought not to miss of hearing once more from Dr. Hyde, who is here on invitation, and who has represented the Bureau of Standards in the past on a number of matters affecting the gas business, and very largely in this matter of photometry and in the determination of the unit of light. If Dr. Hyde were not here I should be very glad to take a few

minutes to say a few words about his international reputation as a photometrist, and regarding the spirit of fairness and common sense mixed with scientific abilities with which he has treated the illuminating industries in his department. (Applause.)

THE PRESIDENT: If Dr. Hyde were not present I should like to follow up Mr. Gartley, and make some remarks in the same line. I have no doubt, gentlemen, without putting it to a vote, that the privilege of the floor is extended to Dr. Hyde.

DR. HYDE: Mr. President and Gentlemen: It is with the greatest pleasure that I have received the privilege of speaking to the members of the Gas Institute once again, and the pleasure is more intense because I can come and speak on the same subject on which I spoke last year, and on which I have been speaking to audiences during the day, and to myself as an audience at night during the past year. (Laughter.) I make a report as a committee of progress. With the very short time at the disposal of the Institute for the discussion of the valuable papers that have been and are being presented, I do not feel as though I should take the time to elaborate at all what Mr. Gartley in his report has so carefully and so well stated. I do want to take advantage of the opportunity to express my personal gratification—and I think in doing so, I am sure of it, I am reflecting the feeling of the Bureau of Standards in the matter—our gratification at the way in which the various technical bodies, and in particular, the American Gas Institute, have endeavored to support the Bureau of Standards in its overtures in regard to an international unit of light. The work is progressing well. The other two bodies, the Illuminating Engineering Society and the American Institute of Electrical Engineers, have already adopted the resolution, and I sincerely feel that the American Gas Institute is right behind them in it. They have more at stake, and I think they are well justified in proceeding slowly, and I think they are entirely right in waiting for final action until they know, through a definite test of

a lamp which has been used as their standard, how their standard will stand as compared with the proposed international standard.

I think I might say in closing that the Bureau of Standards has already made some overtures abroad in regard to an international unit, and I believe that if the Gas Institute joins with the other two societies in endorsing the proposals of the Bureau, and in endorsing the resolutions looking toward an international unit, that England and France will enter into the conference with the United States in agreeing upon a national unit. We all have admitted—it was easy for us to admit, that a common international unit is a good thing, but it is a different matter to decide offhand whether such a change as has been necessary in order to bring about international unity, was feasible. I certainly feel, and have felt, that the Bureau of Standards has believed all along that if the adoption of an international unit would entail any serious loss to the industries of this country, that we ought to stop immediately any act looking towards its adoption. I believe that, as things look now, there is not going to be any great loss, and certainly the interests, industries and societies of the country have most nobly come to the support of the Bureau in bringing about this desired end. I thank you. (Applause.)

Mr. Paul Thompson: In connection with Mr. Bond's paper I think it might be interesting to note some developments that have taken place since he wrote his paper in connection with the difficulty in the shipment of pentane. Formerly the railroads refused to take pentane except under very onerous conditions and in some cases absolutely refused to transport it. The express companies have absolutely refused to handle it under any conditions. In taking the matter up with the railroads for the purpose of trying to persuade them to accept it for shipment, we were referred to Col. Beverly W. Dunn, who was detailed by the United States Government at the request of the Inter-State Commerce Commission to take up the general question of the shipment of inflammable liquids and decide what regulations and rules should be required by the railroads for the safe ship-

ment of merchandise of this nature. At the time we first took the matter up pentane was on the tabooed list. After consulting with Col. Dunn, I am glad to say that he has recommended to the railroads that the shipment of pentane be allowed under conditions which I think will make it possible for anyone to forward it; and the railroads have accepted his recommendations. Anyone who is interested can write to Col. B. W. Dunn, at 46 Park Place, New York City, and he will give them the rules and regulations covering such shipments. Briefly, the regulations provide that pentane can be shipped in small cans, similar to tomato cans, of a strength which, under certain degrees of temperature, will not burst, each can holding sufficient to fill one of the containers of the pentane lamp. Col. Dunn advises me by a recent letter, that he has taken this matter up with the express companies and that he is very hopeful that they will modify their rules so as to accept pentane for forwarding when shipped in containers such as he has approved of for the railroads.

Mr. Geo. Barrows: I should like to ask Mr. Litle if they have found any points for the jump spark lights, especially with the inverted lamp, which they can be absolutely sure will not corrode or fail, under the ordinary conditions of use. What provision has been made to advise the person using the parts that the parts are, or are about to be, played out?

Mr. H. Thurston Owens: Regarding certain statements in Mr. Bond's paper, I would say that the question of illumination does not enter into the value of light sources. If we determine the MSCP we have a value which is comparable for all light sources.

Regarding better gas illumination, it is quite as important to arrange our lighting systems so that lamps of high intrinsic brilliancy will be kept out of the line of vision, as it is to provide a satisfactory amount of illumination.

In reply to Mr. Searle's remarks regarding the Tungsten lamp, I do not believe that the use of current owing to the introduction of these lamps will be materially reduced, and as an example, would cite the conditions in the gas business

since the advent of the mantle lamp. In the past decade there has been an increase in sales per capita of gas for lighting purposes of at least 25 per cent.

THE PRESIDENT: Before calling upon the several authors to close the discussions, I want to make one point in regard to Mr. Litle's paper on the question of illuminating engineering. While believing thoroughly in the advice that has been given that we gas men should pay more attention to illuminating engineering, I deprecate any statement that intimates that we have never given any attention to the subject, yet it is an opinion held by the electric light men, and the remarks of Mr. E. L. Elliott, seem to tend in the same direction. At a meeting, held about a year and a half ago, by the members of the Illuminating Engineering Society in connection with the matter of unit of light, I noticed all through the discussion, wherever the subject of illumination came up, the tendency, perfectly honest, to take the position that no illuminating engineering had been undertaken by gas men. I finally stated, after the meeting had gotten through with the business in hand, that while I thought I could give a great many examples to disprove any such position, I should like to ask what particular things they could point to as indicating the beginning of their profession, and they pointed to indirect illumination; and asking more specifically what they understood by that, they spoke about cove lighting. I then stated that I felt very sure I could place before them information to indicate that the gas men had done that before electric lighting was practically known. I referred to the illumination of the Philharmonic Hall, in Liverpool, and I knew perfectly well that that had been lighted by indirect illumination reflected from the ceiling with the lights out of view, for some sixty years. That was my impression at that time; that I myself had seen it ten years ago, and had never seen a room with a better class of illumination. I, therefore, wrote to my friend, Mr. William King, and asked him if he would give me an account of the illumination as installed in that hall by his father. I cannot do better than to read from the letter which he returned to me. I would say before doing that, however, that

the electrical engineers were most generous in their treatment of my statement. They said they were delighted to hear anything new in that line. They said they would welcome a statement from me and would put it in their Proceedings. I really have not had the time to prepare a paper, and I think this is a good opportunity for me to get it on our record without going to that trouble. (Reads letter.)

5 Beach Lawn,
Waterloo, Liverpool, England.

Philharmonic Hall, Liverpool, England.

This hall is the property of the Liverpool Philharmonic Society, and is used, chiefly in the winter months, for high class concerts, and is occasionally let for public meetings. It holds 3,000 persons and is one of the most beautiful concert rooms in Europe. It was completed in 1849, and the method of lighting was invented by my father, the late Mr. Alfred King, M. Inst. C. E., who for many years was Engineer to the Liverpool Gas Light Companies. A pipe was carried along the cornice, as shown on the accompanying drawings, and to this a number of triple flat flame burners were fixed, thus giving a continuous row of lights. The effect was most brilliant, the whole room was filled with light, and the burners were so far above the audience that no inconvenience was experienced.

The coved ceiling above the lights was filled with panels of lattice work, and thus the hot air from the gas found a ready means of exit, and causing a strong upcast current, formed an admirable means of ventilation, no down draughts or eddies of cold air being felt.

A few years ago the gas burners were removed and a row of incandescent electric lamps were fixed in their place and in the same positions. The result was very unsatisfactory. The light was not nearly so brilliant as when gas was used, and in consequence of the want of the warm upcast from the gas flames, continual complaints are received of want of ventilation and the descending currents of cold air.

It will then be seen that nearly sixty years ago, the system of "cove" lighting by gas had been successfully introduced in Liverpool.

(Signed) WILLIAM KING,
M. Inst. C. E.

The sketches necessary to explain the proposition, though it is perfectly understandable without, accompanied the letter.

Does anyone else wish to speak before we call upon the authors of the papers? Mr. Bond, will you reply to those who have discussed your paper?

MR. BOND: The first point was made by Mr. Forstall on a question of the outlet of the station meter as a proper place from which to derive the sample gas. The very point made there is that this is the place to determine the candle power for works gas and for works purposes; if you are going to meter your coal and water gas, and mix them immediately afterwards, as is done at a great many works, it would be impossible to get the candle power at a later point along the line. Even if that were not so and you were making water gas only, I think that through the use of this cooling coil I have mentioned, at 60 degrees, you would do away with any possibility of pseudo enrichment at that point, because it will be brought down to 60 degrees anyway. Of course if a man wishes to tamper with his photometer line and introduce benzol, pentane or something else, he could get good results anyway. Another criticism was that in putting this gas into a small sample holder and collecting it for one hour, the gas would be subjected to "wire-drawing." The holder mentioned was of between 5 and 10 cubic feet capacity. The rapidity of flow of gas that you send to your photometer is 5 feet per hour; it will not wire-draw any more going into the holder than into your photometer burner, so that the criticism is just as applicable to one as the other. That is, conceding all the time that the wire-drawing is having a real effect on the gas and that the effect is not due to a state of low temperature at the point of wire-drawing, rather than something else.

Ambiguity is charged as to what was meant by proper burners, saying that I referred at one time to the Carpenter

burner, at another time to the Grafton or Parliamentary burner. I spoke of these as types of burners, not necessarily recommending either the Carpenter or the Grafton or Parliamentary burner, though they do indicate a type of burner which we should investigate. As stated before, there should be tests made to find if a burner is not possible in which both air supplies are capable of such regulation as would, for the type of burner specified, give a maximum efficiency for the usual range of illuminating gases. Now, the Grafton burner, while having one shutter that controlled both the external and internal air supplies, has those air supplies proportioned by the size of its apertures. I would like to have the regulation such that both the internal and external supplies of air could be properly determined, in order to find the maximum illumination from the gas, just as the calorimeter finds its maximum heating value. A gentleman, whose name I do not remember, spoke of the Carpenter burner as being satisfactory up to 24 candles, but above that the flat flame burner was better.

The President: It was Mr. Dewey.

Mr. Bond: I think, perhaps, there may be places in the country where more than 24 candles gas are specified, say 25 candles. Now it is found that the Parliamentary burner is more satisfactory than the Carpenter burners for 24 candles, and it is due to science that we should secure an efficient burner for the entire range of gases.

Perhaps this would be the proper place to introduce a subject germane to this. This paper seems contradictory in one way, in that I have gone on arguing for a better type of burner, a scientific burner, with which to photometer our gas, and yet in the concluding remarks I have made provision for the time when the candle power method of testing gas would be done away with entirely. There has been some talk—in Wisconsin it has gone further than talk—of submitting a test on a calorific basis instead of a photometric basis.

Laws are made as a result of public opinion largely. Public opinion thinks that 16-candle power coal gas is about 650 or 700 heat units, and it thinks 22-candle power water gas

has an equivalent value. That opinion has been formed with the use of some old form of burner. It has not been based upon a form of burner which is scientific, and the gas companies in Europe are finding that out. Now I submit that in the past, and up to date, we have been using the cream of the raw material we get. The cream of the oil, the cream of the coal, and the time is coming when there will be no more cream. Then what are we going to do? Are we going to back water then, or are we going to back water now? I think if the proper type of burner can be put before the public, a scientific burner, and they can be educated to understand that a 16 candle power coal gas through an old flat flame burner is not equivalent to 670 heat units, then you have achieved the purpose in view. You have staved off the day of turning over a calorific qualification until the people can understand what 670 heat units is equivalent to.

Mr. St. Clair DeVille, of Paris, in his very able paper of this past year seems to have arrived at the conclusion that the calorific power and the illuminating value of gas as witnessed through the mantle were about parallel, and if you will look through his experiments you will find that with many gases of varying calorific values, he finds that the number of British thermal units necessary to produce 1 candle power is fairly constant. He makes no provision for the Keith light, which comes later and gives you 60 candle power to the cubic foot! So that Dr. Bunte's contention that flame temperature enters in here very strongly is brought again to the fore.

One point of view is that we are carbon merchants, almost as much as are people who sell coal by the ton. It is *carbon density* in the gas that will eventually measure its value. I think you will find that, if you take natural gas where there is a great increase of hydrogen, you will not get as high illuminating value through a mantle from a cubic foot containing a thousand heat units, as you will with the same quantity of artificial gas where you have 670 heat units. To return to the comparison, the coal dealers carry their carbon in wagons at 2,000 or 2,240 pounds to the ton, that is, in a solid state; we convey our carbon in a fluid or gaseous state, with hydro-

gen as a carrier, but after all it is practically the same kind of a sale.

Mr. Litle: One point asked about is the lowest practical pressure to be used in connection with the inverted light. That varies with the gas. Carburetted water gas can be operated under lower pressure in an inverted burner than straight coal gas. I have seen burners apparently work pretty well with 1 inch pressure with carburetted water gas, with coal gas the pressure has to be about one and a half inch to work properly. That is the minimum pressure. However, I find that in most cities of the country so low a pressure is not considered sufficient for the consumer, and the tendency is to increased pressures. There are certain points in all localities where the pressure is likely to drop and where it drops below the above stated minimum pressures, you will have trouble with the inverted burners.

I should like to call your attention to another fact in this connection, that the inverted gas light will stand quite a range of variation in pressure and still operate apparently satisfactorily. A 25 per cent. variation in pressure will not interfere with good results, as far as the consumer can see, without re-adjustment of the burner, but a variation or change in the gravity of the gas proves very disastrous. If you set a needle valve, or the check of a burner, to pass a certain amount of gas at a certain pressure, the pressure can increase or diminish above or below that point for quite a range, and the effect will be simply to vary the candle power obtained. A well constructed Bunsen tube is in a sense automatic, that is, the higher the pressure the greater the amount of air entrained at the air ports, but the best Bunsen tube made will not take care of a variation in the gravity of the gas, and that trouble is experienced in places where mixed gases are in use.

Where water gas and coal gas are mixed and the proportion of the two gases changes during the day, there will be required a re-adjustment of burners, even though the pressure remains constant. Mr. Brown calls attention to an intensified lamp, the Keith lamp. I should like to say that I have had quite a little experience in high efficiency gas lamps,

working several years in this country with a lamp of about the same efficiency as this Keith lamp, and the lamp at the present time is on the shelf. I think this was due to the fact, as I have stated in my paper, that its very high efficiency was not absolutely necessary to hold down the business, because generally speaking, very highly efficient units have some drawbacks, and are not simple, because of the employment of some self-intensifying mechanism.

What I tried to bring out in the paper was the correct use of the units that we have to-day and also to draw attention to their abuse; that the best thing we have can be so abused as to be a bad lighting proposition, or it can be properly used so as to beat the very best lamp combination on the market. I will not back water for a single minute in the statement that the electrical man has simply been forced to deal with this matter in a different way, because he had a serious handicap. He always has had and still has.

In regard to arc lamps I hardly think that you will find many Tungsten arc lamps on the market. To simply cluster four or five Tungsten bulbs within a big globe, is permissible in some places to get artistic effect. That is done in this building, in the corridors and in the floors below, but when you come to commercial lighting—and I speak of commercial lighting as the principal lighting that you have to deal with—then I say that the combination is not sufficient; and I say further that any electric man will agree with me that he would rather have efficient reflectors in connection with this same high efficiency metallic filament lamp than to simply place his lamp within a large spherical or other shaped globe.

With reference to Mr. Barrows' question about the jump spark system, I would say that the spark points used have been carefully experimented with and we have not had any trouble in that connection. I should like to say, however, that I believe it necessary to have a certain supervision over such installations. I do not think it at all practical to put a jump spark lighting system into a consumer's store and then forget it, because he would likely not renew the parts at the proper time, and might allow the system to fall into disuse. I think it has been well demonstrated in connection with the gas arcs,

that the consumer will not properly care for his lighting fixtures and you have to do it for him, or at least help him. I believe that answers the questions.

THE PRESIDENT: There are three papers listed for this meeting, that will have to go over till to-morrow—"Physical Theory of Coal Carbonization;" "Vertical Retorts" and "Holder Cup and Tank Heating." The experience of this morning emphasizes my expressed hope that the papers to be presented at the next meeting be accompanied by carefully written abstracts.

(The President here gave out several notices, about the banquet, the Astoria trip, the West Point trip, and the revision of the discussions.)

The meeting is adjourned until 10 o'clock to-morrow morning.

THIRD DAY—MORNING SESSION.

The meeting was called to order at 10 o'clock.

THE PRESIDENT: We will listen to the report of the Bureau of Information.

MR. BAEHR:. (Reads report.)

REPORT OF THE BUREAU OF INFORMATION OF THE AMERICAN GAS INSTITUTE FOR THE YEAR 1908.

The Bureau of Information respectfully submits the following report upon the work accomplished during the current year 1908:

Up to the time of the meeting of the American Gas Institute in the fall of 1907, eight questions had been received by the Bureau of Information. With the exception of the eighth question, all of these were disposed of last year, leaving No. 8 to go over into the work of 1908. During this year the list of questions was augmented, with the last numbered question, to the date of writing this report, to No. 39.

The Bureau of Information for the year 1908 was organized and composed of nine members, as follows:

R. B. Brown,	F. W. Frueauff,	W. E. McKay,
J. D. von Maur,	J. M. Rusby,	H. L. Rice,
W. H. Gartley,	E. H. Earnshaw,	W. A. Baehr.

After the work had been started and questions began coming in in considerable numbers, it became apparent that too much work was going to be thrown on some of the individual members of this original Bureau. It was thereupon decided to add three additional names to the original nine, and upon approval of the Technical Committee this was done. The gentlemen referred to are as follows:

Henry I. Lea, V. F. Dewey, Geo. H. Waring.

This resulted, therefore, in the Bureau being composed of twelve members for the greater portion of the active work of the year.

The work this year was organized as follows:

Any question sent in was transmitted to the Chairman of the Bureau. If, in his opinion, the question was such as would not be in the nature of advertising or such as should not properly be submitted to a Consulting Engineer, it was then submitted by the Chairman to that member of the Bureau who, in his opinion, was best fitted to secure a prompt and accurate answer. The individual member of the Bureau, after receiving the question and making up an answer thereto, either from information at hand or as the result of experiment, thereupon mailed a copy of his answer to each of the other members of the Bureau, including the Chairman. Each other member thereupon made such comments on this answer as he saw fit, all such comments being forwarded to the Chairman.

The Chairman thereupon compiled the final answer for the Bureau, from the answer received from the individual member to whom the question was originally submitted, together with the comments received from other members.

As soon as the question had been received, provided it was not deemed to be of an advertising nature or such as would properly be submitted to a Consulting Engineer, it was sent to the Gas Journals and published. The idea of this was that anyone in the gas business or interested in the gas business, might submit an answer at large to any question which he saw published in the Journals. The Bureau had hoped that considerable interest might be taken by the fraternity at large in this work, and that many answers from this source might be submitted. We wish to report that this interest has been considerable, and the Bureau hereby wishes to express its thanks to the gentlemen who have contributed such answers.

When the Bureau made up its official answer to the question it thereupon forwarded this answer, together with any answers at large that might have been received, to the Gas Journals and the official answer together with other answers were duly published. In some instances it happened that an answer at large appeared to cover the ground satisfactorily, and this being the case, and upon approval of the members of the Bureau, this particular answer at large was published and ap-

proved by the Bureau as being a satisfactory answer to the question.

In order to make it an inducement for anyone in the gas fraternity to submit answers at large, it was decided that such answers at large would be published over the name of the individual submitting same. This was done.

As stated in a notice published in the Journals in the early part of the year, it was found that a number of questions which have been submitted were of such a nature that considerable experimental work was necessary in order that an answer might be made up. The Bureau wishes to report that a great deal of experimental work has been done in making up some of these answers, and a great deal of credit is due to the gentlemen who undertook this experimental work for the benefit of the Bureau of Information. The formal thanks of the Bureau to such members are herewith extended. It can be said with propriety that the individual members of the Bureau of Information have done a great deal more work in connection with this portion of the activity of the American Gas Institute than would appear from a mere inspection and reading of the report. It is easy to submit questions which require a great deal of study and work to answer, and considering the matter from this point of view, the Bureau would suggest that if the Institute desires to carry this work on in the future that it be understood that the membership of the Bureau should be ample to prevent any one member from being over-burdened with work.

A list of the questions received and the answers by the Bureau, together with the answers received at large, have been published and are herewith submitted in the body of this report.

It will be noted that a certain number of questions were marked "omitted," as being of an advertising nature or for other reasons. It has been the original policy of the Bureau that no question shall be answered which is of an advertising nature, or which would fall within the province of the Consulting Engineer, or which for various reasons, such as policy,

etc., were deemed as not being proper questions to answer. In some cases this decision was arrived at by the Chairman of the Bureau, but in most cases the entire Bureau was consulted, and the majority opinion prevailed.

In conclusion, the Bureau wishes to thank the fraternity for the interest shown and assistance given in this work, and begs to herewith formally submit this report.

September 21, 1908.

Very respectfully,

F. W. Frueauff,
W. E. McKay,
R. B. Brown,
J. M. Rusby,
H. L. Rice,
J. D. von Maur,
W. H. Gartley,
E. H. Earnshaw,
Henry I. Lea,
V. F. Dewey,
Geo. H. Waring,
W. A. Baehr, *Chairman.*
Bureau of Information.

QUESTIONS RECEIVED DURING THE YEAR.

Question No. 8.

Given a choice of three retort houses, one built with 22-ft. through retorts, the second with 15-ft. retorts and the third with 9-ft. stop-end retorts. The treatment of the gas beyond the stand-pipe is identical in the three works. The 22-ft. through retorts are charged and pushed by the machinery best adapted for them and the heating of these retorts is the best that can be secured in the present state of the art. These retorts have a stand-pipe at each end, which stand-pipes are kept clean by stokers in the usual way, assuming the best retort house practice in this respect, but not assuming any special machinery for reaming pipes. As the tendency of one of the pipes of each retort to do less than its share of the work is well known, ordinary watchfulness, such as might be expected in any well organized gas plant, is to be assumed as guarding against this tendency, but no extraordinary precautions, the successful application of which have not been proven in practice. The 15-ft. through retorts are assumed to be charged and pushed by the machinery best adapted to these retorts. The heating of these retorts is assumed to be the best that can be secured in the present state of the art. These retorts have only one stand-pipe. Both the 22-ft. through retorts and the 15-ft. retorts are charged as full of coal as the best practice would direct, there being no such limitations in this respect as with a retort where the coke cannot be pushed out. The stop-end retorts are also assumed to be charged by machinery and heated in the best possible manner. These retorts have one stand-pipe and they are charged as full as the process of withdrawing the coke with a machine rake will allow.

Neglecting all personal factors and assuming that each works is operated under conditions best suited to its equipment; assuming that the same coal is used in the three works and that this coal is a good grade of gas coal, such as the well-known gas coals of the Pittsburg field, and that the heats are carried in all three works so that the same yield of

gas per pound of coal is secured in each, which may in turn be assumed at 5 cu. ft. per pound; what difference of candle power and heat units may reasonably be expected in the finished product of the three works, because of their varying factor of retort lengths and what are the reasons for this opinion?

QUESTION NO. 9.

Omitted on account of being of an advertising nature.

QUESTION NO. 10.

Can the Bureau of Information inform me if there is any particular kind of anthracite broken coal particularly adapted for water gas manufacture? If so, from what region or vein is this coal mined?

QUESTION NO. 11.

What is the practice concerning the matter of insurance on gas plants of the latest fireproof design and where no wood enters into the construction and are there any companies carrying their own insurance or carrying no insurance at all?

QUESTION NO. 12.

What effect has temperature on the revivification of purifying material: (1) As to the rate of revivification, and (2) the minimum temperature at which the chemical reaction will take place?

Or, put in another form: What is the law of chemical reaction as regards temperature in the revivification of purifying material?

QUESTION NO. 13.

a. What is the variation in the amount of air put through the generator per blast, taking the first minute of the blast with the carburetter blast valve closed as unit?

b. Plot blast valve curve of water gas generator, using as ordinates the rate of blast in cu. ft. per minute and as abscissae the time intervals of one minute?

QUESTION NO. 14.

How many gallons of ammoniacal liquor of 10-ounce strength is it possible to obtain in practice from the various

gas coals in the United States? Assume that the different coals are used in the ordinary gas retort and that a good commercial yield is obtained for each particular coal in question. This information is desired in particular for Pittsburg, Virginia, West Virginia and Tennessee coal.

Question No. 15.

What is the process adopted and standard of testing the candle power of coal gas? Would a "Knott Jet Photometer" give as close a test as the process above referred to; if not, how close, approximately?

Is 16 candle power for coal gas the most economical for the consumer, both for fuel and for light used in mantle burners?

Would a change from 16 candle power of coal gas, either lowering or raising same, favor the consumer for fuel and light or would the above change benefit the fuel gas and be a detriment to the illuminating, or vice versa?

Question No. 16.

At what cost can hydrogen be produced? Has hydrogen in itself any illuminating value? Can it be compressed without losing its calorific value? Is it explosive like acetylene?

Question No. 17.

What is the plan of piping to use, to keep the water in the tank and cup of a 400,000 cu. ft. gas holder from freezing, in a locality where mercury drops to 30 degrees below zero?

Question No. 18.

Is the flame temperature of a bunsen flame greater than that of a luminous flame, provided the consumption and pressure are the same, and gas is burned under ordinary atmospheric conditions? Is a gas radiator equipped with a Bunsen burner more efficient than one equipped with a luminous burner?

Question No. 19.

Given any typical American city of 150,000 population and upwards, which is constantly growing at a rate which will

show an increase of population of at least 25 per cent. every 10 years, and assuming;

a. There is no gas plant in the city.

b. That a corporation, having ample resources, wishes to install a gas plant in this city.

c. That this corporation desires to start with a gas distribution system which can readily expand to meet the constantly increasing demands of the city.

d. That the corporation is governed by a policy through many years to permit following the given distribution plan absolutely as required,

e. That the use of gas will expand at about the same rate as it has since the year 1900, and

f. That this corporation is willing to go to any reasonable expense in the installation of the best distribution system that can be devised and be a commercial success, then:

What is the best distribution system to install? Give reasons and such general calculations which will show why you formed that conclusion. Consider the following kinds of gas distribution and any other types that may occur to you.

1. Low pressure from gas works.

2. Low pressure, installing district holders as city grows, pumping gas to district holder in any way you wish to calculate.

3. Low pressure, with medium pressure re-enforcement, say up to 10 pounds per sq. in., with district holders, and pumping plants at district holders for use during peak load, and with governors feeding into the low-pressure system at given distances apart, in addition to regular low-pressure supply from plants and holders.

4. Same as (3) without district holders, and all pumping at gas plants.

5. Medium pressure, say up to 10 pounds per sq. in. on entire system, with governors before each meter. No district holders.

6. Low pressure with feeders carrying, say from 10 pounds to 60 pounds per sq. in., with governors feeding into low-

pressure general system at given distances apart, and without district holders, and all compressing done at gas plants.

7. Same as (6) except using district holders with compressing plant for peak load use, and governors feeding into low-pressure system as in (6).

8. High pressure, say from 10 pounds to 60 pounds per sq. in. on entire system, with individual governors on each service. No district holders.

9. Such other systems as may occur to you.

It is to be understood that this is a general question, and not one for a consulting engineer. Assume the usual conditions of electrolysis incident to American cities.

Question No. 20.

How many pounds of water at a feed water temperature of 60 degrees. Fahr. can be converted into saturated steam at 150-lb. gauge pressure per 1,000 cu. ft. of water gas made, corrected to 60 degrees Fahr. and 30 in. barometer, by placing a tubular boiler on top of the superheater, and passing both the blast gases and carburetted water gas through it, assuming a boiler efficiency of 75 per cent. and under reasonable assumptions of operating conditions?

Question No. 21.

Under ordinary conditions of low-pressure distribution, what drop in gross B. T. U. per cu. ft. would you expect per mile from works holder, when making water gas only, and during the winter season with the atmosphere at an average temperature of about 32 degrees Fahr.? What when making one-half coal gas, and one-half water gas? What when making one-third coal gas and two-thirds water gas?

Question No. 22.

Can you give any instance of any attempts made in any city of the United States outside of Philadelphia where the gas company endeavors to preserve a constant candle power throughout the distribution system within reasonable limits, and under all conditions of weather and temperature? If

the gas is water gas, or mixed coal and water gas, how is this accomplished?

Question No. 23.

Will you state the relative illuminating efficiencies of the 8-ft. E. H. lava tip, the Sugg "D," Argand and the Carpenter burners, each consuming gas at the rate of 5 cu. ft. per hour?

1. On coal gases of from 8 to 18 candle power?
2. On water gases of from 15 to 25 candle power, these candle power ranges being based on determinations with the 8-ft. E. H. lava tip?

Question No. 24.

Can you give the comparative results of any experiments as regards fuel economy, clinker prevention, heat regulation, as well as other operating features, of the use of return flue gas as compared with preheated air and steam, on any recuperative benches in any gas plant where the results would be viewed as being worthy of careful consideration? Give data, if you will.

Question No. 25.

What rule and method should be followed in designing condensers to remove condensation resulting from compression of gases?

Question No. 26.

Is water gas higher in heat units than coal gas and if not, why not? Explain why it is richer in illuminating value.

Question No. 27.

We have a few cases where we have installed gas ranges, that we find the walls of the kitchen sweat very badly, and the installation of the gas range has been quite detrimental. We have exchanged stoves in some of the places where this complaint is and it does not remedy conditions; we have also ventilated the rooms more, and in one case, there is a register in the floor above, and when this register is left open the room above also sweats. How may this condition be remedied?

Question No. 28.

Concerning the deterioration of meter diaphragms and metal parts.

a. Do frequent changes in the kinds of oil in the water gas machine directly or indirectly impair the diaphragms in consumers' meters?

b. Would gas for a period of, say six months, containing hydrogen sulphide or carbon bisulphide to the amount of five grains per 100 cu. ft. damage the diaphragms and metal parts of consumers' meters to any considerable extent?

c. Does vaporized hydrocarbon, or gasoline oil introduced into gas mains for the purpose of freeing them from naphthalene have any bad effect on the diaphragms of consumers' gas meters, and how much?

Question No. 29.

Does very rapid condensation tend to reduce the permanent illuminating power of coal gas? Experience shows that the illuminating power of coal gas when condensed very slowly is considerably higher at the works than when the gas is condensed very rapidly. In the latter case, however, there is apparently much greater loss of illuminating power in distribution, especially in cold weather, due to the condensation of the heavier hydrocarbons. It is evident that it is possible to install gas-condensing apparatus costing less than half what the approved apparatus costs, but in which the work would be done very rapidly and also very efficiently so far as the use of cooling the gas is concerned. Would the use of such apparatus result in an appreciable loss of illuminating power at the consumers' burners as compared with the use of the present approved types of apparatus?

Question No. 30.

What is the relative value of enclosed and open 60-in. and 100-in. bar photometers?

Question No. 31.

(This question is omitted as being of an advertising nature.)

Question No. 32.

We are selling our lighting gas at $1.50 per 1,000 cu. ft. net and our fuel gas at $1 net, necessitating the double installation of meters for many consumers. We wish to put all the gas through one meter, but cannot afford to reduce the price of all our gas to $1, and do not believe it good policy to raise the price of fuel gas although this seems the only method to pursue. If you can tell us of some instance where the rate has been raised and with what results, or suggest some way in which we can eliminate the use of two meters, we shall very much appreciate the information.

Question No. 33.

It is reasonable to assume that gas is generally saturated with water vapor at the temperature at which it is metered and if so, should not this water vapor be taken into consideration in correcting to the corresponding volume of the gas at some arbitrary temperature, such as 60 degrees Fahr.? If such is the case, what is the proper correction formula; or will you give a curve showing corrections between 60 degrees Fahr. and 100 degrees Fahr.? The present practice at many modern gas works of purifying their gas at a high temperature makes the proper correction to be applied of great importance.

Question No. 34.

In general, have those interested in the gas business found the hygrometer described in the paper, "Delivery of Uniform Candle Power to the Consumers Through All Seasons of the Year," read before the Institute in 1906, a reliable and accurate instrument?

Question No. 35.

What specifications should be inserted in a long term contract for gas oil?

Question No. 36.

What is the mean spherical candle power of the standard candle? Is there any objection to taking readings of candle power at the angles used for determining mean spherical

candle power instead of every 10 or 15 degrees as is customary at present? It would greatly simplify the present method of determining M. S. C. P.

Question No. 37.

Will the Bureau of Information furnish me with the analysis of the fire brick that is considered of good quality for checker brick work in carburetter and superheater?

Question No. 38.

We have a greenhouse man here who is very anxious to heat his greenhouse with our 23 c. p. water gas, using it in a Boynton Furnace. We are advising against it but he says he will not object to paying up to $800.00 for the season. The greenhouse is exceedingly well built, mostly of glass with 5,500 feet of radiation which keeps it amply warm with soft coal.

The furnace is No. 191 as shown on page 40 of their 1905 catalogue.

We would expect to take him on at about an 80-cent rate. What is your opinion, should we come anywhere near $800.00 for the season? Are there any installations in use where artificial gas is used in hot water and steam residence work?

Question No. 39.

Omitted on account of being of an advertising nature.

ANSWERS BY THE BUREAU AND ANSWERS AT LARGE TO THE FOREGOING QUESTIONS.

The following answers by the Bureau, together with answers at large to the foregoing questions, have been formulated, published and are herewith submitted:

Question No. 8.

Answer by the Bureau of Information.

From the manner of the statement of this question, any answer thereto must be to a great extent academic, since there are no published data covering a direct comparison of the results under the limitations laid down.

There is enough exact knowledge of the results to be obtained from Pittsburg coal carbonized in 9-ft. stop-end retorts charged by machinery, to be able to state with confidence that the best average working under the conditions stated, would give a gas of about 15.5 candle power, flat flame measurement, with a heating value of about 625 B. t. u. per cu. ft.

The relative efficiencies for the through retorts would be affected by the following considerations:

1. Effect on the gas of greater lengths of travel in contact with the heated surface of retort.

2. Modification of this effect caused by reduction in area of gas space due to heavier charges in the through retorts.

3. Effect of such heavier charges on the quantity of gas produced.

Taking up these conditions in order, all authorities agree that the exposure of coal gas to contact with highly heated surfaces results in diminished candle power due to the "cracking" or "breaking down" of hydrocarbons to other forms, usually with deposition of free carbon.

Butterfield in "Chemistry of Gas Manufacture" 2nd edition, page 72, says:

"Little is known of the nature of the constituent hydrocarbons of ordinary gas coal. In certain rich coals hydrocarbons of the paraffin and olefin series are undoubtedly present, and their behavior under treatment to which coal is subjected in gas manufacture may be considered with advantage, being doubtless analogous to that of the constituents of ordinary gas coal.

"The higher members of the paraffin series of hydrocarbons (C_nH_{2n+2}) break down even at temperatures below their boiling points under normal pressure, to lower hydrocarbons of the olefin series (C_nH_{2n}), thus

$$C_N H_{2N+2} = C_n H_{2n+2} + C_n H_{2n} \text{ where } 2n = N$$

Assuming that this action occurs when a high temperature is applied to the lower members as well as the upper, we should find the higher paraffins resolved chiefly into ethane

and ethylene. Now at a red heat ethane yields methane, carbon and hydrogen, thus:

$$C_2 H_6 = C H_4 + C + H_2$$

From paraffin hydrocarbons we should, therefore, expect to obtain the gases methane, ethylene and hydrogen and a deposition of carbon.

"The hydrocarbons of the olefine series break up at a red heat to lower members of the same series, to members of the acetylene series, to methane and other paraffins in small quantity. Thus from ethylene are obtained methane, acetylene and smaller amounts of ethane and other hydrocarbons. Now acteylene at a red heat polymerizes to benzine, and thus a new series of hydrocarbons is introduced. We have seen that acetylene readily polymerizes to benzine, and either indirectly or directly this body is formed at a red heat from the vapors of most methane derivatives. Together with it are formed some of its homologues, also diphenyl, naphthalene, anthracene, phenanthene and other products containing either a benzene nucleus or condensed benzene nuclei. It is a commonly observed fact that the yield of benzene and other aromatic hydrocarbons is greatest when the heat is intense or its application to the vaporized hydrocarbons prolonged, and this is in accordance with the principle that benzene is formed at a higher temperature than the gaseous methane derivatives, and that it is probably the result of a secondary action."

The total loss in heating value due to such "cracking" is quite small in comparison to the loss in candle power. For example:

$C_2 H_4$ cracked by heat to $CH_4 + C$ or
$C_2 H_6$ cracked by heat to $CH_4 + C + H_2$

would suffer almost total loss of candle power, but the resulting gaseous products would retain all but 30 per cent. of the original heating value in the first instance and all but 25 per cent. in the second. As a matter of fact, the reactions that actually occur in the breaking down process are quite complex, but the main effect as indicated above sufficiently illustrates the principle involved.

The extent to which a gaseous hydrocarbon will suffer decomposition by contact with surfaces heated to a certain temperature, is a function of the time of exposure to such contact, and this again is controlled by the relation of area of surface to speed of flow.

In a through retort with two stand-pipes, it always happens that one pipe or the other takes most of the gas, so that the distance through which the gas must travel to reach the stand-pipe would be for most of the gas produced in the 22-ft. retorts at least equal to the length of travel in the 15-ft. retorts; it is reasonable to suppose, therefore, that the cracking effect on the gas would be approximately alike in each case.

The heavier charges in the through retorts decrease the area of exposed heated surface as compared to stop-end retorts, and we may safely assume that the increased speed of flow will compensate for the greater length of retort and so equalize the cracking effect of contact with heated surface that there will be very little difference in quality due to this cause.

As to the effect of heavier charges. Experience has demonstrated that small retorts run at moderate heats and charged by hand with light charges are capable of giving better results in yield, quality of gas and quantity of residuals than the larger retorts charged by machinery and run at higher heats. Coal in a thin layer parts with its volatile constituents quickly and uniformly, but in larger masses the heat penetrates slowly to the interior of the charge, with the result that the center is not well coked while the parts nearer the heat may be exhausted of gas to an injurious extent. It is an axiom in retort-house practice that the results from two retorts, one too much burnt off and one too little, cannot average up to the results from two retorts each properly burnt off; and this principle applies in some measure to heavy charges and would result in diminished candle power for the same yield of gas per pound.

The final theoretical conclusion to be reached is that, under the condition stated in the question, gas made in either the

22-ft. or the 15-ft. through retorts will be lower in candle power by probably not more than one-half candle than gas made in the stop-end retorts, and that the heating value will not be materially different.

There seem to be some practical results which do not bear out the above theoretical conclusion. From results obtained in long through retorts in the vicinity of Boston it would appear that the gas made therein need not be less in quantity nor lower in candle power than the gas made in the stop-end retorts.

Another direct comparison between stop-end and through retorts was made in the West side Milwaukee plant, where with two duplicate units maintained independent from retort to the holder they ran for a time with one stack of benches operated as 9-ft. 6-in. stop-end retorts and the other stack exactly the same, operated as 21-ft. 9-in. throughs. They found that with similar heats and similar charges there was a slightly lower candle power obtained from the throughs than from the stop-ends, the heating value, however, ranging from equal to 5 per cent. higher. With heavier charges in through retorts they were apparently able to obtain practically the same results as from the stop-ends though at times a slight falling off in the candle power was noticeable. It is but fair to the through retort to say, however, that they were not able to fill them as full as they should have been filled, due to the character of the discharging machinery which they were then using. In the through retort used under its most favorable conditions, discharging by pusher and with charging machines capable of laying a maximum charge in the retort the condition as to everything but yield should be improved from what practice in Milwaukee actually shows, and it can, therefore, be assumed that with the improvement due to shorter time contact between the gas and the heated arch of the retort that practically identical candle power results might be expected, assuming, of course, that both types of retorts were operated to their maximum capacity.

There is always more difficulty experienced in burning off

the heavier charges employed in the through retorts and it is found in practice that it is advisable to increase the carbonizing period slightly to obtain equally good results.

So far as the stand-pipes are concerned it was found by an elaborate series of tests in Milwaukee that the gas always went out unequally at the two ends of the retort, but that by using ordinary diligence in keeping the pipes clean the variations in temperature of the gas ascending the two stand-pipes seldom was very great, and the average temperature always was lower than with the stop-ends, and at that time they were operating under exactly similar conditions in the adjoining stack.

It does not appear amiss to the Bureau in answering this question to call attention to the great practical advantages to be derived from the use of through retorts, the simplification of machinery, the ability to use types of machinery which do not leave the retorts open at all, the greater ease of decarbonization of retorts and patching the same when necessary, the smaller investment for bench iron work, decreased hydraulic main maintenance, greater output per given area of land or of retort house, the carrying out of coke on one side of the stack, cutting down the expense of installation and of handling and keeping the coke and the resultant smoke, coke dust and steam away from the side of stack on which the operating machinery is located, and the material reduction in the number of men required to operate the benches.

As to further literature bearing on this subject the Bureau wishes to call attention to a paper read by Mr. B. O. Tippy before the Michigan Gas Association, February 22, 1899, and published in the American Gas Light Journal, March 20, 1899, and in the Progressive Age, March 1, 1899.

Answer at Large.

By Frederick Egner, Norfolk, Virginia.

In this question you have briefly but comprehensively described three styles of retort houses, limiting the operations and results closely and leaving nothing to be answered but, "What difference of candle power and heat units may reason-

ably be expected in the finished product of the three works, because of their varying factor of retort lengths and what are the reasons for this opinion?"

While in the course of my practical life I have had charge of operations of coal gas works ranging from one with only two benches of "threes," making not over 18,000 cu. ft. of gas per 24 hours from very poor Missouri coal, up to works with 840 retorts in action, using good Pennsylvania gas coals and with direct fired, generator heated, and recuperator furnaces, and some with stoking machinery, I have had no experience in three such works as are described in the Bureau's question, and only one who has had this experience could possibly answer the question with some degree of certainty. I have, of course, visited and talked with men who have operated one or another of the types you described and have found that "Doctors differ" in their opinions on the subject, and with considerable vehemence assert their point of view.

Your question is, as I see it, purely a theoretical one which, because of the reasons I have given, I feel unwarranted to venture to decide. But if you will permit me, I beg leave to say, that in view of the now well demonstrated fact that all of our old knowledge relating to what is going on in a retort where coal is being coked and gas evolved is a knowledge of what has been—but better had not be continued to be done—it appears a mere waste of valuable time to speculate upon the question No. 8 submitted to your Bureau.

I now refer to the clear, thoroughly established results with the vertical or standing retort system as first operated at Dessau, then Berlin, Cologne and many other cities, where it is shown that with a retort house occupying no greater ground space and costing not much more, and with a retort system alleged to cost no more per unit of gas produced, the results are: (1) Better gas from the same kind of coal. (2) Better and more coke. (3) Better and more tar. (4) More ammonia, from 35 per cent. to 55 per cent. (5) Fifty per cent. and over less sulphur compounds to be removed from the purifier. (6) No naphthalene at all. (7) No stopped

standpipes. (8) The utmost possible economy in labor. As by reason of the difference in position of the retorts and consequent difference in the chemical changes going on in the vertical as compared with the horizontal retort, these magnificent results are obtained, I think it just a waste of time to discuss the horizontal retorts in any shape, with or without machinery, for large, medium or small works and the sooner all concerned will wake up to these facts the better for gas companies and their stockholders.

Question No. 9.

Omitted on account of being of an advertising nature.

Question No. 10.

Omitted. See question.

Question No. 11.

Answer by the Bureau of Information.

In compiling an answer to Question No. 11 the Bureau of Information found itself confronted by a number of complicated reports and opinions. The best of the data available, however, seems to indicate that only recently very few gas companies who have fireproof, or so-called fireproof construction, carried any insurance. At present there seems to be a tendency to carry some insurance on fireproof buildings, due to the number of bad fires with consequent damage in buildings which were believed to be entirely fireproof. Many insurance companies are making extremely low rates to attract this class of business and many gas companies seem to look on it as a wise expenditure to take this extra precaution.

On the one hand, the experience of some companies is such that to their knowledge the actual damage from occasional fires is so small that it has not resulted in any change in the policy of not insuring gas works. On the other hand, the experience of others is to the effect that there are a number of cases of damage by fire to the buildings of even fireproof construction to warrant any company to provide against possible damage.

In most plants there are some parts of the works that are

not fireproof, such as coal trestles, small buildings, etc., but most companies carry ample insurance on this part of their plant.

The Bureau is able to cite the experience of the Western United Gas and Electric Company which has carried its own fire insurance for over three years. The four works of this company are generally fireproof, but the general comments made as to small buildings, trestles and coal sheds are fully applicable. In addition to its works the company owns a number of office buildings, none of which are fire proof, although all but one are of good solid brick construction.

The widely scattered property of this company which operates in over thirty cities and towns, offers probably the ideal opportunity of self-insurance. All possible precautions against fire and for the quick extinguishment of incipient fires have been taken and the company has been fortunate in that no loss has occurred. This fund now amounts to about $20,000 and the company feels reasonably secure. During the early period of this fund outside insurance already in force was continued, the policies being gradually canceled as the fund was strengthened.

Outside insurance is also carried on three buildings owned by the company but leased to other parties, for the reason that each represents a large possible loss and the company cannot control the precautions to be taken against fire by the occupants.

The self-insurance thus undertaken by the company covers only fire insurance and the fund is not designed to be used at any time for any loss that would not be paid by a fire insurance company under the standard form of policies. The company carries boiler insurance in an outside company but does not carry liability insurance. The insurance fund draws interest, which is credited to the fund, and in due time it is expected that, with good fortune, the fund will be self sustaining.

The Bureau wishes to call attention to the three answers received at large, which it recommends for careful consideration to all interested.

Answers at Large.

By Independence Inspection Bureau, Philadelphia, Pa.

Conditions covering fire insurance on gas plants are noticeably changing and improving. In the past, fire underwriters, realizing that they had little or no experience to guide them, were fearful of the special hazards inherent in this class of property, and magnified the importance of these hazards. As a result, insurance rates were arbitrary, and as time went on, have been proven excessive in many instances. It remained for someone to tabulate the fire experience of such plants; to study the causes of fires therein; and to ascertain how the outbreak of such fires could reasonably be prevented, and if not entirely eliminated, properly controlled.

It is a fact that many fires and occasional explosions take place at gas works, and that the majority of such could have been easily prevented. If fire insurance could be correctly adjusted to the hazards of individual risks, there would be just as much reason for insuring one property as another. Even the so-called "fireproof" plants are found on careful examination to have many opportunities for damage by fire which they can be insured against. The desirability of insurance on such plants is, therefore, largely dependent upon the rate of premium charged.

It has been the unique work of this bureau, working as specialists in the prevention of fires solely for the property owners, to study exhaustively the fire risks of gas works. This has resulted in the preparation and classification of a list of the causes of fires at gas works and the proper preventative measures applicable to each. This study involves building construction; fire division; and care of special and ordinary hazards of occupancy, fire protection and fire alarms.

It is very interesting to observe that a large number of gas works fires are due to very ordinary causes such as heating, lighting and power systems or poor housekeeping, just the things which statistics show also cause a large number of fires in other properties of special occupancy. For this reason a large part of the fire danger can be eliminated from the

average plant without any hampering of operating conditions or any material expenditure of money. Our clients have found such examinations to be "worth while" even at their so-called "fireproof" properties as they discovered in time an unexpected amount of combustible material and unthought-of opportunities for annoying fires even at these buildings of superior construction. It is usual to find in conjunction with these plants a number of outbuildings, coal trestles and minor structures which are not in the least fireproof, and then certain rooms in the better buildings contain a considerable amount of combustible material.

A wide experience in the service of the owners of such properties such as the United Gas Improvement Co., of Philadelphia, and the People's Gas Light & Coke Co., of Chicago, shows that the insurance companies, when properly approached, are willing to make at least very material reductions from existing rates on gas works; and in doing this they take into consideration both fire experience of the past and the individual merits of each plant.

It would seem to be a wise step to have careful examination made of each property no matter how well constructed, in order to learn what opportunities for fire really exist, and so as to enable the taking of such intelligent precautions as may be deemed wise against property loss and interruption of business; and also at the same time to ascertain the lowest rates of insurance and the broadest forms of policies obtainable for the insurance interests.

By John S. Zimmerman, Chicago, Ill.

In regard to the recent practice of the People's Gas Light and Coke Co. as concerns fire insurance, I beg leave to submit the following data:

Prior to the practical consolidation of the various gas companies now operated under the charter and title of the People's Gas Light and Coke Co. there seems to have been no uniform or established method of action in this matter. Each company had its own notions and pursued them irre-

spective of the ideas of every other one; and for some years after the consolidation (owing to a variety of reasons), the matter was allowed to run along, practically in the same lines with the several plants and detached properties of the various constituent companies. In the year 1905, however, I was called upon to analyze and make a general report on the whole subject, which afterwards was taken up by the board of directors, and the following general conclusions were reached:

First, that we should discontinue the practice of general fire insurance; maintaining it only on such places as were considered extra hazardous risks, and setting aside each month a given sum (in lieu of insurance premiums saved), the accumulations of which would offset any losses which might occur upon non-insured property.

It was determined for the future that none of the gas manufacturing plants, used solely as such, should be insured at all; and, it was further decided to employ an insurance expert familiar with all the rules and requirements of the Board of Underwriters, and, guided by his advice, that all changes of construction and storage of contents which would effect a practical reduction in the net cost of insurance should be made.

In addition to this, it was recommended that all policies should be made to expire upon the same date in each year (as nearly as possible for the time being), in order to determine more exactly the proper amount to be carried at each place; and the average annual cost of the same.

Since the adoption of this policy it has been the aim of the company to use only the best fireproof construction (approved by the Board of Underwriters), thereby securing the lowest legitimate rates.

It is our practice to insure our buildings, furniture and fixtures for terms of from three to five years, thus effecting a saving upon the annual cost; while the contents are insured, as usual, for one year, upon a basis of 80 per cent. of the actual cash value of the average stock carried in each place. The figures in each case being derived from the previous year's monthly statements of stock carried at the respective

locations, modified, of course, by subsequent changes which may have occurred.

As said before, no insurance whatever is placed upon the various manufacturing plants; nor upon the coal, coke, oil or other materials therein stored for daily use. On all other places, however, the usual policy of placing 80 per cent. of the proper value is pursued, but always complying with the rules of the Board of Underwriters, so far as they will result in a reduction of the cost of insurance. Thus far the present system has worked satisfactorily; but the test of time alone will prove up actual working results.

By C. L. Holman, St. Louis, Missouri.

Concerning the practice of the Laclede Gas Light Co. with respect to insurance on gas plants, I wish to submit the following:

The Laclede Gas Light Co. insures all structures that are not of fireproof or slowburning construction, and their contents, under the 80 per cent. co-insurance clause, but excludes cost of excavation, foundations, concrete and brick floors, as well as contents of buildings which are of such a nature as would not render them liable to serious damage in case of fire.

A reserve fund is carried to provide for any loss which may be sustained, not fully covered by policies. The amounts of the policies are, of course, decreased from time to time to meet changed conditions in quantity or value of property.

All policies are made to expire on the same date each year. It is the intention hereafter to use one general form to cover all property of the company, excepting live stock, which may be transferred from one stable to another. To cover such cases, a separate policy will be carried.

Insurance is carried on all boilers, and on elevators in general office building, but no other liability or indemnity insurance is in force. No insurance is carried on coal or coke stored in open yard.

Question No. 12.

Answer By the Bureau of Information.

On account of the present lack of knowledge of the law of revivification of purifying material, and owing also to the lack of exact experimental data, only a general answer can be given, which is borne out by the experience of various gas engineers.

The generally accepted formula for revivification is:

$$2\ Fe_2S_3 + 3O_2 = 2\ Fe_2O_3 + 3\ S_2$$
$$12\ Fe\ S + 9\ O_2 = 6\ Fe_2O_3 + 6\ S_2$$

These two chemical reactions take place with the generation of considerable heat. All purely chemical reactions are promoted by heat and advantage is commonly taken of the heat evolved in the revivification reaction to promote the reaction itself by working the oxide in mass. If foul oxide be spread very thin and exposed to a low temperature, reaction will start, but will be greatly retarded and continue feeble and slow, and in proportion as the temperature is allowed to increase the intensity of the reaction will increase, the safe limit of temperature to be allowed being found at a safe distance below the fusing point of sulphur, which is 239 degrees Fahr. Opinions of different men vary in this respect and the upper limit is placed at from 100 degrees to 180 degrees Fahr., the general opinion seeming to point at 120 degrees Fahr. as the temperature at which revivification will progress most satisfactorily.

In regard to the minimum temperature at which the revivification can be effected, it is stated that if the oxide is in the open air and exposed to sunlight, it is an open question as to whether there is any minimum temperature in average practice. In sunlight, oxide will be revivified in freezing weather, indeed the sun's rays are always a very important auxiliary in starting and continuing the most satisfactory revivification of the oxide.

When considering some hard and fast rule covering the relation of temperature to speed of revivification it should be borne in mind that probably no two samples of purifying ma-

terial are ever alike, and no one sample is ever the same at different exposures. The complete chemical reactions are in doubt and about all that can be said is that revivification will always be more rapid and complete the higher, within reasonable limits, the temperature of the oxide. Therefore, the treatment should be such as to retain as far as possible, in the material, all the heat generated by the chemical reactions that occur, provided, of course, that this heat is not excessive.

From the information at hand the Bureau believes this subject to be one open for experimental determination, and desires to suggest this to anyone in the gas fraternity who may be able and willing to undertake such work.

The Bureau wishes to call attention to the two answers received at large, which it recommends for careful consideration to all interested.

Answers at Large.

By C. J. Ramsburg, Philadelphia, Pennsylvania.

Upon removing the fouled oxide from the purifying box, the material consists, for the most part of two substances—combinations of iron and sulphur, Fe_2S_3 and Fe S. When these two are exposed to the oxygen of the atmosphere, the following reactions take place.

$$2\ Fe_2S_3 + 3\ O_2 = 2\ Fe_2O_3 + 3\ S_2$$
$$12\ Fe\ S + 9\ O_2 = 6\ Fe_2O_3 + 6\ S_2$$

It would seem a very simple matter then to take this material, spread it out and allow the action to proceed. In practice, however, there are some features of the procedure that are worthy of notice and to which the writer of this question is evidently referring.

It is a well-known fact that Fe_2O_3 is a very poor purifying material, unless it contains water of hydration, and in proportion to the amount of this water in the molecule, the activity of the material for the removal of hydrogen sulphide is greatly increased. If the temperature of the mass in revivification reaches a point at which this water of hydration is decreased, the activity of the material will fall off accordingly,

and at 212 degrees Fahr. all of the water will be driven off. This marks the high danger limit in permissible temperatures during the revivifying process. Again, it is known that if the temperature falls to near the freezing point, the chemical activity, by which the sulphide is converted into oxide of iron, is reduced to such an extent as to be negligible.

The best results from revivification are to be experienced when the oxide is not permitted to vary much from 90 degrees to 120 degrees Fahr., under which circumstances the reaction will take place quickly enough not to make it necessary to keep the material out of the box too long, and that the ferric oxide formed will be in a high state of hydration.

With this knowledge in mind, the following point of good practice may be noted: Oxide should never be expected to revivify at a proper speed in a temperature below 60 degrees Fahr. It should be spread out, not piled up. It should be watched so that the temperature should not get over 125 degrees Fahr., at which temperature it should be subjected to liberal use of water.

It might be noted in passing that oxide, which shows a very poor activity the first time it is placed in the boxes, is often found to be much more active upon the second fouling, the reason for this being that what ferric oxide was affected by hydrogen sulphide in the first fouling became well hydrated in the revivification.

By Charles J. O'Donnell, Philadelphia, Pa.

I call your attention to the following question and answer which has been offered by the Trustees' Educational Fund, and while not exactly the same question yet it has some bearing along these lines:

Question.—What is the influence of heat upon the chemical reactions that occur in the purifier and what bearing does this influence have upon the question of the heating of purifying houses, lime rooms and revivifying sheds?

Answer.—The chemical reactions occurring in the purifiers between lime or ferric oxide and the sulphuretted hydrogen

(and in the case of lime, to carbonic acid, also) in the gas, are rendered more rapid and complete by heat.

It has been found that at temperatures below 32 degrees Fahr. both CaO and Fe_2O_3 are practically inactive, with reference to H_2S; and that as the temperature increases, more and more of the impurities are absorbed, until at temperatures of 100 to 120 degrees Fahr. the action becomes as complete as can be made under working conditions.

It follows from this that to secure good results in purification purifying houses, lime rooms and revivifying sheds should always be maintained at a temperature not lower than 60 degrees Fahr., and further advantages may be derived from heating the gas itself, as it enters the purifiers, to a temperature of from 100 to 120 degrees Fahr.

Question No. 13.

Answer By the Bureau of Information.

In answering Question No. 13, the Bureau wishes to submit data obtained from four works located in widely different sections of the country. Certain general ideas must be observed in connection with the answer to this question. In general the amount of reduction in the quantity of air admitted to the generator in each succeeding minute of the blast must be influenced at different works, even in the same diameter generators.

1. By the size and quality of the fuel which would determine the area of the interstices.

2. By rate of admission and point or points of admission of secondary air.

3. By variations in the proportions of the checker brick chambers and the spacing of the checker brick at different works, which would influence the back pressure.

In the same machine, using the same fuel and having the same spacing of checker brick, the cleanliness of the checker brick is a factor.

The accompanying table gives the rate of admissions of air at four works, in the first three of which different methods

Table with Answer to Question 13

BUREAU OF INFORMATION A. G. I.

Showing quantities of Generator Blast admitted each minute of blow in four generators operated under different conditions as existing in practice.

	WORKS A			WORKS B			WORKS C			WORKS D		
Area of Grate	12.57 Sq. Ft.			44.18 Sq. Ft.			50.25 Sq. Ft.			54.19 Sq. Ft.		
Length of Blow	5 Minutes			4 Minutes			4 Minutes			4 Minutes		
Admission of Generator Blast	Cu. Ft. per Min.	Per Sq. Ft. of Grate	Per Cent	Cu. Ft. per Min.	Per Sq. Ft. of Grate	Per Cent	Cu. Ft. per Min.	Per Sq. Ft. of Grate	Per Cent	Cu. Ft. per Min.	Per Sq. Ft. of Grate	Per Cent
End of first half minute without carburetter blast in cu. ft.	1475	117.3	100	3750	84.8	100	6340	126.1	100	6752	124.6	100
And the end of 1st minute with carburetter blast on	1215	96.7	82.4	3475	78.6	92.7	5620	111.8	88.6	5814	107.3	86.1
Same at end of 2nd min.	1210	96.2	82	3250	73.5	86.7	5560	110.6	87.7	5727	105.7	84.8
Same at end of 3rd min.	1205	95.8	81.7	3125	70.7	83.4	5460	108.6	86.1	5620	103.7	83.2
Same at end of 4th min.	1160	92.3	78.7	3100	70.1	82.7	5400	107.4	85.2	5550	102.4	82.2
Same at end of 5th min.	1150	91.5	78									
Kind of Generator Fuel	Anthracite Broken			Anthracite Broken 40% Hot Coke 60%			Connersville Soft Coke			Cold Coke direct from retort house not screened		

of blasting, different diameters of grate, and different fuels were used. Data for Works "A," "B" and "C" shows a certain practice whereas Works "D" shows a different practice. In Works "A," "B" and "C" the generator blast valve was maintained at a constant point, the pressure at the outlet of fan was constant, and one fan supplied air solely to the apparatus from which the readings were taken.

In Works "D" the figures obtained are averages from 48 consecutive runs. These results were obtained from a 11-ft. machine. It is found that the rate of flow of air per minute at the end of the first half minute, without carburetter blast, decreases 11 per cent. in forty-three runs; that the difference at the end of the first minute with carburetter blast on for the same length of time, was 7 per cent.; same at the end of the second minute was 8 per cent.; same at the end of the third minute was 4.6 per cent.; same at the end of the fourth minute was 4.5 per cent. It was found that the decrease in the total amount of air per blast, or at the end of the forty-three runs was 8 per cent.

During this test at Works "D" the length of blow was four minutes and the length of run 8 minutes. The weight of steam per minute was 60 pounds, or 480 pounds per run. The method of running was one up run, two down runs, one up, etc.

Question No. 14.

Answer By the Bureau of Information.

There does not seem to be any data extant that will give the amount of ammoniacal liquor that is possible to obtain in practice from the various gas coals in the United States, when the retorts are operated with a view to getting all possible ammonia from the coal.

From the experience of competent coal gas superintendents, who have used several of the different coals enumerated in the question, we are advised that in practice the difference in the yield of ammonia, directly traceable to the coals themselves is not noticeable.

When it is taken into consideration that of the 1½ to 1¾

per cent. of total nitrogen in the coal only about 0.25 per cent. goes to the formation of ammonia, it will be seen that the question is difficult to answer.

There is enough nitrogen in these coals to form at least 25 pounds of ammonia. Most superintendents in forcing their plants to get maximum efficiency in other directions are well satisfied when they obtain five pounds of ammonia per long ton of coal. Five pounds of ammonia would be contained in 23⅓ gallons of ten-ounce liquor.

The inquirer is advised to refer to an article entitled "The Recovery of Nitrogen in Coal Distillation," by Messrs. Anderson and Roberts, American Gas Light Journal of February 5, 1900.

The yield of ammonia differs according to whether the coal was carbonized.

a. In a coke oven.
b. In a horizontal retort.
c. In an inclined through retort.
d. In a vertical retort.

In each case it would be further complicated by

1. Size of retort.
2. Weight of charge.
3. Length of burning.
4. Heats carried.
5. Physical conditions of coal.

The formation of ammonia from the coal is said to begin when the temperature of the coal reaches 350 degrees Cent. and disassociation again goes on when the temperature has reached 550 degrees Cent.

Question No. 15.

Answer By the Bureau of Information.

The use of any jet photometer for determining the exact candle power of any gas is not to be recommended. It is not even to be countenanced. Jet photometers do not measure the intensity of light at all, but simply rely upon the height of flame under a given pressure, or the pressure required to produce a given height of flame, to indicate the approximate

candle power of the gas. That is to say, any jet photometers of the Knott type in which there is a governor that maintains a constant pressure under the tip, an increase in the candle power of the gas is presumed to give an increase in the height of the flame. In some cases this is true and in some cases this is not true. The height of the flame depends primarily on the quantity of air necessary to consume the combustible gases. An illuminating gas is made up of different constituent gases, each of these gases requires a different quantity of air for its combustion. If the proportions of these constituent gases are changed, there will be a different quantity of air required, therefore a different height of flame will result, without regard to candle power.

In the case of a works using the same materials and producing a gas of the same diluent gases, such as hydrogen, Marsh gas, carbon monoxide—always in equal proportion, the amount of air necessary to complete combustion increases with the illuminating hydrocarbon gases and vapors present, and in such a case the Jet photometer may be used to roughly indicate the increase or decrease in candle power.

The standard for testing the candle power of coal-gas, or any gas, is by means of a bar photometer. The inquirer is referred to the top of page 478 of the Proceedings of the American Gas Institute for 1907.

The lower the candle power of coal gas the lower will also be its heating power. It is also an established fact that gas of lower heating power will yield less light per cubic foot of gas burned when it is consumed in a Welsbach burner. Some articles by St. Clair Deville, published in the London Journal of Gas Lighting of September 3 to September 24, 1907, seem to show that the light yielded per cubic foot of gas in the Welsbach burner is about proportional to the heating power of the gas; for instance, a gas of 20 per cent. less heating power would yield, approximately, 20 per cent. less light per cubic foot of gas.

From the foregoing it seems that the heat value of a high candle power gas is higher than the heat value of a low candle

power gas; the low candle power gas usually has a lower value to the consumer both for heat and for light than the high candle power gas, but the value of the gas to the consumer does not vary directly as the candle power.

The Bureau is unable to give any data showing a compari-

AN ATTEMPT TO STANDARDIZE THE LOW JET PHOTOMETER

Old Coal		New Coal		Water		Mixed		Mixed	
Bar	Jet	Bar	Jet	Bar	Jet	Bar	Jet	Bar	Jet
17.42	11.00	18.50	13.70	22.98	12.00	19.31	13.00	18.50	14.80
20.80	11.30	18.05	11.20	24.13	13.80	19 72	12.20	18.89	14.60
18.81	12.60	17.30	11.40	24.20	13.50	20.19	12.50	19.41	14.60
19.21	13.80	17.82	13.80	24.19	14.00	19.54	14.20	19.25	13.80
20.74	15.80	15.68	12.60	24.55	16.50	19.51	12.30	19.29	13.80
20.34	15.20	17.28	14.00	23.54	13.80	20.10	12.00	18.98	14.20
18.98	14.60	17.64	13.60	23.21	12.80	19.73	13.80	18.51	11.20
20.20	15.30	17.35	12.50	23.32	13.00	19.74	13.00	18.15	12.00
16.29	11.20			23.13	11.40	19.47	12.80	18.38	14.00
20.82	15.00			21.95	13.00	19.45	12.60	18.01	12.60
15.07	11.20			23.70	13.70	18.98	13.00	18.11	12.80
21.75	15.80			23.94	13.60	18.96	12.90	18.30	12.40
18.08	14.20			23.38	15.10	19.11	12.30	18.59	13.20
20.46	15.10			23.86	12.40	18.88	12.80	18.72	12.00
20.46	15.10			24.55	13.50	19.04	12.70		
20.80	17.90			23.59	12.70	18.36	12.00		
				23.86	12.80	19.00	13.90		
				22.37	14.80	19.45	11.00		
				22.79	14.40	19.33	11.20		
				23.35	14.80	19.85	12.20		
				23.93	11.50	20.36	14.20		
				24.46	11.20	19.81	12.80		
				23.30	11.20	19.91	12.20		
				25.44	15.40	18.15	12.80		
				24.38	12.80	17.96	12.40		
				24.50	15.20	18.50	13.40		
				24.24	12.60	19 04	12.40		
				24.60	12.00	18.60	12.00		
				22.16	12.40	18.69	11.60		
				22.53	13.00	18.70	11.00		
				22.78	14.20	18.66	11.40		
				21.76	14.80	18.77	11.80		
				23.05	14.40	17.85	11.60		
				22.13	13.70	18.24	11.60		
				21.87	13.60	18.09	12.00		
				22.84	13.80	18.44	13.00		
				22.48	12.60	22.92	11.80		
				21.51	13.20	19.12	12.80		
				23.38	14.00	18.73	13.20		
						19.18	12.00		
						19.63	13.00		
						19.77	12.44		
						19.00	12.00		
						18.30	14.60		

son between the Knott Jet Photometer and a bar photometer but data is given herewith which gives the results of a set of tests which attempt to standardize the Low Jet Photometer. The data shows how widely varying results are obtained with the jet when compared to the bar photometer. The burner used on the bar was Carpenter's Metropolitan Argand No. 2.

Unfortunately the time for carrying out experiments was so limited that the Bureau is unable to report a conclusive set of tests and the following figures are, therefore, to be regarded largely as a single set of tests, and, therefore, corresponding weight must be assigned to same.

Question No. 16.

By C. C. Tutwiler, Philadelphia, Pa.

Cost of Producing Hydrogen Electrolytically.—In a paper read by Dr. O. Schmidt before a meeting of the German Electrochemical Society in Zürich (See London Journal of Gas Lighting, January 1 and October 15, 1901) it is stated that by the electrical decomposition of water using soda as the electrolyte, 168 litres of hydrogen and 84 litres of oxygen can be produced per kilowatt-hour. It was proposed to compress the gas to 150 atmospheres and use it in Welsbach mantles for isolated lighting. The cost of power for compression was said to be about 5 per cent. of the cost of power for production; therefore, 1,000 cu. ft. of hydrogen would be produced and compressed to 150 atmospheres at an expenditure of 177 kilowatt-hours.

A full description of a second method of manufacturing electrolytic hydrogen known as the Garuti process will be found in the Scientific American Supplement (June 27, 1903). Working figures on this process show results closely corresponding to those obtained by the Schmidt process; a yield of 166 litres of hydrogen and 83 litres of oxygen being claimed per kilowatt-hour, or 170.5 kilowatt-hours per 1,000 cu. ft. of hydrogen. The cost of maintenance is said to be very small since only the anodes have to be renewed and last three years.

By Action of Acids on Metals: a. *From Zinc and Sul-*

phuric Acid.—The cost of producing hydrogen by acting on zinc with sulphuric acid for raw material alone will be about $13 per 1,000 cu. ft. of gas as follows: According to the reaction

$$Zn + H_2SO_4 = ZnSO_4 + H_2$$
$$65.5 + 98 = 161.5 + 2$$

it requires 65.5 pounds of zinc and 98 pounds of sulphuric acid to produce two pounds of hydrogen, or 377.2 cu. ft. (188.6 cu. ft. hydrogen weigh one pound); therefore to produce 1,000 cu. ft. of hydrogen, 173.6 pounds of zinc and 259 pounds of sulphuric acid must theoretically be employed. Since the zinc is only 98 per cent. pure and the acid 93 per cent., the actual amount of commercial material necessary for the theoretical production of 1,000 cu. ft. of hydrogen will be 177.1 pounds of zinc and 278 pounds of acid, and since it will not be possible, in practice, to obtain the theoretical yield, 10 per cent. could be added to cover such losses. The zinc costs about 5.25 cents per pound while the sulphuric acid will cost about one cent per pound, or 1,000 cu. ft. hydrogen when made by this method will cost, for

Zinc, 194.8 pounds at 5.25 cents	$10.23
Sulphuric acid, 305.8 pounds at one cent.	3.05
Total cost of materials	$13.28

To this must be added interest on the investment, depreciation, and labor charges.

The zinc sulphate formed as a by-product will constitute a credit against these charges. In the production of 1,000 cu. ft. of hydrogen about 823 pounds of crystalized sulphate will be produced.

b. *From Iron and Sulphuric Acid.*—In the production of hydrogen using iron instead of zinc, the cost will be much less, but the process does not produce as pure hydrogen, and for other reasons, the employment of zinc is to be recommended, when cheapness of production is not of first importance. The reaction with iron is as follows:

$$Fe + H_2SO_4 = FeSO_4 + H_2$$
$$56 + 98 = 152 + 2$$

To produce 1,000 cu. ft. of hydrogen the theoretical amount of acid will be the same as when using zinc, while the iron required will be 149 pounds.

In connection with the manufacture of hydrogen for inflating balloons, it is stated in Payen's Industrial Chemistry that in order to produce 500 cu. ft. of hydrogen, 150 kilograms of scrap iron as free as possible from oxide was employed and 2,500 kilograms of sulphuric acid diluted with 15,000 kilograms of water; 7,500 kilograms of iron sulphate was obtained as a by-product, or to produce 1,000 cu. ft. there was required:

Scrap Iron, 187.2 pounds or 25.6 per cent. above theoretical.
Sulphuric acid, 312.0 pounds or 12 per cent. above theoretical.
Water, 1,872 pounds.

With iron at 0.5 cent per pound and acid at 1 cent, this would cost:

187.2 pounds iron at 0.5 cent	$0.93
312.0 pounds acid at 1 cent	3.12
Total for materials	$4.05

The iron sulphate produced per 1,000 as a by-product will amount to 936 pounds.

c. From Water Gas.—A description of method of manufacturing hydrogen from blue water gas is given in the Journal for Gasbeleuchtung (January 18, 1908).

The author states that by passing water gas over calcium carbide in heated retorts, the calcium carbide not only removes the carbonic oxide, carbonic acid and oxygen, but also the nitrogen, resulting in the production of pure hydrogen. To reduce the use of carbide to a minimum, CO and CO_2 were removed previously from the water gas by the use of other absorbents. By washing the gas with cuprous chloride (Cu_2Cl_2) a gas containing 80 per cent. of hydrogen was obtained. By combining the method with lime washers for the removal of CO_2, there resulted a gas containing 89 per cent. of hydrogen from which the residue of CO, O_2, and nitrogen was removed by passing the gas through a retort over-heated cal-

cium carbide. The hydrogen obtained was from 99 to 99.6 per cent. pure.

The foregoing method of procedure, however, proved very troublesome and uneconomical. The author, therefore, turned his attention to devising a more satisfactory method. He found that the CO could be removed mechanically by liquefying the water gas in a Linde air liquefying apparatus. The power necessary for the liquefying of the CO is said to be so low that it is less than that obtained by burning the CO in a gas engine. The author has constructed an experimental plant at Hollreigelsgreuth near Munich with a special water gas producer for an hourly production of 10 cu. m. (= 353.15 cu. ft.), and which will soon be put in operation. The cost of production of hydrogen by this method is not given.

Has hydrogen in itself any illuminating value? Not in the sense in which the term is generally employed. It burns in a flat flame burner with a non-luminous flame but in a Welsbach mantle it will develop according to Dr. Schmidt about 12½ candle power per foot.

Can hydrogen be compressed without losing its calorific value? Yes.

Is hydrogen as explosive as acetylene? According to Dr. P. Eitner of Carlsruhe (see London Journal of Gas Lighting, March 18, 1902, Progressive Age, June 2, 16, July 1, 15, 1902, translated from Jour. fur Gasbeleuchtung, January 4, 1902, et. seq.), the highest and lowest percentage of hydrogen with which explosion was obtained were 9.5 and 66.3 hence the explosive limits with air were between 9.45 per cent. and 56.4 per cent. of hydrogen in the mixture.

Butterfield states that with mixtures of air and acetylene when the proportion of acetylene is more than 4 or 5 per cent. and less than 80 per cent., the mixture exploded when ignited. From the foregoing figures it appears that the explosive limits of acetylene are somewhat wider than for hydrogen. Acetylene, however, ignites at a temperature of 480 degrees Cent., which is much lower than the temperature of ignition of other combustible gases, and since it is an en-

dothermic compound it is liable to explosive decomposition. For this reason it is unsafe to store undiluted acetylene under pressure of more than a few inches of water except under exceptional circumstances.

According to Butterfield the storage of considerable quantities of undiluted acetylene at pressure of two atmospheres and upwards is attended with great risk as under such conditions it will explode if fired by any means though it contains no traces of air or oxygen. The foregoing does not refer to the storage of acetylene over acetone. It is stated that at a pressure not exceeding six or eight atmospheres, where there is no exposure to high temperatures, solutions of acetylene in acetone are much safer than acetylene gas at the same pressure or liquefied acetylene.

Question No. 17.

Answer By the Bureau of Information.

The Bureau wishes to make a few general remarks in regard to this question and for details calls attention to the answer at large given by Mr. H. Russell, Sup't, Rochester Railway and Light Company.

If the above question means that it is only occasionally that the temperature drops as low as 30° below zero, then it would be sufficient to provide a liberal system of piping to carry live steam to the holder tank, to the cups and to the bottom of the tank; this piping being provided with ejectors of the Koerting type, so that the steam would not only give up its heat to the water, but by pointing the ejection pipes all in one direction would also keep the water in circulation. The air should be excluded from the surface of the water by means of rubber flaps.

If the question means that the temperature drops to 30° below zero, and remains at this temperature for considerable periods of time, it might prove advisable to enclose the holder in a building constructed of a material having air spaces such as, for instance, hollow concrete blocks. The ejection pipes

at the bottom of the holder tank would be directed toward the crown support, as cases have been known of ice forming around the crown support.

Answers at Large.

By Mr. H. Russell, Rochester, New York.

"Such a holder should be heated with live steam at a pressure of not less than 50 lbs. Where the steam pressure is subject to fluctuations a regulating valve on the main line to holders is advisable. Main line should be not less than 2 inches and carefully insulated. The steam jets in the tank should be on the injector principle, so installed that they suck the water from near the surface and discharge at a point below the surface equal to about ⅔ of the height of the tank. The dis-

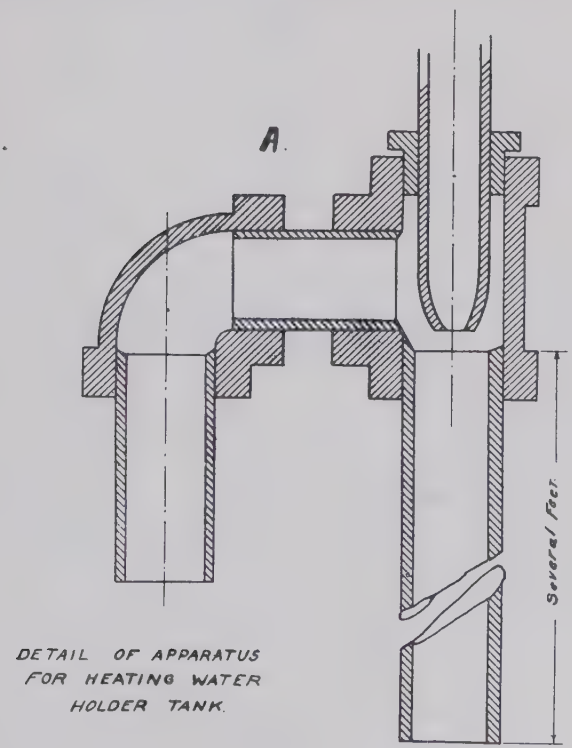

Fig. 1.

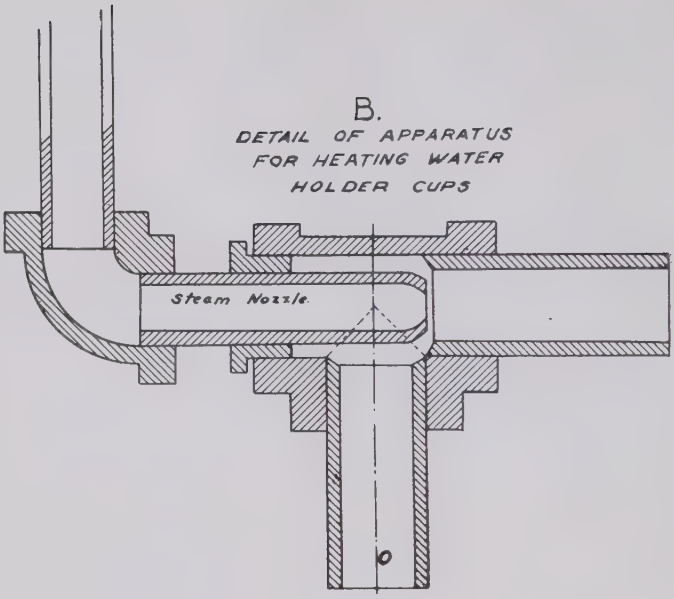
B.
DETAIL OF APPARATUS
FOR HEATING WATER
HOLDER CUPS
Steam Nozzle.

FIG. 2.

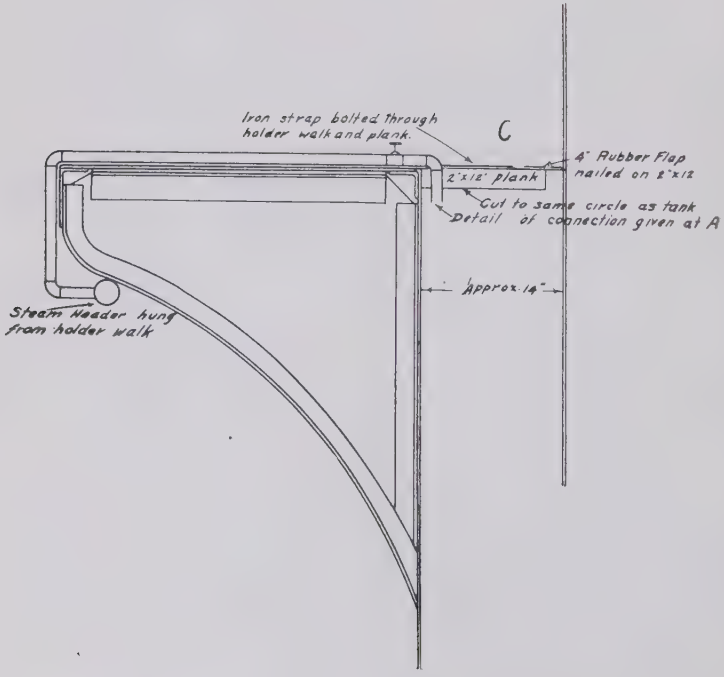
Iron strap bolted through holder walk and plank.
C
4" Rubber Flap nailed on 2"x12"
2"x12" plank
Cut to same circle as tank
Detail of connection given at A
Approx. 14"
Steam Header hung from holder walk

FIG. 3

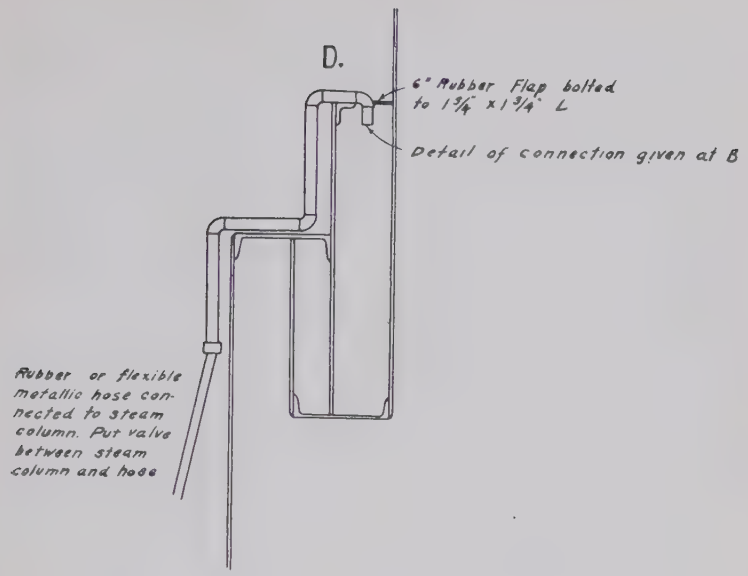
D.
6" Rubber Flap bolted to 1¾" x 1¾" L
Detail of connection given at B
Rubber or flexible metallic hose connected to steam column. Put valve between steam column and hose

Fig. 4.

charge ends should preferably be turned in one direction as a further aid to circulation. This arrangement marked "A" is shown on the drawing.

The cup or cups should be treated by steam jets made up on the same principle. This is shown at "B" in the drawing. The pipe marked "C" should be near enough to the surface so that in the event of back siphoning the cup would not be unsealed. Each jet to the cup or cups should be from a separate riser with shut off valves at bottom and each riser should be arranged with a small bleeder opening to the tank, so that all water will drain from the riser. Hose connections to the cup should preferably be flexible metallic and hose provided with flexible couplings at points of connection.

The water space between the tank and outer lift should be covered with a weather board and rubber strip as shown at "C" in the accompanying drawing.

The exposed water surface of the cups sould be covered with canvas or rubber flaps as shown at "D" in the drawing.

These coverings are very efficient and will cut the steam consumption very markedly."

By Mr. W. R. Putnam, Red Wing, Minn.

"While we are using a 150,000 cubic foot holder instead of a 400,000 cubic foot holder, the same plan of piping should apply to the larger as to the one we are using. We carry a ¾-inch pipe part way round the walk on top of the tank and turn steam directly into the water at from one or all three openings, according to the weather conditions. These openings are arranged so as to keep the circulation of water around the tank. We only use one such opening in our cup, the connection being made with flexible metallic tubing. We find this one opening ample to keep up a circulation of water around the whole cup. The amount of steam that is used, of course, varies with the weather. We do not have as much trouble on 30° below zero weather as we do when the thermometer is in the neighborhood of zero and accompanied with a severe northwest wind.

Question No. 18.

Answer By the Bureau of Information.

The flame temperature attained by any combustible gas is affected not only by the amount of heat generated by the unit quantity of the kind of gas, but by the amount of oxygen allowed to complete combustion and by the method of burning and as to what amount of diluent gases, nitrogen, which it is necessary to heat up in the process of combustion.

The theoretical flame temperature of a gas is independent of the character of burner and is the highest temperature that can be obtained when no heat is lost in any way and all of the heat developed is used to heat the products of combustion; and the amount of air supplied to the gas must be exactly that required for complete combustion and no more. This theoretical flame temperature is never attained in practice because of the cooling effect of the surrounding air and the difficulty of so regulating the air supply as to give perfect combustion without an excess of air.

To obtain perfect combustion with an ordinary open flame burner, it is necessary that the gas should be spread out in a thin sheet, the combustion taking place on the surface and consequently over a considerable area. In the bunsen burner, on the other hand, the larger part of the air needed for combustion is mixed with the gas itself, so that the resulting flame is smaller and the heat generated in a smaller space. Consequently the bunsen flame loses less by radiation and the heat generated can be concentrated on a smaller spot giving the apparent effect of a higher temperature although the total heat is the same and the hottest point in the bunsen flame not hotter than the hottest point in the open flame.

Such authorities as Remsen (page 400, Inorganic Chemistry); Poole (page 168, Calorific Value of Fuels); Lewes, Waggoner, Warburg (page 354-7 O'Connor's hand book) all seem to agree that the maximum temperature in burning any kind of gas is found near the top of the luminous zone in the luminous flame. The average temperature of the bunsen flame is naturally higher than the temperature of a luminous flame of the same gas because the combustion is more intensive being completed in a smaller volume and offering a smaller surface for dissipation of the heat which raises the temperature of the products of combustion. A blow-pipe with air is only a case of greater concentration.

The difficulty of obtaining the actual temperature is very great, and is sufficient excuse for the varying results found by different experimenters. Fery, in the Comptes Rendus, 1903, tested a bunsen burner, with these results:

Temperature, air on.....1871 deg. C.
Temperature, air half on.....1812 deg. C.
Temperature, air off.....1712 deg. C.

In each flame these were the highest temperatures found. The temperature thus given with the air off, cannot be taken as the temperature which would be obtained with a properly designed luminous burner and consequently the foregoing figures do not contradict the statement made before, that the maximum temperature is found near the top of the luminous zone in the luminous flame.

As to the second half of the question, the total amount of heat developed by the complete combustion of gas of the same character will be exactly the same whether burned in the luminous type of burner or in the bunsen burner, if complete combustion is effected in both cases. In the case of the luminous burner this is more certain to be the case and assuming a properly designed burner for both types of heaters, there would be no difference in efficiency.

The question inquires concerning the relative efficiencies of bunsen and luminous flame radiators. Accepting this question literally, and that inquiry is made as to the efficiency of the two forms in giving out radiant heat, the following may be of some little interest.

As before stated, with equally perfect combustion of gas by the two flames, the heat developed by the consumption of a given amount of a given gas in the two burners will be exactly the same; the bunsen flame is a little more liable to incomplete combustion and consequent waste of unburned gas, but the burners ordinarily provided in appliances are so good that with proper operation and keeping the flame from too intimate contact with cold surfaces, it will be just as efficient as the luminous flame. This equal amount of heat developed by the two burners passes away from the flame in two ways—part of it is radiated, and the remainder passes off as sensible heat of the products of combustion or sensible heat of air which is warmed by contact with the stove. It is often desirable to secure as great an amount of radiant heat as possible, since this is thrown off in all directions in the lower part of the room, whereas hot products of combustion or air heated by contact with the stove tend to rise and remain near the ceiling of a room. Now the luminous flame is a much better radiator than the bunsen, and consequently if radiant heat were sent out only by the flames the luminous flame would be the more efficient. To make the bunsen flame heater thus efficient with respect to radiation, however, its products of combustion are made to pass over asbestos or other solid surfaces, which are thereby heated and give out

radiant heat; if a bunsen flame heater thus equipped discharges its products of combustion at the same temperature from the heater as does a luminous flame heater, and if the air heated by external contact with the heater is the same in quantity and temperature, then the bunsen flame heater must consequently send out just as much radiant heat as does the luminous flame heater.

Answer at Large.

By "A," Philadelphia, Pa.

The first of these questions must be answered in the affirmative, both from the point of view of the average temperature and the maximum obtainable in any part of the flame though temperature conditions of luminous flames may vary considerably according to the kind of burner.

A comparative idea concerning the average flame temperature in a luminous and a bunsen (non-luminous) flame may be gathered by observing the change which the flame of a bunsen burner undergoes, as it passes from a state of luminosity, when the air is not admitted with the gas to a state of full non-luminosity, as it is more and more "aerated." In its original non-aerated condition is consisted of a large inner core of virtually unburnt gas surrounded by a comparatively thin mantle representing in different layers different stages of progressive combustion due to reaction with air from the outside.

As air is gradually admixed with the gas, the inner core of virtually unburnt gas shortens relative to the flame, while the zone of combustion above considerably increases its proportion and the mantle representing gas in a state of combustion thickens. The total volume of the flame decreases.

In the luminous flame the heat developed is all due to combustion at or near the surface, where loss of heat to the atmosphere (through radiation aided by convection) is relatively great, while in the bunsen (non-luminous) flame a more or less great part is due to combustion in the inside under conditions representing relatively less loss through such dissipation. On this account and indirectly because of the smaller volume and surface of the flame, the heat developed is more

efficiently utilized for heating the flame itself, i. e., of the constituent gases and thus for increase of its temperature generally. Minor influence may be exerted by other causes in the same direction, such as the slightly smaller average specific heat of the bunsen flame and the greater radiative power of luminous flame.

What is true of a luminous flame producible by a bunsen burner, is in the essential true of any luminous flame, though temperature conditions may be made more favorable by means which lessen the dissipation of the heat or contribute to rapidity of combustion. Thus an argand flame, where the cooling action of the outside air is materially reduced and rapid combustion promoted, represents comparatively high temperatures.

High flame temperature is brought about through the promotion of perfect combustion of combustible gas with the minimum of air, under conditions where the maximum of heat is preserved and the air and gas are previously heated by extraneous heat source.

In a bunsen flame the above conditions for a high temperature may be obtained in a high degree by a suitable regulation of the admixture of air to the gas, so far as concerns the central part of the flame, where the mixture of the gas and air, if rightly proportioned, is rapidly burned after having been preheated to the temperature of the inflammation by passing through the hot mantle of burning gas in rising from the burner. As, therefore, in the said central part of the flame combustion takes place rapidly, i. e., with development of much heat in a short time and under conditions, where minimum heat is lost to the outside owing to the flame at the center being surrounded by a succession of hot mantles of gas in a state of combustion it is evident, that the balance of heat available to maintain the gaseous products in an equilibrium of high temperature will be relatively great, as an instance of which it has been found, that with ordinary illuminating gas the heat is great enough to fuse the point of a fine platinum wire.

In a luminous flame on the other hand, as the combustion in practically every part is dependent upon the outside air,

the combustion is less rapid and there is not the degree of local intensifying of heat in any one place, that characterizes the central part of the bunsen flame and, therefore, not the possibility of obtaining as high maximum temperature. The highest temperature is found where the combustion is most favored by increased aeration and preheating of the combustible, viz., near the top of the flame. The preheating feature applies in this case chiefly to the gas alone.

The second question must be answered in the negative, if it concerns the ordinary flueless s. c. gas radiator, where the products of combustion are permitted to issue into the room to be heated, as in this case, if the combustion is complete, as it should be, the total heat is made available in either case, which total heat is, of course, the same, independent of the kind of burner. It is a case of B. t. u's, not luminosity of flame temperature. The fact that a luminous flame radiates a small amount of heat in virtue of its luminosity involves no addition to the total heat developed; it may, however, exercise a slight influence on distribution of the heat and the fact that luminous flame is more satisfactory to the eye and hence to the sense generally, has no doubt some value.

With gas radiator connected to a flue, the superior radiating power of the flame itself may represent an appreciable percentage of the heat made useful, if the general efficiency of the apparatus is small. As so much depends upon the construction and arrangement of the radiator, it is hardly possible to draw general conclusions.

Question No. 19.

Answer By the Bureau of Information.

The question as stated is decidedly a theoretical one, and the questioner evidentally intended an answer which would incorporate only the very general principles governing the best and most up-to-date installation of gas distribution as it should be applied in large cities.

The question states that the corporation has ample resources.

The only effect this would have on the installation would be that funds would be available at the start to install such construction as would insure economies in operation, which could not be obtained by a company which, for the lack of funds, would have to allow the cost of first investment to have greater importance and weight in the designing of the system than the subsequent economical operation of same.

Having ample funds, the company, of course, would install such materials as would have the longest life, and since the underground conditions are those for the average American city, it follows that cast iron should be selected for the pipe line, as opposed to either wrought iron or steel. Cast iron would last for an indefinite length of time. The life of wrought iron or steel pipe on the other hand, would be comparatively short. The system then would be one in which cast iron mains would be used, and since the service is to be as nearly perfect as possible, it follows that one of three methods or combinations of same must be used.

(1) The size of the mains must be exceptionally large, so that the drop in pressure will be very small, or,

(2) An individual governor must be installed in the house of each consumer, with high pressure in the mains, or,

(3) District governors can be installed which will control the pressure in the districts in which they are located, the gas being brought to these governors under medium or high pressure through ordinary size mains.

The first proposition is not economical on account of the excessive cost of the large mains, except for a limited space around the plant, as for instance, in a compactly built, and comparatively small business district near the works, wherein would be located office buildings, stores, hotels, restaurants, and industrial consumers, all using large quantities of gas.

The second proposition is not advisable for the following reasons:

(a) There will be added expense of operation, due to the necessity of periodically inspecting the governors.

(b) There is an added danger due to the fact that high

pressure gas is conducted through the services into the houses so that a leak in one of these services would be of greater importance than a leak from a service carrying low pressure.

(c) In a city of 150,000 inhabitants there would be probably 30,000 governors, and it would be impossible to be sure at all times that these 30,000 governors would be giving satisfactory service. One can never be absolutely sure as to what a governor is doing, except by constant observation.

The third proposition seems on the whole to be the most advisable from the fact that practically all of the advantages of the low pressure distribution are obtained, as far as it concerns the bulk of the mains, and all of the services. The pressure is governed at only one point in each district, and it is, therefore, easy to predict the corresponding pressure at each consumer's meter.

The system is absolutely safe, and there will be no expense due to complaints or poor pressure, or from the necessity of inspection, as is the case where governors are used.

Since cast iron mains are to be used, the pressure will vary from 2 to 8 pounds per square inch. This will allow us to utilize the simple blower engines. The higher pressures will only be used as the city expands to the point where additional high-pressure mains will otherwise be necessary.

Owing to the relatively low pressure at which the gas is pumped, the loss in candle power will be negligible. The pumping stations being at the works, the cost of pumping will be a minimum.

As the city grows, it would probably be advisable to install a holder at some carefully selected point in the city, and on the belt line, which would supply the various manholes. A duplicate set of machinery would have to be installed at the works, and when the holder is installed a pumping unit could be installed there also.

Individual cases, however, might readily arise, where a combination of all these systems would be the most desirable. For instance, low-pressure distribution might be very advantageous in a given district adjacent to the works, and in the

largest portion of the city the system No. 3 in this answer might be most economical and satisfactory. However, individual governors might be advantageous in certain isolated districts, either temporarily or permanently as may develop, and also could be installed along the lines of the high-pressure mains, thus avoiding a low-pressure main paralleling same.

In general, the higher the distribution pressure, the greater, of course, is the economy in the cost of mains. As this distribution pressure increases, however, the greater becomes the liability to extinction of burners in case of temporary breakdown of the pumping machinery, and consequently duplicate, or other equivalent machinery become very necessary.

It would be added as an additional argument in favor of low-pressure distribution, re-enforced by medium pressure boosting, that in a city of the size assumed in the question up to several times that size, it is not necessary to pump all the gas, or nearly all the gas. The ordinary holder pressure on the booster mains during, say 16 hours out of the 24, will usually furnish enough gas to the governors to take care of the consumption of the peak load periods, whereas, with only high-pressure distribution every foot of gas delivered must be pumped.

The difference in the amount of standard machinery, wear and tear and repairs to same, with labor and power, is a not inconsiderable item. While the largest part of the expense of pumping is usually the fixed charge, the labor item and friction load power are sufficiently great, so as to make the reduction in the number of hours that the plant is operated a very considerable item of saving.

Various other points bearing on this question will be treated in a paper on "High-Pressure Distribution," which will be presented at the meeting of the American Gas Institute in October, 1908.

Question No. 20.

Answer By the Bureau of Information.

Because of the fact that the most exhaustive tests of water gas waste heat boilers with which the Bureau of Information

is familiar have been made by The United Gas Improvement Company in the Philadelphia Gas Works, the Bureau has taken the liberty of getting from that company a reply to the question, the reply being formulated by Mr. J. M. Rusby. His answer is given as the answer at large to this question.

In comment upon this answer the Bureau wishes to point out that the above calculations pre-suppose conditions getting the least evaporating effect in a waste heat boiler because a condition of operation is assumed which requires a smaller volume of blast products per thousand cubic feet of illuminating gas made than is generally found in practice.

It is also assumed in the above calculations that the combustion of carbon monoxide from the generator will be complete in the carburetter and superheater with the amount of air barely necessary. This, of course, is rarely done in practice, the tendency being to produce more carbon monoxide than is required in the brick work.

It is also pointed out that by the addition of a third air supply at the inlet of the waste heat boiler, any over-production of carbon monoxide in the generator blast gases can be consumed in the boiler, which thereby earns its title of being a waste heat boiler in another direction.

It is stated further that in regular practice with the waste heat boiler there is obtained a somewhat higher evaporative effect than is shown by Mr. Rusby's data.

Answer at Large.

By Mr. J. M. Rusby, Philadelphia, Pa.

I give the following in reply to Question No. 20 of the Bureau of Information (question above quoted). This reply does not exactly meet the question as it does not assume exactly 75 per cent. efficiency of the boiler, but assumes inlet and outlet temperatures of gases which are, closely what we get in good practice. My reply gives everything essential, however, and any desired deductions can be made from it.

Assuming the illuminating gas to be discharged from the boiler at 500 degrees F. and the blast gates at 600 degrees F., both entering the boiler at 1,400 degrees F., the heat given

up by the gases to the boiler per M. of illuminating gas made will be about as follows:

Heat from Illuminating Gas:

The weight of 1 M of 24 C. P. illuminating gas as discharged from the superheater will be, closely, 740 cu. ft. blue gas, weight 32.2 lbs., and 4 gals. oil, weight 28.4 lbs. total 59.6 lbs.

	B. t. u.
59.5 lbs. × .49 sp. ht. × (1,400° — 500°) =	26,300
Heat from excess steam (14 lbs. assumed)	6,930
14 lbs. excess steam × .55 sp. ht. × (1,400° —500°) =	33,230

Heat from blast products:

For 24 candle gas assume, with average good operation, the minimum volume of superheater stack blast products per M of illuminating gas made as 2,100 cu. ft. weight per cu. ft. .083 lbs., or total weight 2,100 × .083 = 174 lbs. 38,250

174 lbs. × .275 sp. ht. × (1,400° — 600°) = 71,480

The total heat of 1 lb. steam of 150 lbs. gauge pressure above 60° F. 1165 B. t. u. Hence the possible evaporation is 71,480 ÷ 1,165 = lbs. 61.4

The temperature of steam and water of 150 lbs. gauge pressure being 365° F., this is the limit of reduction temperature by the boiler, or the possible fall of temperature of gases is 1053°.

Our above figures assume a fall of temperature of the illuminating gas of 900 degrees, or a boiler efficiency of 900 ÷ 1,035 = 87 per cent.; similarly, the efficiency for the blast gas will be 800÷ 1,035 = 77 per cent.

We have obtained about these efficiencies in practice; they, of course, depend upon the amount of heating surface of the boiler.

Working with boiler pressure of 80 to 90 lbs. gauge, and temperatures of blast and illuminating gases approximately as assumed above, but necessarily varying somewhat, our tests show us to obtain practical results per M. illuminating gas made of 38 lbs. of water evaporated by the blast gas and 32 lbs. evaporated by the illuminating gas, this evaporation being

from and at 212 degrees. This evaporation of 70 lbs. water from and at 212 degrees means the absorption by boiler of 70 x 964 (latent heat of 1 lb. steam at 212 degrees) = 67,480 B. t. u. This would evaporate from 60 degrees F., temperature of feed water, and at 150 lbs. gauge (365 degrees F.) 67,480 ÷ 1,165 = 58 lbs. steam, which is fairly close to our foregoing estimated 61.4 lbs.

The foregoing estimate ignores the small amount of latent heat obtained by the condensation of a little tar in the boiler.

Specific heats at these high temperatures are, of course, a little uncertain, but we believe the foregoing to be about right.

The calculation of boiler efficiency assumes that the specific heat of gases is the same as at higher temperatures, which is not true, but the error caused by this assumption is small.

Question No. 21.

Answer By the Bureau of Information.

Any gas containing illuminating vapors will experience a continuous condensation and precipitation of these vapors, with consequent drop in candle power and heating power, as the temperature of the gas is gradually lowered after leaving the generating apparatus. This loss of vapors, candle power, and heating power, is dependent almost entirely upon the temperature to which the gas is cooled. The extent to which gas will lose candle power and heating power after leaving the holder and in passing through street mains is, therefore, almost entirely dependent upon the difference between the temperature of the gas in the holder and its temperature in the street mains. Consequently, if a test of the heating power of the gas has been made at the works, say at the holder outlet, then to predict what, if any, will be the fall in the heating power in passing through the mains, it is necessary first to know to what temperature the gas has been cooled in the holder; in some extreme cases the holder temperature may be even lower than that of the street mains, and in such a case, the gas should show just as high a heating power when delivered to the consumer as it shows by test at holder outlet. The most satisfactory reply to the question, taking the general case

of gas freshly delivered from the generating apparatus, and experiencing thereafter a continuous fall in temperature, is, therefore, to state what loss in heating power is experienced when the gas is cooled from an ordinary high works or holder temperature to the lowest temperature of street mains ordinarily experienced in Northern climates. Each observer who may make the test of the heating power of his gas at the works will have to ascertain to how low a temperature his gas has been cooled at the works or holder before its heating power was thus determined, and having ascertained this temperature he can, from the figures given hereafter, ascertain at least approximately how much further loss there will be in transmission of gas through the mains at whatever temperature exists in them at the time. For complete information as to the condensation of vapors from gas, and methods of ascertaining, by the use of the hygrometer the temperature to which a gas has been cooled, see a paper by W. H. Gartley, Proceedings of the American Gas Institute, 1906. (Progressive Age, December 15, 1906, p. 754.) The question inquires as to the loss in B. t. u. per cu. ft. "per mile from works holder;" from the foregoing, however, the gas will arrive at a permanent heating power just as soon as, or very quickly after, it has reached the temperature of the street mains, and this will probably occur within a very much less distance than one mile from the works if the gas travels at any ordinary low speed.

The actual number of B. t. u. lost in cooling a gas through a given number of degrees, will necessarily vary according to the kind and quantity of vapor illuminants in the gas; to give figures covering a large range of kinds and candle powers of gases, therefore, would demand a large number of experiments, covering which, up to the present time there does not appear to be any data extant. The following experiments which were made with care, will, however, give a good indication of losses for the qualities of gas ordinarily distributed. Note that the two experiments on carburetted water gas indicate the loss in B. t. u. per 1 degree to be somewhat greater at high temperature than at low, which was expected. Candle powers are by flat flame tests:

	Temp. Deg. Fahr.	Heating Power B.t.u. per Cu.Ft.	Candle Power	Loss B. t. u. per 1° F. Cooling
Carburetted water gas:				
Initial	78	653	24.4	....
Final	43	614	....	1.11
Initial	59	674	24.8	....
Final	37	653	....	0.96
Coal Gas:				
Initial	65	573	12.3	....
Final	37	557	....	0.60

From the foregoing, it seems reasonable to expect that in cooling from ordinary works temperatures to winter street main temperatures there will be a loss per 1 degree Fahr. of about 1 B. t. u. from carburetted water gas of about 24 candle power, and of about 0.6 of a B. t. u. from 12 to 13 candle power coal gas. It also seems a reasonable rough estimate that gases of initial candle power intermediate between the foregoing 12 to 13 and 24, would be intermediate and proportional between the 0.6 B. t. u. and the 1 B. t. u. per 1 degree Fahr., thus, a mixed gas of 18 candle power would probably experience a loss of somewhere about 0. 8 B. t. u. per 1 degree Fahr.

Question No. 22.

Answer By the Bureau of Information.

The question is taken as referring to the principles laid down in the paper on this subject, read before the 1906 meeting of the American Gas Institute, by Mr. W. H. Gartley, and now adopted in Philadelphia. In brief, they are as follows:

1. It is recognized that illuminating gases depend for their light giving quality to some extent on their hydrocarbon vapor constituents and are, therefore, influenced in their candle power intensity by exposure to cooler temperatures; that is to say, when a gas is cooled below the lowest temperature to which it has previously been subjected, there will be a certain falling off in candle power, depending upon the quantity of illuminating vapors carried by the gas and the tension of those vapors.

2. The extent to which the candle power is influenced by

cooling any given quality of gas may be determined by passing the gas, as manufactured: First, upwards through a coil immersed in water by which the gas, never having been reduced to that temperature, is cooled to 70 degrees F., and then passed through another cooling coil in which it is cooled to lower temperatures, say 60 degrees F., 50 degrees F., 40 degrees F. and 35 degrees F., and by means of a bar photometer the loss in candle power, due to cooling below 70 degrees F., is noted; that is to say, after the gas has passed through the 70 degrees F., coil its candle power is observed. It is then cooled through another coil to 60 degrees F., and its candle power is observed. Another sample is taken (same general gas, made from same materials, in same way) and its candle power measured after passing through the up-coil at 70 degrees F., again measured after passing through the second coil where it is cooled to 50 degrees F., and so on down to the lowest temperature with which the gas will meet in the mains in the winter time. By this means a curve is made that will show the loss of candle power of the gas from inlet of commercial holders, due to subsequent cooling in the mains.

3. It is pointed out that the gas may be cooled in the mains to a temperature not indicated by a thermometer placed in the mains at any one point in the town; that when a gas is cooled to lower temperature in the mains, as for instance, by passing under a bridge, or by the main approaching the surface of the ground, it will not be saturated with illuminating vapors at any subsequent high temperature. It is necessary, therefore, to know, not the temperature of the gas at some one point in the center of the city, but to know the temperature at which the gas is saturated with illuminating vapors at that point, and this is done with the hygrometer (now much simplified), a sketch of which accompanied the above mentioned paper, read before the American Gas Institute in 1906.

The candle power of the gas at its inlet to the commercial holder is determined by passing the sample of this gas to the photometer through a coil which is kept at a uniform temperature throughout the year, and which must be below any tem-

perature that the gas has previously met in its passage through the works, and which is maintained in Philadelphia at 70 degrees F. By this means the candle power of the gas in the commercial holder, if cooled to 70 degrees F., will always be known. Knowing the temperatures from the hygrometer, at which the gas is saturated with illuminating vapors in the mains, and knowing from the chart the loss that will be brought about in this gas by cooling of any given number of degrees, it is clearly possible to forecast what the candle power of the gas must be in entering the commercial holder to deliver a uniform candle power in the center of the city. Again, it is stated that there is no wide departure from this candle power throughout the city, unless the gas should meet with some material cooling in its passage to some portion of the outlying districts. It is not necessary to read the candle power of the gas at the outlet of the commercial holder, which experience proves is influenced by the atmospheric temperature.

A coal gas is less influenced by reduction in temperature than water gas, because it contains less vapors and is of a lower candle power. It also has probably been cooled to a lower temperature in its progress through the works to get out the ammonia; but where a comparatively dry coal gas is allowed to mingle at the higher temperature with the water gas, when they come together the coal gas will become saturated with the vapors dropping out of the water gas to such an extent that a curve made for water gas will probably suffice for mixed coal and water gas up to probably 40 per cent. coal gas and 60 per cent. water gas.

In Omaha the gas company endeavors to preserve a constant candle power throughout the distribution system, and has succeeded in delivering a uniform candle power to the consumer within a variation of approximately 1 candle power under all conditions of weather and temperature. The gas manufactured and distributed in Omaha is carburetted water gas.

The methods followed in Omaha for obtaining a uniform candle power at a distance from the works resemble very

closely those adopted in Philadelphia. The method of operating followed by Mr. W. H. Gartley, and at Omaha, has for its object the maintenance of a standard, uniform, candle power of gas in the street mains, as determined by the candle power observed at an outlying test station, and involves the use of a working photometer at the works which measures the candle power of the gas at the inlet of the storage holder instead of on the outlet, the gas first passing through a coil of constant temperature and this temperature being below any temperature to which the gas may have been previously subjected. By the means of a "dew point hygrometer" used at the test station, the minimum temperature, to which the gas has been subjected, previous to reaching the test station, can be determined. By means of a curve, constructed from actual observation, comparing the candle power of the gas at the working photometer at its constant temperature, with the candle power of the gas at the test station at its observed dew point temperature, it can readily be determined what candle power is necessary to be carried at the inlet of the storage holder in order to deliver, at the test station, the standard candle power.

In Omaha the gas tested at storage holder inlet is first passed through a 35 degrees F. up-coil, the top of riser being provided with a cotton scrubber that is changed every 12 hours. In Philadelphia a 70 degrees F. coil is used. In both Omaha and Philadelphia the gas tested at test stations is not passed through any coil, but is taken at room temperature, which will average about 70 degrees F., and, of course, all tests are corrected to standard pressure and temperature. Omaha's experience bears out the statement made by Mr. Gartley in his paper that: "With this method in use, no importance need be attached to loss of candle power from friction in the mains and other vague causes." While there are some slight differences in the methods followed in Omaha and Philadelphia which give slightly different results, at the same time Omaha's experience has confirmed Mr. Gartley's fundamental principles, which may be thus summed up as follows:

In order to deliever a uniform candle power water gas to the consumer, the following conditions are necessary:

Uniform generator house practice.

Gradual and sufficient condensing.

Careful regulation of temperature conditions in purifiers.

Careful candle power observations at inlet of storage holder, the gas passing through a coil of constant temperature, which would be below the temperature to which the gas has been previously subjected.

Maintenance of temperature of gas in storage holders, above street main temperature by the use of steam or hot water, if such is required.

Removal of oil condensed on the surface of the water in storage holders as fast as deposited.

Observation of hydrocarbon dew point at a given distance from the gas works.

Observations of candle power at a given point where dew point is observed.

Determination of candle power required at inlet to storage holder in order to deliver desired candle power at street temperature, as indicated by hygrometer.

Finally, after the accumulation of sufficient data, in order that the desired candle power can be delivered, a chart should be made which will show the necessary candle power that must be carried at outlet of constant temperature coil of storage holder when the dew point at the delivery point is known; and this chart will differ more or less for each city according to local conditions.

Question No. 23.

Answer By the Bureau of Information.

As an answer to this question involves the securing, for the purpose of test, both water gas and coal gas of a wide range of candle power, the difficulty of getting such gases at any one works to supply the data will be very evident. The accompanying curves give the data from observations of gases at two different works, designated as Works "A" and Works "B," covering a range less in extent than the question mentions. The lower candle powers at Works "A" were secured

by the elimination of the illuminating vapors through cooling of high candle power gas.

To the extent of the difference involved between an ordinary 18-candle power water gas, for instance, and an 18-candle power water gas produced by the cooling down of, say a 23-candle power water gas, the data is debatable; but as the consumer in a large majority of the works, for a large portion of the year, gets a gas that is the result of the cooling down of a high candle power gas, the practical value of the data thus given is enhanced instead of reduced.

Above 19.2 candle power of the 8-foot E. H. lava tip the Carpenter burner is seen to decrease in efficiency very rapidly, and crosses the line of the E. H. lava tip at 21.6, if the gas is burned at 5 feet per hour, or approximately thereto. This is due to smokiness and the flame burning above the chimney. In a number of works the agreement with the state or municipality specifies that, for test, the gas shall be burned at the rate of 5 feet per hour and, therefore, in such cases the Carpenter burner is not more efficient than the 8-foot tip above,

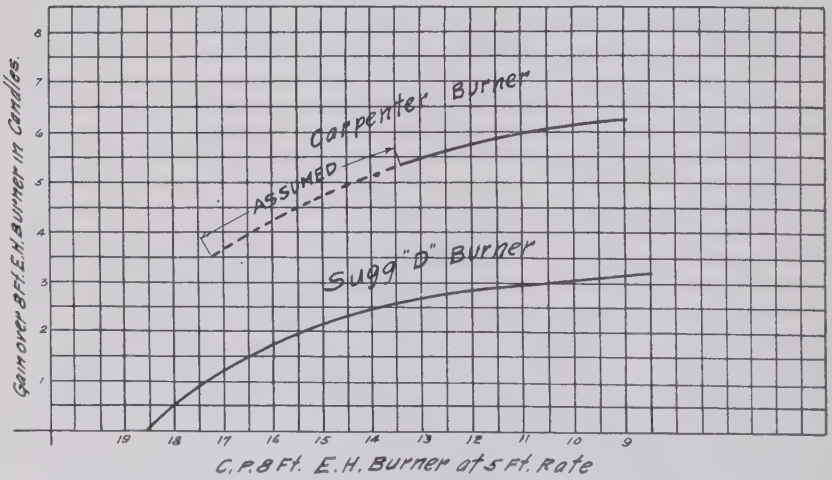

CURVE SHOWING RELATIVE EFFICIENCY OF SUGG "D" AND CARPENTER BURNERS COMPARED TO 8 FT. E. H. BURNER AT 5 FT. RATE USING COAL GAS.

WORKS A. MAY 29, 1908.

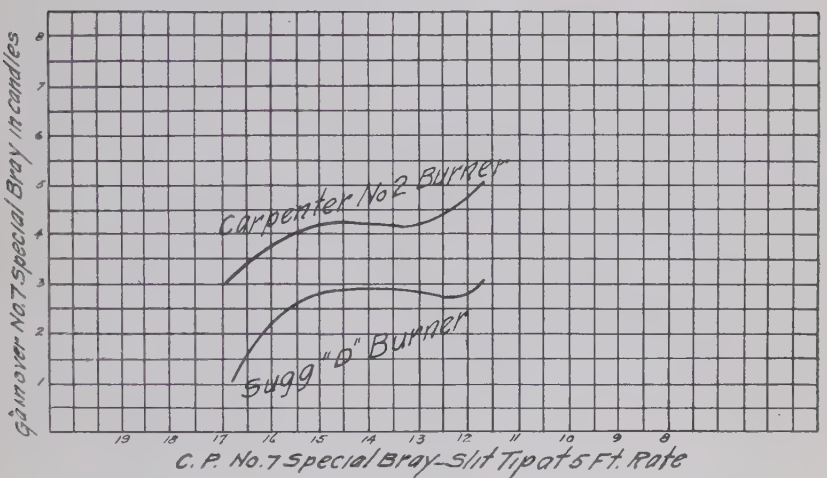

CURVE SHOWING RELATIVE EFFICIENCY OF SUGG "D" AND CARPENTER No. 2 BURNERS COMPARED TO No. 7 SPECIAL BRAY SLIT TIP AT 5 FT. RATE USING COAL GAS.

WORKS B. JULY 20, 1908.

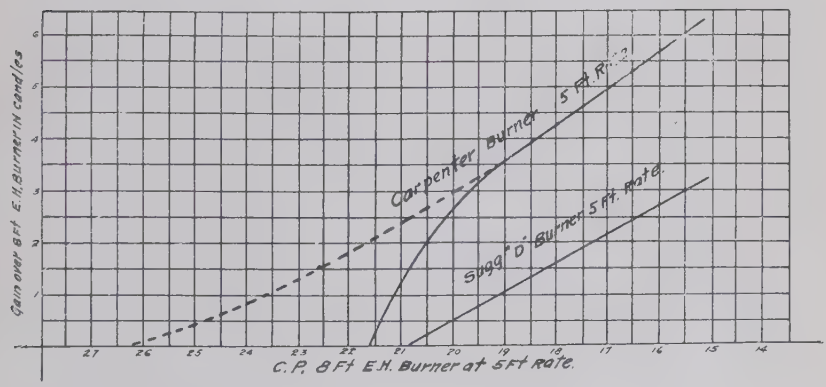
Gain over 8 Ft. E.H. Burner in candles
Carpenter Burner 5 Ft. Rate
Sugg "D" Burner 5 Ft. Rate
C. P. 8 Ft E.H. Burner at 5 Ft Rate.
Increased Efficiency by Gradually Reducing Rate of Consumption To Maintain Most Efficient Flame Height.

CURVE SHOWING RELATIVE EFFICENCY OF SUGG "D" AND CARPENTER BURNERS COMPARED TO 8 FT. E. H. BURNER USING WATER GAS.

WORKS A. JULY 29, 1908.

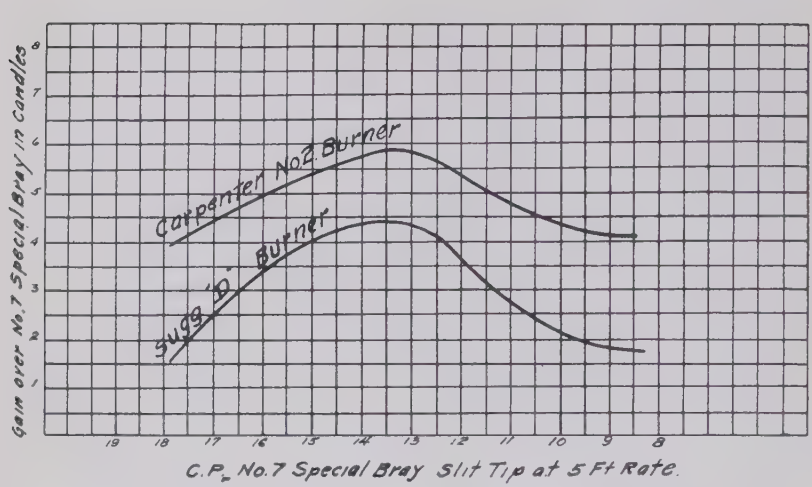

CURVE SHOWING RELATIVE EFFICIENCY OF SUGG "D" AND CARPENTER No. 2 BURNERS COMPARED TO No. 7 SPECIAL BRAY SLIT TIP AT 5 FT. RATE USING WATER GAS.

WORKS B. JULY 20, 1908.

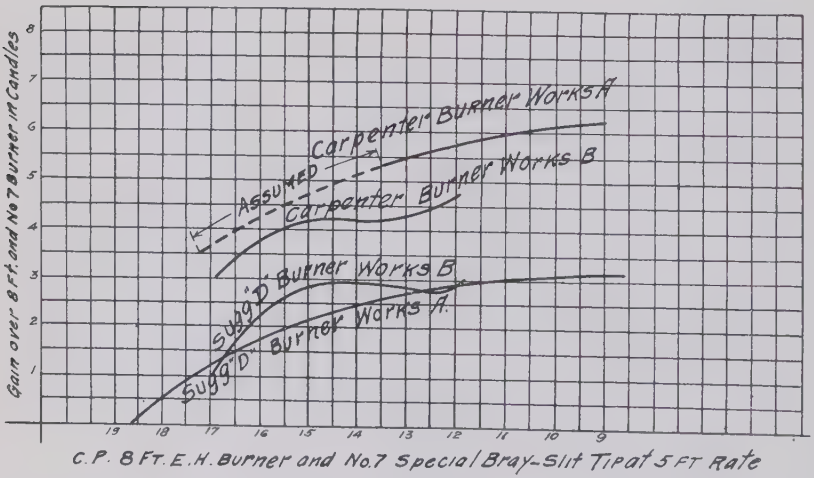
Gain over 8 Ft. and No 7 Burner in Candles
Carpenter Burner Works A
Assumed
Carpenter Burner Works B
Sugg'D' Burner Works B
Sugg'D' Burner Works A.
C.P. 8 Ft. E.H. Burner and No. 7 Special Bray-Slit Tip at 5 Ft Rate

CURVES SHOWING RELATIVE EFFICIENCY OF SUGG "D" AND CARPENTER BURNERS COMPARED TO 8 FT. E. H. BURNER AND No. 7 SPECIAL BRAY SLIT TIP AT 5 FT. RATE USING COAL GAS.

WORKS A. & B.

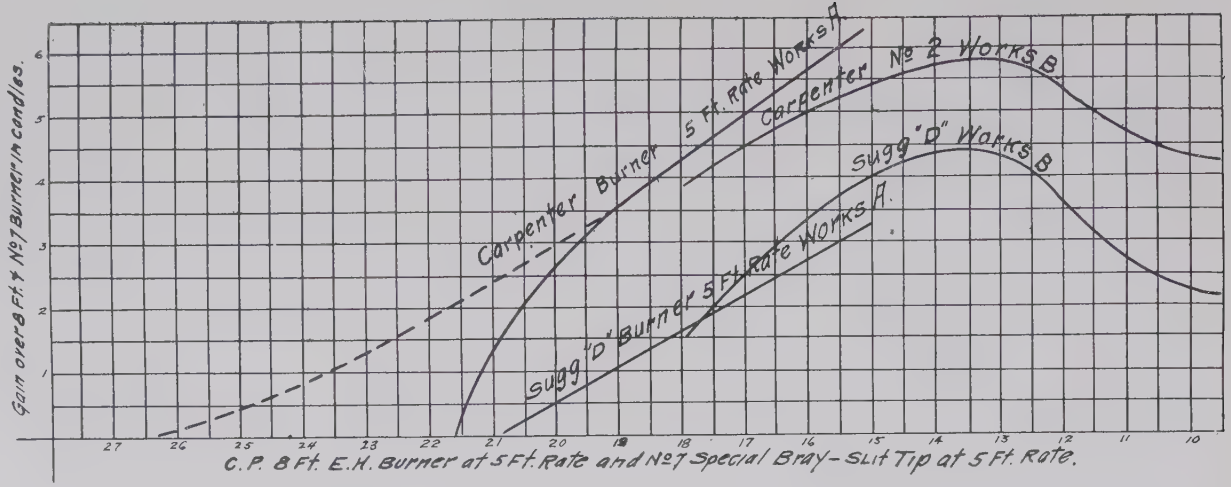
Gain over 8 Ft. E. H. No. 7 Burner in candles.
Carpenter Burner 5 Ft. Rate Works A.
Carpenter No. 2 Works B.
Sugg "D" Works B.
Sugg "D" Burner 5 Ft. Rate Works A.
C. P. 8 Ft. E. H. Burner at 5 Ft. Rate and No. 7 Special Bray - Slit Tip at 5 Ft. Rate.
- - - - - Increased Efficiency by Gradually Reducing Rate of Consumption To Maintain Most Efficient Flame Height

CURVES SHOWING RELATIVE EFFICIENCY OF SUGG "D" AND CARPENTER BURNERS COMPARED TO 8 FT. E. H. BURNER AND No. 7 SPECIAL BRAY SLIT TIP AT 5 FT. RATE USING WATER GAS.
WORKS A & B.

say, 21 to 22-candle power. If the flame in the Carpenter burner is kept at most efficient height by reducing the consumption as the candle power increases, it gives more efficient results than the 8-foot E. H. lava tip up to 26.5-candle power.

The Bureau is able to give herewith curves obtained at two different Works, Works "A" and Works "B." At Works "A" the efficiencies of the Carpenter and Sugg "D" burners referred to the 8-foot E. H. lava burner, for both coal and water gas, have been compared. At Works "B" the efficiencies of the Carpenter No. 2 and Sugg "D" burners referred to the No. 7 special Bray, for both coal and water gas, have been compared. Charts are also given in which the results for both Works "A" and Works "B" are combined.

In the water gas the curves at Works "A" and "B" do not vary very much, and have the effect of spreading the curve over a much greater range. In the coal gas there is a serious divergence for a portion of the curve. Of course, the burner used at Works "B" may have given different results from the burner used at Works "A," the kind of gas might affect these burners differently, and the two Works may not agree in photometric methods. Looking back on the tests, made in London by the Gas Referees, between the No. 7 Bray Economizer and the Carpenter burners, it is found that their results agree more nearly with those obtained at Works "A" with the E. H. lava tip. The London Gas World, March 2, 1907, gave for quite a lengthy period the results of tests of London gas by the Bray No. 7 Economizer, flat-flame burner, and the Carpenter No. 2, Metropolitan argand. These results show coal gas and mixed gas of from 11.9 to 9.5 candle power by the flat flame to yield from 16.6 candles to 15.2 candles by the Carpenter argand. These figures are merely the arithmetical averages of a great number of readings and at the various stations of three companies; they do not show results of tests of any one given gas by the two burners. Consequently, these figures are not precisely comparable with those given from Works "A," but they in general support these results. As is stated, at Works "A" the low candle power gases were obtained by cooling

richer gases and thus lowering their candle power, whereas the London gases were probably of normal quality; this would probably somewhat affect the comparative results of the London tests and those of Works "A." The tests made at Works "B" were made with a genuine Sugg's argand burner obtained in England, which is an official burner and gives better results than those obtained in America. At this Works they have never been able to obtain a genuine Sugg's argand burner in this country.

Question No. 24.

Answer By the Bureau of Information.

All the data that the Bureau has collected giving comparative results as regards fuel economy with the use of return flue gas as compared with pre-heated air and steam has been such as to not warrant any definite conclusions. Instances are now recorded where certain managers have claimed as low as 230 pounds fuel per ton of coal carbonized on one-half depth benches of 6's, equipped with a return flue gas system. If these figures are to be relied upon, they are approximately 70 pounds better than any record that we have been able to obtain on benches of similar construction where steam is used under the grate bars. On benches of 8's fuel economy of 200 pounds per ton of coal carbonized has been reached by actual tests where the return flue gas method is used. We know of no installation of 9's where the benches are equipped with the return flue gas proposition, whereas benches of 9's have been operated preheating the primary and secondary air, and using steam on the grate bars, where furnace fuel per ton of coal carbonized ran as low as 215 pounds, the coal used in all instances quoted being ¾-inch screened "Youghiogheny" gas coal.

As regards the clinker proposition, the return flue gas method prevents clinkers where same is properly operated. The heat regulation of a bench equipped with the return flue gas system is easy and simple. With Youghiogyheny gas coal, and coke made from same, there should be no trouble with clinkers and heat regulation where steam is used under the grate bars.

The Bureau wishes to add that it seems possible in practice to satisfactorily operate the coal gas furnace with a supply of one-half pound of steam per pound of fuel burned. Assuming water to be supplied beneath the grate bars at 60 degrees F., and that this water is evaporated at an average temperature of 150 degrees F., and that chimney gases are discharged at 950 degrees F., and that the mean specific heat of steam between 150 degrees F. and 950 degrees F. is .55, and that there is no waste at the chimney of unburned water gas formed from this steam, then the wasted sensible heat and latent heat of evaporation of this one-half pound of steam at the stack easily figures 758 B. t. u. Assuming the fuel to be coke having a calorific value of 12,500 B. t. u. per pound, this heat loss is 6.1 per cent. of the heat of the coke. This 6.1 per cent. would, therefore, seem to be the chief necessary waste of heat caused by the use of steam over the heat waste with the use of return flue gas.

The difference in fuel consumption which will be found in actual practice, may, however, differ entirely from what is indicated by the foregoing. In many cases the regulation of steam supply to the grate may be poor, and the average quantity used far greater than the foregoing one-half pound, with proportionately increased heat waste. Also the return flue gas system may give such better condition of fire as to cause less fuel loses in other ways; for instance, the loss of unburned fuel may be less, although there is no necessary difficulty in maintaining good fires with the use of steam.

Question No. 25.

Omitted. See Question.

Question No. 26.

Answer By the Bureau of Information.

In reply to this question, the Bureau will say that it will not attempt to go into the theory of the various hydrocarbon constituents of coal gas and water gas, but will confine its answer to an elementary statement of the conditions.

It is well known that with Pittsburg coal, yielding from 4.95

to 5 cubic feet of gas per pound, that the candle power varies from about 16.5 to 18.00, with the Argand Burner, and that the gross calorific value will be in the neighborhood of 650 B. t. u.

With water gas the question of heat value is largely dependent on the amount of oil used per thousand cubic feet of water gas made. A water gas of 22 candle power, with the results of 5.75 candle power per gallon of oil will give a gas of approximately 650 to 660 B. t. u. gross.

It is to be understood, of course, that if no oil were used at all, that the uncarburetted water gas resulting would have a calorific value of about 320 B. t. u. Adding oil increases the amount of those rich hydrocarbon constituents in the resulting gas, which have high illuminating and calorific values. Therefore, a considerable range in candle power and heat value can readily be secured in the manufacture of carburetted water gas simply by varying the amount of oil used per thousand cubic feet made.

In as far as the high illuminating value of carburetted water gas is concerned, it is to be said that this is simply due to the richer hydrocarbons resulting from the use of oil. These richer hydrocarbons are usually grouped under the heading of "Illuminants," and in order to cite the difference, an example is given from the operation of one large Works, as follows:

When obtaining about five cubic feet of gas per pound, from Pittsburg coal, the per cent. by weight of illuminants in the resulting coal gas was about 17.5.

That particular Works, on the same day, was making water gas, using 3.76 gallons of oil per thousand cubic feet of water gas made, and the resulting gas contained illuminants to the extent of 24.7 per cent. by weight.

In general, therefore, higher candle power of the water gas is caused by the higher content of these illuminants.

The Bureau wishes to call attention to the answers to Questions Nos. 21 and 22, which both bear on the subject of candle power and calorific value of coal and water gases, said answers having been previously published in the Journals.

Question No. 27.

Answer by the Bureau of Information.

The sweating of the kitchen walls, due to the installation of a gas range, is, of course, caused by the condensation of the water vapor formed by the oxidation of the hydrogen in the gas. The degree of sweating will, it seems, probably increase with the decrease in thickness of the walls and their consequent cooling by the outside air. It is possible for one particular cold spot of a room wall, and even chimney, to show sweating, while the other and better protected and warmer portions of the walls are free from it.

There seem to be several methods of preventing the sweating of the walls of a room where a gas range is installed. One is to change the range, another to better the ventilation, and still another is to prevent the escape of the products of combustion into the room. The first two may or may not be remedies, and the last seems to be the only sure preventative of the trouble.

The question hardest to answer is, "Why does a stove sweat in some houses and not in others using the same gas?" The only answer to this seems to be that one room is better ventilated than the other. There have been several cases where complaints of this character have been corrected by simply changing the range, and the only conclusion seems to be that the ventilation of the room was sufficient for a good range, but insufficient for a poor one. There is, of course, a relation between the effective ventilation of a room and the quantity of water vapor that can be permitted to escape into the room without giving trouble from sweating, and it may be that when these are nearly in balance a slight change in the efficiency of a stove, or in the quality of the gas, might throw the balance one way or the other.

It seems impossible, however, to forecast the result of a change of stoves, and the only sure method to adopt when a case of sweating is encountered is to prevent the escape of the products of combustion into the room. This can best be accomplished by installing a closed top range with a flue con-

nection to the chimney instead of the ordinary type of open top range.

Question No. 28.

Answer by the Bureau of Information.

Owing to the lack of data, and the short period of time for making experiments, the Bureau is able only to make the following general remarks:

Referring to paragraph "b": In two cases coming within the experience of one of the members of the Bureau, in taking over plants where the purifying capacity had been insufficient and where hydrogen sulphide had been present in the finished gas continuously, it was found that no serious damage had been done to the diaphragms or metal parts of consumers' meters. Carbon bisulphide frequently appears in the best purified gas in much larger amounts than stated, and no instances are known of its having done any damage, except possibly in the way of bleaching the diaphragms and its effect would be too small to be appreciable. Ammonia, even in small amounts, is much more likely to cause damage than the sulphur compounds.

The same Bureau member also makes the following comments relative to paragraph "c": Vaporized hydrocarbons of various characters, if in sufficient quantity, will affect the diaphragms of consumers' meters by dissolving out some of the heavier oils used to soften and keep them pliable. In extreme cases diaphragms have been known to become bleached in a very short time from the excessive use of hydrocarbon oils for clearing naphthalene from mains and services. It is also true that gases enriched with the lighter hydrocarbons are apt to produce this effect on a general district, but how much, or just what proportionate effect is produced by the use of different quantities and different qualities of these hydrocarbons is yet apparently open to experiment.

Answers at Large.

By Mr. J. Hawley Taussig, Philadelphia, Pa.

(a) Experience has shown that the detrimental constituents of any carburetted water gas for meter diaphragms are

the hydrocarbon vapors, consisting mostly of the benzol group. These vapors, when condensed or absorbed by the diaphragm oil will (as explained by Mr. J. M. Rusby in his paper read before the American Gas Institute in 1906) wash out the softening and protecting oils in the diaphragms. When later evaporated during a season when the gas is under-saturated, the diaphragms will be left in a bleached and porous state. The quantity of these hydrocarbon vapors will, of course, regulate the degree and speed of this washing process. The bleaching or drying part comes with the season of the year. We have found that by the use of some oils we get more bleached diaphragms than with others. Therefore, if we change from an oil where there is much hydrocarbon vapor made in carburetting, to one where there is comparatively little, we will get a better condition for consumers' meters, and the reverse is true of the opposite condition. Diaphragms will not be impaired by frequent changes in carburetting oil unless the changes bring oils into use that result in more hydrocarbon vapors in the finished gas.

(b) Carbon bisulphide is usually present in gas after purifying with iron oxide in the usual manner. In our works we send out more than 5 grains per 100 cubic feet. This, after years, has shown no detrimental effect. We have no experimental data as to whether 5 grains of H_2S per 100 cubic feet of gas will injure diaphragms or metal parts nor have we heard of such an experiment being made. We believe, however, that there will be no appreciable injury in 6 months' time under such conditions.

(c) The use of vaporized hydrocarbons or gasoline introduced into the gas will have only the effect of hastening the washing and bleaching process, thus making the meter diaphragms porous and stiff, and causing the meters to prove fast. In that condition they will probably not pass the slow motion test and will have to be re-oiled.

With the dipping process, explained by Mr. Rusby in the paper above referred to, there will be no bad effects from the use of any hydrocarbon, either present or put into the gas artificially, as it prevents bleaching entirely.

By Mr. J. M. Morehead, Chicago, Ill.

(a) In my opinion changes in the kind of oil used in a water gas machine does not affect the diaphragm of the consumer's meter. Any change in the oil will mean merely a change from one kind of mineral oil or distillate to another kind of mineral oil or distillate of practically the same chemical composition, and while such changes would affect the amount of tar and other conditions in the generators, I think the products of distillation which eventually reach the consumers' meters would be the same. That is to say, the methane and illuminants which result from the oil added in a gas machine are practically independent of whether the enriching material was crude oil, gas oil or naphtha.

(b) The long continued exposure of the working parts of a meter to gas containing a large amount of carbon bisulphide, or sulphuretted hydrogen, would result in the deterioration of those parts. The effect, however, would be greater upon the metal than upon the oil-soaked diaphragm, although both the metal and the other parts would suffer.

(c) I do not think that the introduction of gasoline or other vaporized hydrocarbons would affect the meter diaphragms. If large quantities of gasoline came directly in contact with the diaphragms, some of the animal oil with which diaphragms are treated would be dissolved, but the amount of vapors carried along from the gasoline introduced into the mains is so small that, so far as the diaphragm is concerned, it amounts to having a gas with a small percentage more of illuminants. Chemically, and in other respects, gasoline vapors behave precisely as benzine vapors which comprise a very large part of the illuminants ordinarily found in water gas.

Question No. 29.

Omitted. See Question.

Question No. 30.

Answer at Large by Mr. C. O. Bond, Philadelphia, Pa.

It would seem that the question is meant to cover two points; the relative accuracy of, first, enclosed and open photometers;

second, of 60-inch and 100-inch bars. For a reply to the second part, the inquirer is referred to the 1907 report of the Committee on Methods of Taking Candle Power of Gas.

As to the first part, both open and closed bar photometers claim their advantages, not through any principle involved, for the photometric principles are identical, both in the adoption of exterior conveniences, either for the comfort of the photometrist, for the prevention of draughts, for the protection of the photometer disk from extraneous light or for some other reasons.

With the enclosed photometers, as the name indicates, the light sources are in compartments of limited size, connected by a tunnel in which is placed the disk. The object is to preserve an extremely quiet flame and, at the disk, to exclude all light other than from the compared sources.

The photometrist also is, to a greater or less extent, forced to place his head in the enclosed part, to his discomfort, especially in hot weather. In the attempt to properly ventilate these flame compartments there is often created a local draught which defeats the very object sought. At any rate the temperature of the inclosed portion is measurably raised, and as a rule the effects of vitiated air are more apparent than with the open photometer. The inner surface of the tunnel also may become appreciably reflective, thereby causing an error.

The open photometer permits the burning of the flame in a natural manner. The prevention of draughts is then a question of room construction. The flames may be viewed from many angles, instead of through a sight glass, to insure their proper condition. The photometrist stands or sits naturally while at his work.

It has been considered necessary with open photometers that the room must be light, tight and painted black, and it is good practice to follow that plan from the beneficial preparation it gives the retina for accurate work. But a scientific investigation of the subject, by Dr. E. P. Hyde, has been published at the Bureau of Standards, Washington, in which it is clearly demonstrated that, with sufficient light diaphragms interposed

along the path of the rays from the light sources to the photometer disk, no error results, even when the walls of the room were white and two other lights were burning in it, the windows being curtained. (See reprint No. 20, Bureau of Standards.)

From the above facts it would appear that the open type of bar photometers is much to be preferred.

Another point may be added: In case of fire caused by either of the flames, it can easily be gotten at in an open photometer, while in a closed one it cannot.

Question No. 31.

Omitted on account of being of an advertising nature.

Question No. 32.

Answer by the Bureau of Information.

We do not know of an instance where the price of gas has been raised in the manner suggested in the question. There have been cases where competition has for a time placed the gas rate at a low point that was later re-established on a fair basis.

Companies which formerly sold gas for lighting purposes at one rate and fuel gas at a lower rate have eliminated the double installation of meters, by making a reduction in their lighting rate to that of the existing fuel rate.

It seems that the question reduces itself to a matter of how to produce the greatest net earnings. Most companies will probably advise you that within a short time they were, through increased sales at a lower rate, able to make up the decrease brought about by the reduction.

While it is expensive to maintain a double installation of meters, this expense is probably small compared with the revenue yielded by the higher rate at which illuminating gas is sold.

Our conclusions would be:

First, that there is no precedent for equalizing the prices of gas used for both purposes, if this requires a raise in price charged for fuel gas.

Second, that while the equalizing of prices would appear to tend to reduce the future possible earnings of the company,

general experience would seem to show that it rather increases it.

Answer at Large.

By J. P. Butler, Omaha, Nebraska.

There is only one answer to Question No. 32, assuming that the conditions cited cannot be altered.

Use one meter, charge $1.50 per M. for an initial amount, based on either the size of the house, number of illuminating burners, or some combination of these or other influencing factors, and charge $1.00 per M. for all amounts in excess of this initial quantity.

As an example of a charge made on this basis the Omaha Electric Light and Power Company is cited whose light rate is 14 cents for the first one and one-half kilowatt hours for each 16 c. p. lamp and 6 cents per kilowatt hour for the remaining amount in excess of this.

Question No. 33.

Answer by the Bureau of Information.

In endeavoring to compile an answer to this question, the Bureau encountered considerable difficulty and lack of experimental data and, therefore, one of the members of the Bureau kindly voluntered to have carried out a series of experiments, which are set forth hereinafter.

These experiments were made by Messrs. F. E. Park, Chemist, and J. W. Batten, Superintendent Station "A" of the Detroit City Gas Company. The Bureau did not wish to consider the results of the experiments which these gentlemen made, in the light of an answer at large, and, therefore, did not publish the results of their work as such, but nevertheless the Bureau desires to extend credit to these gentlemen for the work they have done in this instance.

The experiments, together with the method of altering the formula to suit the particular instance covered by the experiments, are as follows:

Below are the results of passing dry gas through a small candle power test meter, at the rate of five cubic feet per hour, noting ability of dry gas to pick up moisture at this rate, and the effect on accuracy of measurement:

Temperature	Per cent Saturated	Correction to be added
60.2° F.	86.2	0.25%
61.0	75.6	0.45
64.2	67.5	0.68
66.0	68.3	0.70
67.3	94.9	0.12
69.7	71.9	0.71
71.0	83.3	0.44
75.6	83.3	0.17
77.0	74.1	0.84
80.5	80.3	0.73
80.5	82.1	0.66
85.0	74.3	1.09
85.0	71.7	1.20
90.0	88.4	0.59
91.0	86.8	0.69
94.8	91.8	0.49
98.3	97.9	0.14
102.0	95.8	0.32
	Average 81.8	0.57

The following tests were made of the saturation of the gas with water vapor at the outlet of a large wet meter. The gas used was coal gas which had been cooled to 75 degrees F., and at the outlet of the rotary scrubber raised to 110 degrees F. by means of exhaust steam. It then passed through the purifiers and thence through a line of 24-inch pipe about 600 yards long. From here it passed into and through the wet meter:

Temperature	Per cent Saturated	Correction to be added
88.0° F.	77.2	1.11
88.0	75.3	1.20
91.0	83.7	0.86
91.0	79.5	1.07
93.5	80.0	1.13
93.5	76.6	1.33
	Average 78.7	1.12

The following test and check were made at outlet of coal gas proportional meter at lower by-pass valve:

Temperature	Per cent Saturated	Correction to be added
122.0° F.	70.5	4.00%
122.0	74.4	3.60
	Average 72.5	3.80%

The result at the proportional meter is likely in error, due to the high temperature.

The following fomula was used to determine the weight of water in saturated gas:

V = Volume of gas in cubic feet, as measured:

B = Barometric pressure, in inches;

P_t = Vapor pressure of water, in inches, at temperature "t" degrees F.

$$\frac{V\ P_{t'}}{B} \times \frac{520}{460+t} \times \frac{30}{B} \times \frac{18}{0.834} = \frac{V\ P_t \times 336700}{B_2\ (460+t)}$$

520 is the absolute temperature at 60 degrees F., 450 + t is the absolute temperature at t° F., and 0.834 is the molecular volume in cubic feet at 30° barometer pressure and 60 degrees F.

This formula checks with the Smithsonian Institute tables.

Vapor pressure values were taken from Regnault's tables.

In figuring the gas passing through the meter in the tests at the outlet of large meters, a correction of 0.57 per cent. was added to the gas measured, as this was a case where dry gas was being measured through a candle-power test meter at the rate of 5 cubic feet per hour. The same meter was used as in the tests on dry gas. The effect of this correction on the results is negligible.

In each test half a cubic foot was run, and two calcium chloride tubes were used in the train. All but 5 per cent. of the moisture was caught in the first tube. The tubes were weighed to milligrams.

It was not possible to get results below 80 degrees F. without artificially cooling the gas. The results with dry gas would indicate that the per cent. of saturation does not change much below 60 degrees F. and 80 degrees F.

In the light of the above tests the proper correction formula would be as follows:

$$N = \frac{17.64\ (h - 0.787\ a)}{460 + t}$$

$$\text{or } V_{60} = V_t\ \frac{17.64\ (h - 0.787\ a)}{460 + t}$$

h = observed barometer:

a = vapor pressure at t°F.

To derive the Gas Referees' formula: Considering temperature alone on a perfect gas, we have:

$$\frac{V_{60}}{V_t} = \frac{460 + 60}{460 + t} = \frac{520}{460 + t}$$

Considering the barometric pressure, and also the temperature effect on the gas saturated with water vapor at t degrees F., and at 60 degrees F., we get:

$$\frac{V_{60}}{V_t} = \frac{h - a_t}{30 - a_{60}} = \frac{h - a}{30 - 0.52}$$

$$= \frac{h - a}{29.48}$$

Combining the two equations, we get:

$$\frac{V_{60}}{V_t} = \frac{520\ (h - a)}{29.48\ (460 + t)} \quad \text{or,} \quad N = \frac{17.64\ (h - a)}{460 + t}$$

To derive this formula by another method:

$$V_o = V_t \frac{h - a}{30\left(1 + \frac{t - 32}{492}\right)}$$

$$= V_t \frac{492\ (h - a)}{30\ (460 + t)}$$

$$= V_{60} \frac{h - a}{30\left(1 + \frac{t - 32}{492}\right)}$$

$$= V_{60} \frac{492\ (h - 0.52)}{30\ (460 + 60)}$$

Then, $$\frac{V_{60}}{V_t} = \frac{492\ (h - a)}{30\ (460 + t)} \times \frac{30\ (520)}{492\ (h - 0.52)}$$

$$= \frac{520\ (h - a)}{(h - 0.52)\ (460 + t)}$$

But at 60° F., $h = 30$

therefore, $$V_{60} = V_t \frac{520\ (h - a)}{29.48\ (460 + t)}$$

$$= V_t \frac{17.64\ (h - a)}{460 + t}$$

or, $$N = \frac{17.64\ (h - a)}{460 + t}$$

In commenting on the particular experiments by Messrs. Park and Batten, the Bureau wishes to state as follows:

The question inquires, "Should not this water vapor be taken into consideration in correcting to the corresponding volume of the gas at some arbitrary temperature such as 60° F.?" As shown by Messrs. Park and Batten, the ordinary tables of gas correction factors are computed from the formula:

$$\text{Correction factor} = N = \frac{17.64\ (h - a)}{460 + t}$$

which covers the effect of water vapor upon the volume of the gas. Consequently, these tables already effect the result recommended by the question.

Messrs. Park and Batten's experiments appear to show the possibility, at least under certain conditions, of a gas not completely saturated with water vapor passing over water and still failing to thereby become saturated with its vapor. It is easy to believe that this will be the case where, for instance, the surface of the water is more or less covered with oil, which will doubtless greatly retard the evaporation of water; it may even be true where the surface of the water is free from oil, but a somewhat dry gas passes over it rapidly, or where the gas is exceedingly dry, as was the case in some of these experiments. Consequently, for instance, it is possible for a gas which has been cooled and its moisture precipitated to thereafter pass through, say, a station meter and emerge only partially saturated.

If, however, a gas is thoroughly water vapor saturated at any point in the works, and thereafter steadily falls in temperature, there seems no reason that it should not at every such lower temperature remain completely saturated with water vapor, and the ordinary table of correction factors will apply to the correction of its volume to 60°.

As is shown by these gentlemen, under ordinary conditions and at ordinary temperatures the gas is somewhere near saturation, and the error caused by the ordinary table of correction factors is small. The only *absolutely* correct method, however, appears to be to determine the percentage of water

vapor saturation actually existing in the gas and substitute this percentage in the general formula, as has been done by them, they obtaining the modified formula for 78.7% saturation:

$$V_{60} = V_t \frac{17.64\ (h - .787\ a)}{460 + t}$$

It would hardly be proper to consider the experimental data hereinbefore submitted as entirely conclusive, or as a proper basis for a general answer to the question. The conditions in practice, and in various plants are different, and the Bureau would state that in any particular instance it would be probably advisable to make long series of experimental determinations at the plant in question, and considerable study of the matter before a departure from the Referees' formula for the correction of gases should be undertaken at the works in question.

Question No. 34.

Answer by the Bureau of Information.

The hygrometer, as described in the paper alluded to in the question, was designed to afford a means of obtaining, with a fair degree of accuracy, a quick determination of the dew point of illuminating gas for hydrocarbon vapors and for water at any point in the mains or works. The scope of the use of the instrument is not here brought into question. The instrument follows closely upon the scientific principles of the instrument designed by Regnault (See Annales de Chemie et de Physique 3, xv, 129). In describing his instrument and method of operation, Regnault says:

"All these operations take more time to describe than to execute; with a little practice three or four minutes are necessary for determining the dew point almost within 1/20° C."

When we consider the length of time in which these principles have been in use without suspicion being excited as to their accuracy, it may be considered that the hygrometer has been accepted as an accurate instrument for a long time by scientific men.

The instrument has been tested many times against other

methods of determining the dew point, and the following results were recently obtained on the freezing coil experiment at one of the works in Philadelphia:

Temperature shown on coil	Temperature indicated by hygrometer
80 deg. F.	80 deg. F.
70 "	70 "
60 "	60 "
50 "	50 "
40 "	40 "
35 "	36 "

That is to say, when the gas was chilled by being passed through a down coil to a temperature lower than that which it had before experienced, the thermometer at the bottom of the down coil showed the same temperature as the dew point ascertained by the use of the hygrometer.

On a test in the laboratory, the gas from the laboratory pipes was tested with a hygrometer and it was found that 71° F. was the dew point of the water vapor. A gravimetric determination was then made and water was found corresponding to 72° F. On a second test, the gas was passed through a freezing coil, the thermometer in the gas showing that it had been subjected to a temperature of 34° F. The moisture was then determined with calcium chloride and found to be sufficient to saturate the gas at 33.5° F., while the hygrometer showed 34° F.

It was pointed out in the paper mentioned that the determination of the temperature of the gas by a thermometer at the point at which it was tested would not generally be reliable in showing the temperature at which the gas was saturated with hydrocarbon vapor. It was also shown that this latter knowledge was necessary to secure a uniform candle power at the testing station, because if the gas had been cooled to a considerable extent and afterwards rewarmed in the mains, such as to use the illustration quoted in the paper—of a gas passing through a pipe under a bridge and afterwards reentering the warm ground—it would lose more in candle power in arriving at the testing station than another gas not having been exposed to the same fall in temperature which

might occur during consecutive days in the same plant, where on the second day the outside temperature would not chill the gas in passing under the bridge below the temperature of the ground, the atmospheric temperature having warmed up in the meantime.

The hygrometer is the only apparatus that will permit of such a determination being readily made, quickly and accurately.

The usefulness of the instrument can be illustrated by citing the following case:

In Philadelphia the City Inspector reads the candle power at a testing station one mile from each of the works. At testing station "B" the 30-in. gas main, from which the service leading to the testing station is taken, runs on the opposite side of the street from the station. Several years after the service was laid, the Water Department in running a 20-in. water main on the near side of the street to the testing station, that is, between our 30-in. gas main and the testing station, found it necessary to raise this service pipe to get their main under it. They raised it until it laid just under the Belgian block paving, and this point being much nearer the surface of the ground than any other point in the service or in the 30-in. gas main exposed the gas to a chilling effect in the service that was not experienced by the gas in the 30-in. main, and which would not be shown on a thermometer inserted into the service in the basement, because from this high point the service again dipped deeper into the warmer ground and did not show any loss in temperature, yet the chilling of this gas due to this high point reduced the candle power of the gas below what it would have been if it had not been exposed. Now the expensive feature was that the gas that flowed through this service was considered as a sample of the gas in the 30-in. main, and in order to reach the required 22.5 candle power for this sample at the testing station it was necessary to increase the candle power of all the gas sent out from that works, amounting, during the winter time, from 18,000 M. to 20,000 M. cubic feet per day. The hygrometer detected this

fault in the service. It was found that the hygrometer showed a temperature considerably less than the temperature shown on the thermometer placed in the service in the basement. A further test by the hygrometer on the gas issuing directly from the 30-in. main showed the cooling effect between the 30-in. main and the basement. The service was then dug up and the cause of the cooling was exposed. This alone cost the company many thousands of dollars.

To cite another illustration as showing misleading information given by a thermomter, at one of the holder stations the main leading to the station was laid about forty-five years ago, and, owing to the filling that occurred in the street since then, the main is about fourteen feet below the surface of the ground. A thermometer dropped into the main at the inlet to this holder station will not show a variation of more than 3 deg. during any time of the year, while a hygrometer will show a variation of 40 deg. between the highest point of saturation with hydrocarbon vapors in the summer and the lowest point in the winter.

The hygrometer as described in the paper mentioned, it must be noted, had a defect. It was found difficult to read dew points below 33 deg., particularly if the air that was bubbled through the pentane was obtained from a room of comfortable temperature in which several flames had been burning, such as a photometer. There was sufficient water vapor in such an atmosphere that when bubbled through the pentane and cooled to the freezing point would make a deposit of frosty material on the inside of the bulb, tending to confuse the observer as to the exact dew point. If the test were made in a cold atmosphere, where there was not so much water vapor present, this would not be noticed as a disturbing factor.

In the new form of hygrometer, instead of using air from the room, a small stream of the gas itself is forced through the pentane by the main pressure. Of course, this gas having the same amount of moisture in it as the gas to be tested will deposit no considerable quantity of water vapor before the dew point is reached.

An objection to both the old and the new form hygrometers is that the bubbling of the pentane washes off the black markings of the thermometer scale. When this occurs the thermometer should be taken out and India ink used to reblacken the etched glass markings of the scale.

Another feature should be noticed. There appears to be, under some conditions, a lack of agreement between a hygrometer dew point and the temperature of the gas coming off from an up coil. This, of course, is due to the entrained vapors in the up coil, because in all such instances the hygrometer has shown a higher dew point than the temperature at which the gas eminates from the up coil.

Inasmuch as these divergencies appear to occur (when they do occur) at the lower temperatures, it might be well to use a down coil instead of an up when a low temperature is selected at which the gas is to be chilled on its road to the photometer—say 35 deg.

Several years' experience with the daily operation by a number of observers, with 70 deg. up coil, has not disclosed any such contradictory readings as is cited above.

There is one condition, however, where it has been found that the hygrometer, in its present form, can not be used, namely, when the gas of which the dew point is to be taken is much warmer than the surrounding atmosphere. This condition was encountered in the winter time when trying to find the cooling effect of the gas passing through an exposed main on a long bridge. This was a pumping main without any services taken off it, and it was found that during severe weather vapor condensed on the outer tube and obscured the reading of the hygrometer.

Another instance occurred when in a certain case it was desired to obtain the dew point of the gas at the inlet to a station meter. The temperature of the meter room being quite low, and the temperature of the gas between 80 deg. F. and 90 deg. F., it was found impossible to get the hygrometer reading on account of the condensation of moisture on the outer tube.

Still another illustration was at a plant of one of the Steel Companies, who were endeavoring to get the saturation point of the enriched blast oven gas which had a dew point of 110 deg. One can readily understand that such a gas would be troublesome in the hygrometer, because any atmosphere at a temperature below 110 deg. would surely cause condensation to form on the outer tube. This shows that the hygrometer, in its present form, must be used in a room at a temperature higher than the dew point of the gas to be examined.

Question No. 35.

Answer by the Bureau of Information.

What is known as gas oil is that product of oil refining that remains after the naphthas, kerosene and lubricating oils have been removed, and since the work of the refiner is concentrated on getting the greatest quantity of these more valuable products from his crude material, a gas oil may be considered somewhat in the light of a by-product. It is evident, therefore, that since the refiner cannot control the nature of the crude material that comes from the ground, we must expect considerable variation in gas oils from different territories if not from the same refinery using the same crude oil.

Specifications to be of value must narrow down the limits of the quality of the oil furnished thereunder, and unfortunately the grades of oil from different territories are of such diverse natures that it would appear impossible to conform to a useful set of specifications that would not involve great complication and probable inability to prove conclusively serious infractions of the specifications. It would, perhaps, be wiser to ask for tenders of oil with samples of the oil that each bidder proposes to furnish. These samples should be sent to competent consulting engineers, who would advise the company as to their relative values. Having then determined upon the field from which the oil was to come, specifications as to the gravity and homogeneity could be drawn up that would safeguard the company against inferior material and would make the detection of this inferior material by test not so laborious as to render the use of the test impracticable.

QUESTION No. 36.

Omitted. See Question.

QUESTION No. 37.

Omitted. See Question.

QUESTION No. 38.

Omitted. See Question.

QUESTION No. 39.

Omitted on account of being of an advertising nature.

MR. BAEHR: (Reads report.) Now, gentlemen, I wish to submit a small supplementary report, which merely contains the questions which have been submitted since the first report of the Bureau was written.

I wish to add a few remarks in connection with the work of the Bureau. This work has evidently been misunderstood by some people in the gas business. For instance, a considerable number of the questions which were received, were from men who managed several properties, and consisted of inquiries as to the processes and results and processes, costs, and so forth. In other words, it is self-evident that such questions should have been submitted to a consulting engineer. Evidently it was not made clear that the Bureau is not acting as a consulting engineer, and this point is well worth noting. The Bureau did not include in its report a number of questions of this nature inasmuch as they were entirely foreign to the work in hand.

(The supplementary report of Mr. Baehr is as follows:)

SUPPLEMENTARY REPORT OF THE BUREAU OF INFORMATION—AMERICAN GAS INSTITUTE. FOR CURRENT YEAR, 1908.

This supplementary report includes certain information which was not covered by the main report of the Bureau. It contains principally the information as to whom questions which have not as yet been answered, have been submitted, and also contains the additional questions which have been received too late to be attended to by the Bureau this year.

The following questions have been published in the Journals

and have been assigned to Bureau members to answer, but as yet no answers have been made up.

Question No. 10.

"Can the Bureau of Information inform me if there is any particular kind of anthracite broken coal adapted for water gas manufacture? If so, from what region or vein is this coal mined?" This question has been assigned to Mr. J. M. Rusby, who is experimenting to get data for an answer.

Question No. 25.

"What rule and method should be followed in designing condensers to remove condensation from compression of gases?"

Assigned to Mr. W. E. McKay.

Question No. 29.

"Does very rapid condensation tend to reduce the permanent illuminating power of coal gas? Experience shows that the illuminating power of coal gas, when condensed very slowly is considerably higher at the works than when the gas is condensed very rapidly. In the latter case, however, there is apparently much greater loss of illuminating power in the distribution, especially in cold weather, due to the condensation of the heavier hydrocarbons. It is evident that it is possible to install gas-condensing apparatus costing less than half what the approved apparatus costs, but in which the work would be done very rapidly and also very efficiently so far as the use of cooling water is concerned. Would the use of such apparatus result in an appreciable loss of illuminating power at the consumers' burners as compared with the use of the present approved types of apparatus?"

Assigned to Mr. W. E. McKay.

Question No. 36.

"What is the mean spherical candle power of the standard candle? Is there any objection to taking readings of candle

power at the angles used for determining mean spherical candle power instead of every 10 or 15 degrees as is customary at present? It would greatly simplify the present method of determining MSCP."

Assigned to Mr. W. H. Gartley.

The following questions have been received but have not been published or assigned to any Bureau members, as they came in too late.

Question No. 37.

"Will the Bureau of Information furnish me with the analysis of the fire brick that is considered of good quality for checker brick work in carburetter and superheater?"

Question No. 38.

"We have a green house man here who is very anxious to heat his green house with our 23 c. p. water gas, using it in a Boynton Furnace. We are advising against it but he says he will not object to paying up to $800.00 for the season. The green house is exceedingly well built, mostly of glass, with 5,500 feet of radiation, which keeps it amply warm with soft coal.

"The furnace is No. 191, as shown on page 40 of their 1905 catalogue.

"We would expect to take him on about an 80 cent rate.

"What is your opinion? Should we come anywhere near $800.00 for the season? Are there any installations in use where artificial gas is used in hot water and steam residence work?"

Question No. 39.

Omitted on account of being of an advertising nature.

Question No. 40.

"Does any apparatus exist by which ordinary illuminating gas can be used in connection with the 'Prest-o-lite' tanks for furnishing illumination for automobiles?"

Question No. 41.

"What is the difference in the number of candles of light ob-

tainable from a gallon of kerosene oil as used in coal oil lamps, for illuminating purposes, and 100 cubic feet of 18 c. p. gas?"

THE PRESIDENT: Of course this report will go into the Proceedings in full. It might be well at this moment if I called attention to the fact that the Directors passed this matter over to the incoming Technical Committee with certain suggestions, and in one instance an instruction, namely that questions to be answered must be submitted by members. It did not seem proper to the Board that this Bureau of Information should be thrown open to the world. No action is necessary, except that, of course, we ought to feel extremely grateful to the committee that had charge of this work, and especially to Mr. Baehr for the work that has been performed by the Bureau during the year, it has necessarily been very burdensome.

REPORT OF BOARD OF REVISION OF THE QUESTION BOX ON THE MANUFACTURE OF GAS.

MR. J. D. SHATTUCK: This committee was instructed to treat the subjects of coals, carbonization, condensing, scrubbing and purification. That leaves, as you know, a considerable part of the question box that has not been touched upon as yet—questions of general works operation, water gas manufacture, new business and legal questions.

Considerable of the data of the question box, and much of the information referring to the various subject heads was incomplete, and in addition to sorting out the best answers, we have had considerable information to supply to make the treatise more intelligible.

Some subjects that were incomplete, we have handled by asking engineers to write special articles on them, and such articles have been incorporated.

It is impossible to give proper acknowledgment to all the gentlemen that have helped us out, but I will especially mention Dr. Harrop, who laid out this broad scheme, and whose matter was turned over to us.

THE PRESIDENT: You have heard the report. No action

is necessary unless there are some questions you wish to ask Mr. Shattuck. The report will, of course, be printed in full in the Proceedings.

(This report will be found in the Appendix.)

Mr. Stone: It is only fair to Mr. Shattuck and Mr. Klumpp to say that they did practically all the work of this committee. When we came to do the actual work, it was found that although I was a member of the committee, I was so far distant from the scene of operation we could not work together to advantage. Mr. Shattuck and Mr. Klumpp consulted together and did most of the work.

The President: I am sure the Institute feels very grateful to Mr. Shattuck, Mr. Klumpp and Mr. Stone for the work they performed this year. Those of us who sit by and look on cannot appreciate how much work is included in such an undertaking.

I want to announce the final committee which has been appointed at the request of the Director of the Bureau of Standards at Washington, to assist in connection with the subject of unit of light and other matters, the committee having been given power in connection with the unit of light, but not power in the other direction, simply to advise with the Directors; and at the Directors' request we have appointed the President, the Junior Past-President, Mr. Gartley and Mr. Glasgow—and particularly Mr. Glasgow, because he and his associates have been working on this matter now for a year or more in London and can do it, of course, with greater facility than can any of the rest of us. I would add to that committee Mr. R. B. Brown, chairman-elect of the Technical Committee.

Mr. Taussig will now read his paper, "Vertical Retorts."

Mr. Taussig then read his report and illustrated it with stereopticon views.

Vertical Retorts and Other Systems of Coal Carbonization.

The two great struggles in the development of coal gas apparatus during the past hundred years have been to reduce the bench fuel and to lessen the retort house labor, as well as to make it less severe. To these two objects we can trace almost all of the improvements in the design of our settings to-day.

The Siemens regenerator, which came out in 1861, was undoubtedly the inspiration by which gas engineers conceived recuperation. Previous to this, the progress had been to first displace iron retorts with clay, then to change the shallow fire to a deeper one and admit secondary air over the fire, then to make the so-called "gaseous firing" by passing the secondary air around the walls of the producer, or under the combustion chamber floor, and finally to the recuperators, as designed by Ponsards and Lemcumely, the former using hollow tiles very much like the present Klonne recuperator, and Lemcumely used vertical tile pipes. During the next twenty years great progress in recuperators was made.

Tests made by Dr. Fischer, at the Hanover works in 1880, showed that the different systems in Germany at that time gave the following results in per cents of coal carbonized:

Direct fire	23%
Stetten recuperators	19
Liegel slit recuperators	15
Klonne grate	13

Since that time some English and Continental makers have reduced the bench fuel to 9% of the coal carbonized. The limit to recuperation might be said to be the heat necessary in the waste gases, to give the bench sufficient draft, and has been placed at about 500°.

The return of a portion of waste gases to the ash-pan has

been in use for many years in producer gas plants, but was not generally used in the coal gas producers until the last few years, and was brought out by Mr. H. L. Doherty in this country.

Mr. W. A. Baehr discussed the advantages of this method in his paper written for the last meeting. The total loss from the use of ½ lb. of steam per lb. of coke is 6%, which, if all could be saved, is worth while. Any further fuel saving from this system would come from good recuperation. This system, however, has the advantage of keeping the clinker down.

There is still room in this connection for more efficient heat insulation of the benches, for much of the high fuel in modern inclines, verticals and horizontals can be traced to radiated heat. Poor adjustment of dampers and inattention to fires are also responsible for high fuel, but these come mostly from the personal equation of the managers and foremen. However, we still have not in general use systems by which we can maintain automatically a fixed proportion of fuel gas and air, so that there may always be efficient combustion. The writer saw a system for this purpose in Brussels, invented by M. Bromham, engineer of the municipal plant.

In regard to labor saving devices and installations, let us look back to the early days and see the efforts of our predecessors.

The first successful apparatus for charging and discharging was perfected by Beal and Holden in 1865, and was used in London and Dublin. This resembled in principle the present Bronder machine.

In 1873 the Foulis hydraulic machine was brought out. This was followed by the West machine, the subsequent developments of which are well known.

The first of the projected type was patented by M. Bremond, in 1881. This had a paddle wheel projector.

In 1886, J. Steel brought out a steam jet charger, which was afterward developed by Mr. A. Q. Ross, of Cincinnati.

The above were the forerunners of our present efficient devices for handling coal and coke in horizontal retorts, which are now represented by the Fiddes-Aldrich, one-stroke machine, the DeBrouwer centrifugal charger and ram, the Kobold, a German centrifugal machine, the Paris type of centrifugal machine, the West, the Bronder, and others.

All of these have proved serviceable under the wear and tear of retort house operation.

The expense of maintaining charging and discharging machines led to the development of the inclined retorts. Large plants of inclines are found in nearly all of the large works abroad, and have the advantage of having, aside from conveyors, little machinery connected with them. They, however, require the operators to be exposed to considerable heat, and after they have been running for several months almost invariably require poking to discharge. They also, like the horizontals, have stand-pipe and hydraulic main troubles.

The subject of coal gas manufacture is of increasing importance, and the various systems of coal gas carbonization are of growing interest to the gas manager. For this reason, investigation was made of the later developments abroad, the results of which follow.

Vertical Retorts.

The history of the vertical retort dates back many years, but it has been in successful use for the manufacture of illuminating gas, only a few years. Over thirty years ago, in Blanzy, a vertical Apolt oven was installed for making coke, and all the gas was used for heating the ovens. Little was learned from this installation that has been of use to those who have been developing the present vertical settings.

A few miles outside of Darmstadt there are some vertical retorts for distilling shale, which have been in operation for many years. They were heated by a producer contained in the setting, and the shale coke was used for fuel. This setting, although crude, contained many features found in the modern settings.

In Scotland they have used vertical retorts also for distilling oil from shale, at least as early as these German retorts, and perhaps earlier. Continuous systems were devised to handle this shale as far back as 1870, and have been brought to a high state of perfection.

Any one contemplating the design of continuous vertical retorts for coal carbonization, would do well to visit Scotland and see the large plants at Broxburn and Pumpherston. These installations distil 1000 tons and 750 tons of shale a day, respectively.

Their continuous discharge systems have worked without trouble for years. The cut shows the arrangement of a typical shale setting.

Woodall-Duckham: Messrs. Woodall and Duckham have so far met with more success with the use of gas coal in the continuous process than any of their predecessors or contemporaries, but their progress has not been easy. A detailed account of what they have done may be found in Mr. Woodall's paper read before the last English Gas Institute meeting (see London Journal, June 23, 1908).

The plant at Bournemouth consists of four benches of 4s. This plant is operated whenever the demand for gas requires it.

Woodall and Duckham's original design involved the use of a water seal at the lower end of the retort. This feature has not proved a commercial success. The top mechanism is a revolving hollow cock, arranged to feed two retorts. This is turned by a ratchet driven by an electric motor. The arrangement is a good one. The coal is not forced into the retort, but the cock simply revolves full of coal, without feeding, when there is not room in the retort below.

The bottom arrangement consists of a table directly under the retort, and a scraper moving across the table which pushes the coke off upon the conveyor below.

As far as could be seen, there was no reason why this part of the apparatus should not be an efficient coke discharger.

The part that has given most of the trouble with the lower

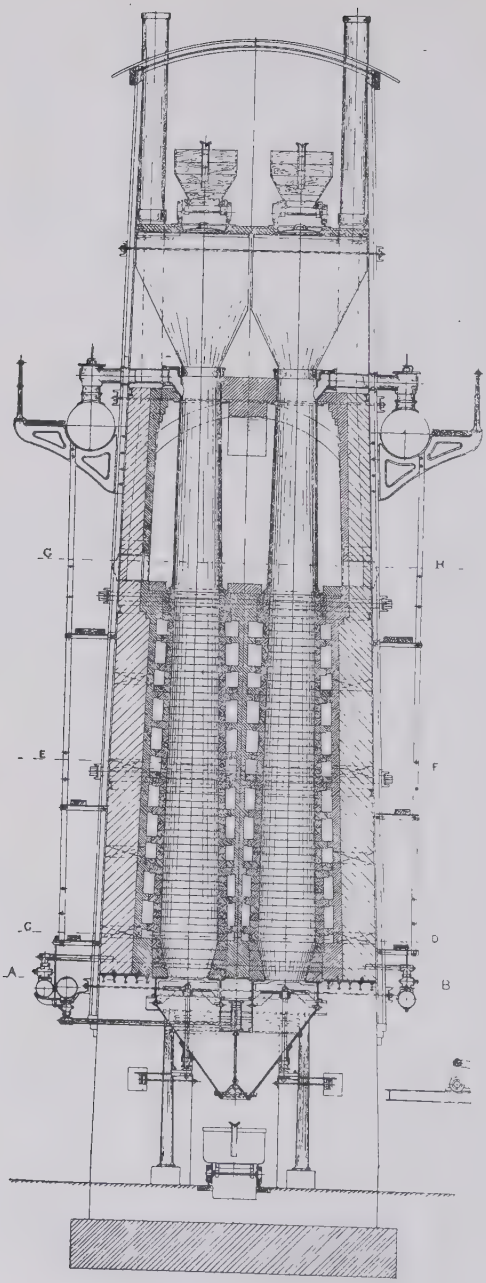

FIG. I.—PUMPHERSTON SHALE RETORTS.

mechanism is undoubtedly the arrangement for conveying the coke from under the retorts.

At Poole, Messrs. Woodall and Duckham have erected an experimental plant consisting of one retort, heated with blue water gas. The top mechanism is a rotating cock, similar to

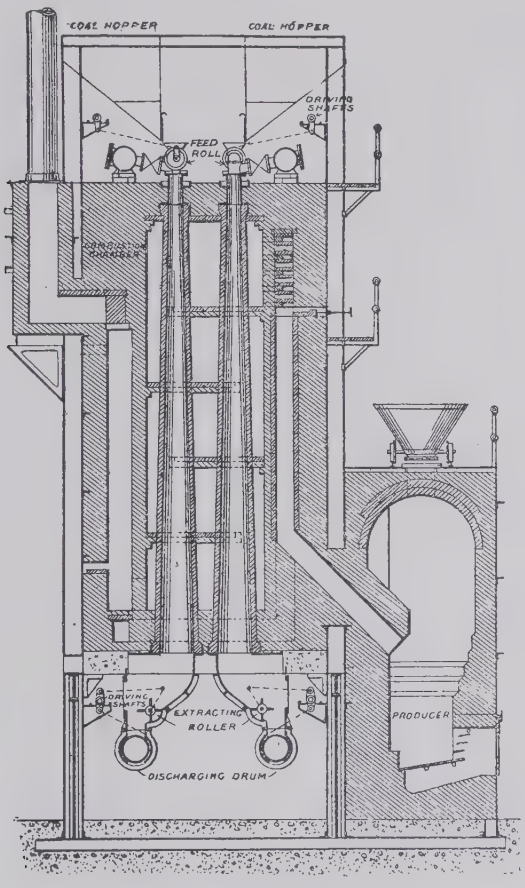

FIG II.—WOODALL-DUCKHAM SETTING.

the one at Bournemouth, but arranged for feeding one retort only.

In the bottom mechanism the inventors have made their greatest improvements. Attached to the retort is a casting

turned down from one end in such a way that it takes the weight of the coke in the retort, at the same time allowing it to feed to a toothed roller which picks off the coke as it is revolved. The coke thus taken falls into a cock, similar to the feed cock, but much larger, which, in turning, discharges the coke.

The upper and lower mechanism are operated by small motors.

The speed adjustment for the moving parts is very simple. The whole apparatus runs very smoothly and is under perfect control. They claim that this new design will handle successfully almost any kind of coal.

The coke is of a silvery color, lighter and smaller than that of the intermittent system of verticals.

A sample of tar taken from the separator was very thin, and of light gravity. This sample contained less than 4% free carbon, but had over 6% of naphthalene, which would seem contradictory. The low free carbon would indicate low heats, and the naphthalene rather high heats. The low carbon, however, is probably due to the lampblack being filtered out through the green coal. There is scarcely any back pressure in the bottom of the retort.

The illuminating power of the gas is not as good as that of horizontals using the same coal, but the candle feet is approximately the same. They have no hydraulic main, and claim no trouble with take-off pipes.

The retort is 25 ft. long, 21x29 in. on the bottom, and 9x23 in. on top. Each retort will make 36,000 cu. ft. in 24 hrs., which means that it carbonizes the equivalent of 2½ times its volume of coal in that time.

With a setting 10 ft. wide and 22 ft. long, such as is being built at the Nine Elms station, London, they would get almost 150 M per bench of 4s.

The cut gives a good idea of the construction of this Nine Elms setting. The producer is an external one and will hold two tons of coke. The combustion takes place at the top of the bench, which prevents the green coal from sticking.

The principal features of the Woodall-Duckham system as now running, appear to be:

1. The retorts are not opened either for charging or discharging, and hence the usual dust and smoke of retort houses is done away with.

2. The retorts are not subjected to sudden changes in temperature, and should, therefore, have a long life.

3. The hottest part of the bench is on the top, and if that should be burned out, it can be replaced without disturbing the greater part of the setting below.

4. Large capacity per foot ground area and per foot of retort.

5. Thin tar.

6. High yields.

7. Little pressure at the bottom of retort.

Lyons and Marsailles: At the same time Messrs. Woodall and Duckham were working on their system, two engineers in France, Messrs. Verdier and Teulon, were experimenting with a similar system in Lyons. M. Verdier stated that his plants had shown some promise, but his experiments were interrupted. His principal trouble was to get the green coal in the top of the retort to flow well. The coke in the lower portion never stuck. There was no trouble with either charging or discharging mechanism. These consisted of cocks, similar to those used by Messrs. Woodall and Duckham. It is quite probable that had Mr. Verdier had sufficient heat in the top of his retorts the green coal would not have stuck.

Settle-Padfield: Another system, at one time promising, but at present not in use, was the Settle-Padfield. There are some lessons to be learned from the experience of a plant of this system at Cleethorpes. The plant consisted of a bench of six vertical retorts, the bottom of which was curved until the mouthpiece opened on a vertical plane. The coal was charged with a plunger feed.

After working the apparatus in various ways, it was found impracticable to fully carbonize coal when charged into the retort in pinches, unless left in the retort for several hours after

the retort was full. Plunger feeding was finally done away with, and the retort charged directly with the chute.

What probably finally made them give up was the old trouble of coke sticking. This they were never able to overcome.

Other experiments have been made with the continuous system, among them one by G. R. Love. His experiment was on the same lines as the Settle-Padfield, with practically the same results. Mr. Love has since designed a 45° inclined setting, which at first he started to charge continuously, but has since made it intermittent.

Intermittent Systems: The intermittent systems of vertical retorts as well as chamber ovens, have so far been developed to a greater extent than the continuous systems. It is the general opinion of Continental engineers who have within the past three or four years installed inclines or horizontals, that these are out of date, and that new apparatus will certainly be either a vertical or inclined oven system.

There are a number of intermittent systems, both of verticals and inclined ovens, which have been built or are being built, but only the Dessau system of vertical retorts and the Munich chamber ovens have been perfected sufficiently to be put on the market. Of the Dessau system, there are now operating or under construction over 2000 retorts. These, with the exception of those in Dessau, have all been built or contracted for within the past three years.

Dr. Bueb and his associates have certainly developed a practical and successful setting.

Four plants of the Dessau system were visited. They were chosen as being typical of the two styles of setting (i. e., those with four-meter and five-meter retorts).

These plants were Zurich, Mariendorf, Oberspree and Cologne.

The principal object in most of the plants on the Continent is to get as much gas per ton of coal, of a fair calorific value, as they can, irrespective of the candle power. This is made possible because everybody uses Welsbach mantles.

In all of these vertical plants they inject steam into the re-

torts toward the close of the charge. The time of steaming varied from 1 to 3 hours. This steaming increases the yield considerably, and also decreases the candle power. The calorific value, however, is not decreased in proportion to the candle power. In fact, the gas made in these verticals has a high calorific value for its illuminating power. This can probably be explained by the fact that the gas does not come in contact with the hot sides of the retort, and must, therefore, depend for its illuminating power on its fixed illuminants, and methane, and these have high heating values per candle compared to benzol. It requires something like 1200° F. to make benzol, and if the gas goes up the center of the charge there is no way of it reaching that temperature. Dr. Bueb insists that the retorts must be full. There seems a decided possibility, however, that the illuminating value would be increased if the gas were exposed to some fixing heat before leaving the retort; not enough to make much lampblack, but enough to break some of the tarry vapors into benzol and utilize all of the paraffin oils in the coal. Provision was made for this in the design of a vertical setting for Manchester, N. H., which will hereafter be described.

Most of the engineers having the opportunity of comparing verticals with horizontals, or inclines, admit that the candle powers yielded by the latter are greater than those yielded by verticals, and in some cases considerably greater. However, the yields of the verticals are larger, and the candle feet of the two about the same. If, however, the yield were multiplied by the calories, the balance would probably be in favor of the verticals.

Water gas making, by putting steam in the retorts, adds slightly to the capacity of the setting, but is an uneconomical way of making water gas, and in this country would probably not be practiced, inasmuch as the process increases the bench fuel and only slightly increases the capacity. Some fairly good bench fuel results have been obtained, but as a rule they were higher by 2 or 3% of coal carbonized, than the bench fuel of horizontal or inclined settings in the same plant.

Most of you are familiar with the arrangement of the Dessau setting, but it may be well to give a brief description of it.

The sketch shown gives a general idea of the arrangement. The recuperators are of the horizontal type with one air passage placed between two waste gas flues. The furnace extends to the top of the setting and holds a large quantity of coke. The producer gas take-off is only a few feet above the grate, but being always covered, the effective fuel bed is necessarily always about the same height. Each retort has a separate horizontal take-off pipe leading to the hydraulic main. The latter is placed outside the setting.

The bottom mechanism and doors are well thought out. Each door is operated by a rack moved by the operator from the ground by means of a hand winch. Geared to the rack is a pinion separated from the door shaft by a dog clutch, which, by levers from below, can be thrown in at will. There is a rack for each shaft, and any door can be thrown in and operated by this means. The doors are counter-weighted so that they will stay closed until the operator has a chance to secure them with a ring catch. They are then tightened with two eccentrics attached to the cotter bars. To do this the operator uses a lever, and to operate this lever he must stand beneath the retorts.

With the exception of the Mariendorf and Oberspree settings the retorts are all 4 meters (13 ft.) long.

ZURICH: Through the courtesy of Herr Weis, a thorough inspection was made of the operation of his vertical plant at Zurich. Although capable of making 1500 M cu. ft. a day, it had only two men on each shift for filling and discharging the retorts. It also had a hydraulic main man, two clinkering men and a man to look after conveyors, etc. One can readily see that the labor costs must be very low. The retorts were charged 10½ hours, and steam injected into the bottom of retorts 1½ hours before the charge was dropped. We saw the retorts, holding about ½ a ton, charged and discharged at the rate of about one a minute. Screened coal only was being used, and most of the charges dropped out well. A few

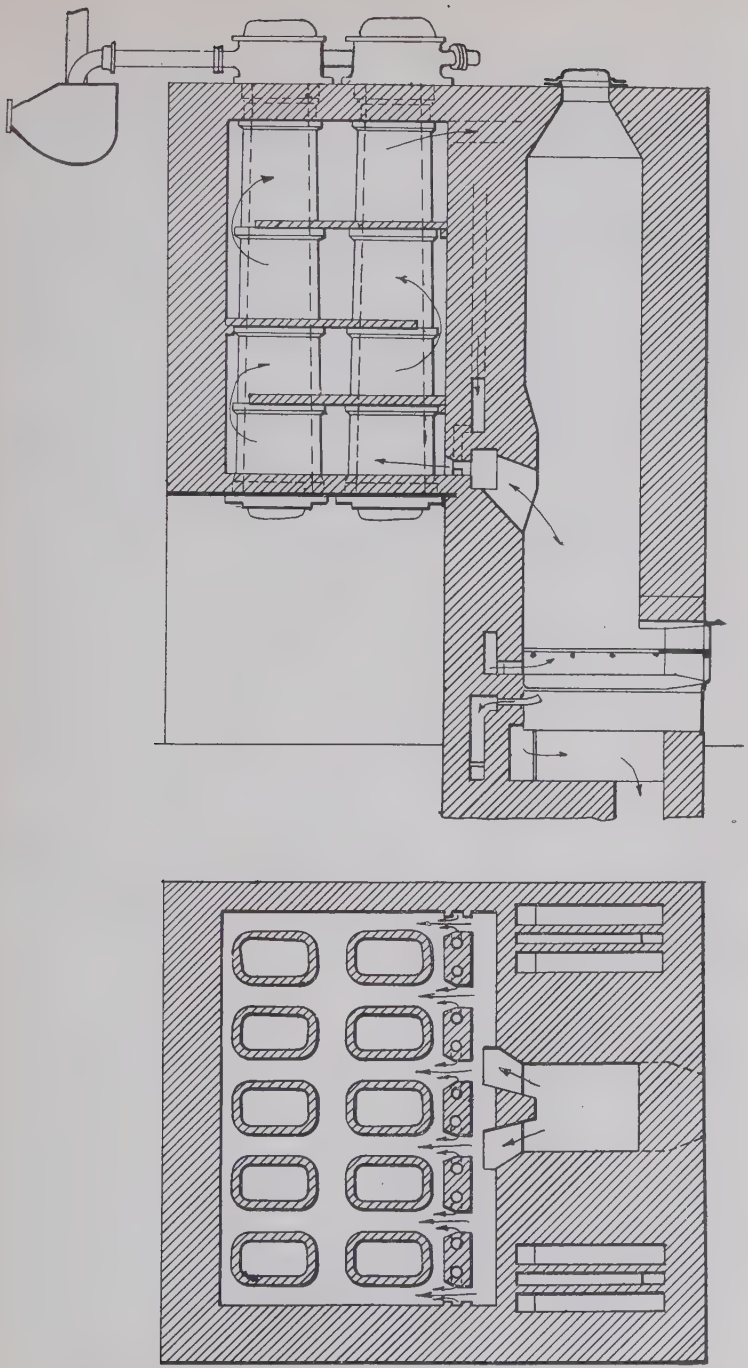

FIG. III.—PLAN AND ELEVATION OF THE DESSAU SETTING.

stuck, however, due to excessive carbon on the walls of the retort. The extreme top of the charge at times also hung; this, however, is easily poked down. The cause for this is hard to explain, unless there is some tar condensed on the top mouthpiece, and it drips on the top of the coal, causing it to cake. The retorts had been running over eight months when we saw them, and were still all in splendid condition.

COLOGNE: The largest installation of verticals built so far is the one at Cologne. It has two houses containing 120 retorts, each retort 4 meters long. The houses were originally used for horizontals, but they were torn out and two complete vertical plants with conveyors, etc., were installed. At this plant they use run-of-mine coal. Two men in each house do the charging and discharging, scurfing, etc.

For each 24-hour day the labor required to operate both retort houses is 21 men, or 7 men for each 8-hour shift. These men are divided up as follows:

Four men for charging and discharging,
Two men for cleaning fires,
One man for standpipes, hydraulic mains, etc.—seven men in all.

For a plant making over 3½ million feet a day, this labor is very small.

The engineer of the Cologne plant told us that his labor costs in comparison with inclines and hand-charged horizontals were in the proportions of,

One for verticals,
Three for inclines,
Eight for horizontals.

These settings had been running for fourteen months, and all of the retorts are still in good condition.

MARIENDORF: At Mariendorf the retorts are 5 meters long. Each bench contains 12 retorts instead of 10, which latter is usual with 4-meter retorts. The engineer of this plant as strongly favors the longer retorts as the other engineers favor the shorter ones.

There were many interesting things to see at this plant.

One of these was a recently designed long section retort, or vertical chamber. These chambers are made of small brick interlocked in a way similar to the shale retorts. Each retort held three times as much coal as their standard 5-meter retort, and there were just half as many to a bench. They had operated a bench of chamber retorts for three months. The engineer said that up to that time the results were not as encouraging as they had hoped for, due to high bench fuel. If the side walls of this retort will stand it may be adopted in the future in preference to the smaller retorts, but the writer can see no particular advantage besides increasing the capacity of the bench, unless it reduces the fuel consumption.

The foundations and building for a large installation has been built, and it will be interesting to see what shape of retort they will adopt in their new settings.

The lower part of some of their smaller retorts has been rebuilt with small brick, and thus repaired, the retorts have operated successfully. This system of construction is on trial at other German works—it permits easy repair of burned-out lower parts of retorts.

A very ingenious system for reducing the pressure in the bottom of the retorts has been adopted at this place. The principle is to screen all of the coal as it enters the bin on top of the setting. The fine coal is conveyed to one side of the bin, which extends over the retorts, and the coarse to the other side. The two sizes are in turn run into the charging hopper, which is also divided. When the valve of the hopper is opened the coal falls in two streams, the lumps on one side and the fine on the other. The gas undoubtedly takes the course through the lumps and the pressure is thus reduced.

Oberspree: Oberspree has four vertical benches of the same dimensions as those at Mariendorf.

This plant has a capacity of about 700 M. cu. ft. per day, and is operated by one man to each shift. This man first opens the lids above, then discharges the coke from the bottom, and then goes above again to charge and close the top lids. At the time of our visit only two benches were under fire, and the

one man in charge was idle most of the time. They charge every 12 hours. They have a DeBrouwer conveyor for taking the coke away, and a bucket elevator with a screen on top to divide the lumps from the fine coal. The coal is distributed along the storage bin by means of dump cars.

The benches have been running for almost two years, and are still in good condition. With exception of occasional sticking of the coke in the very top of the retort, most of the charges come out clean. One or two, however, as in Zurich, stuck, and had to be poked from both top and bottom, due to excessive carbon on the sides. The retorts have to be decarbonized every three to six weeks. In that time the growth of carbon is not as large as in horizontals, but a comparatively small quantity will cause trouble in the discharge of coke.

The process of decarbonization is very simple. The lower retort lids are slightly opened and a piece of sheet metal, with only a few small holes in it, is put over the open top mouthpiece. These holes are put in to regulate the amount of air passing through the retort to prevent it from getting too hot.

All of the plants around Berlin use a water-cooled hold-up bar for clinkering. This is a very simple device, consisting of a piece of extra heavy pipe closed and sharpened at one end. In the other end is inserted, the entire length of the bar, a smaller pipe, the outside end of which has a small funnel looking upward. This combination is pushed into the fire, and the funnel is placed below a small water cock which feeds into the funnel and keeps the bar cool.

MANCHESTER, N. H.: About two years ago it became necessary to make an extension of the coal gas plant at Manchester, N. H. Vertical retorts, having shown considerable promise in trials abroad, it was decided to install them. In an effort to avoid some troubles which had been experienced with existing designs, and to still further improve operation, some entirely new features were embodied in this setting.

The system of intermittent charging was adopted because it seemed satisfactory and simpler in construction and operation. There were a number of things that seemed important

to the success of a setting in this country. It should have large capacity in proportion to ground area; it should make a gas of good candle power; it should be as near proof against destruction by overheating as possible; the retorts should be heated evenly, and the mechanism should be easy to operate.

Reports had come from abroad that some of the plants had experienced trouble from the melting of the lower section of their retorts. Knowing that they had access to the most refractory clays, we inferred that care must be taken in the distribution of heat to prevent softening of the lower part of the retort—as retorts are heavy and their weight must be borne by their hottest portion.

The Dessau setting, in use at that time, had producer gas and secondary air meeting at the entrance to the retort chamber, in such a way as to be pretty sure to have some of the flame impinge on the retort. To avoid this, and to give the gases a good chance to mix, a combustion chamber was placed between the furnace and retorts. This combustion chamber also acted as a distributer of the heated gases around the retorts. It appeared probable that the retort chamber in the Dessau setting was not located in the best position relative to the furnace, to utilize the ground space to the best advantage; the furnace should be on the narrow side of the chamber, instead of the wide side, and this, furthermore, insures an even distribution of the furnace gases around the retorts. Therefore, the retort chamber was made narrow and the gases introduced at the narrow end. The furnace was extended outside the setting, so as to permit barring down of the clinker from the top, if necessary. An asbestos packed charging door was used, and the ash-pan chamber was separated from the chamber above, so that primary air could not by-pass the grate and go up the front of the fire.

The recuperators were placed above the generator and combustion chamber, and the introduction of the secondary air so arranged that part of it could be admitted half way up the retorts.

Each of the two benches, only one of which was operated,

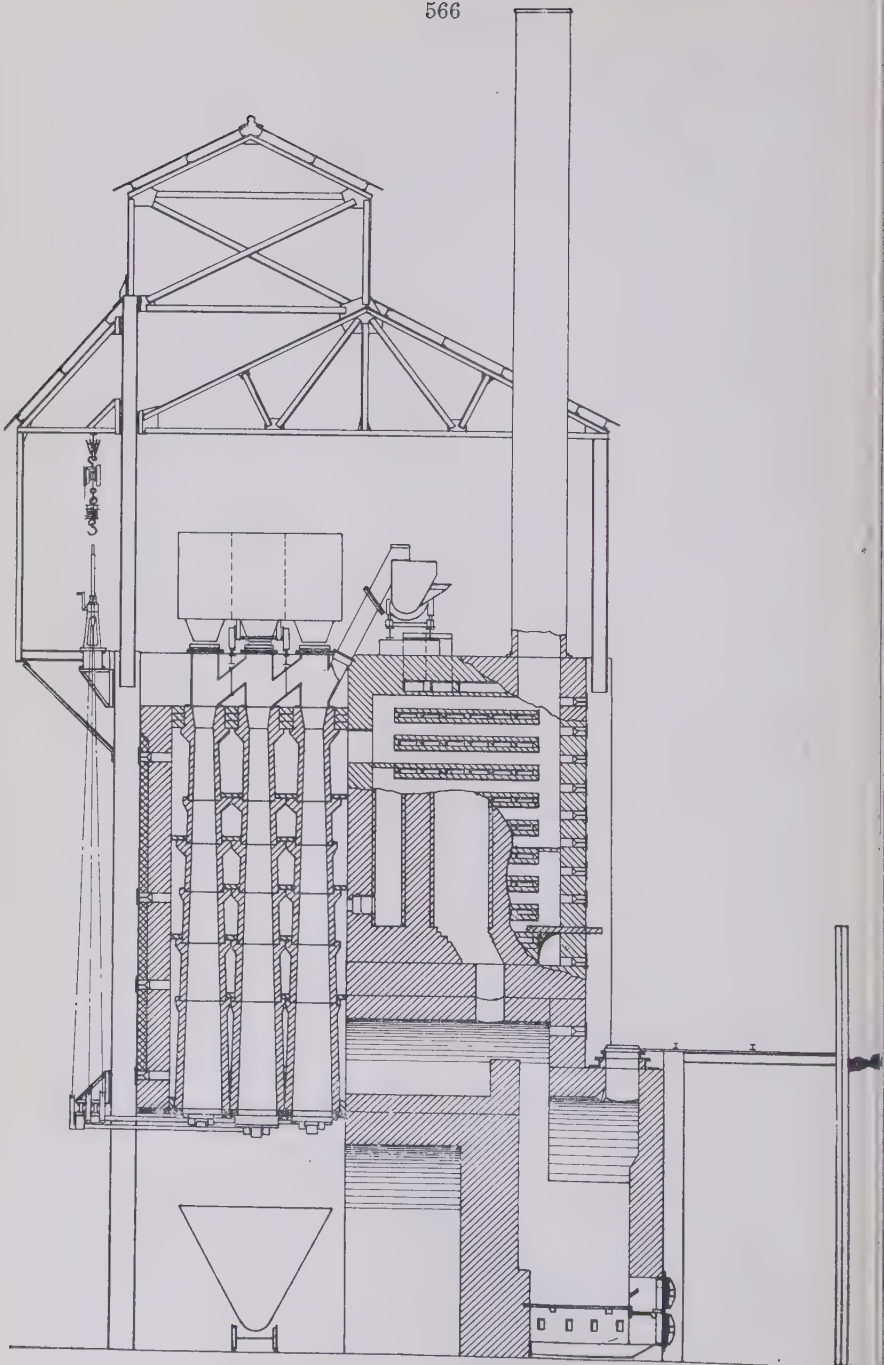

FIG. IV.—MANCHESTER N. H. SETTING.

consisted of nine retorts 18 ft. 6 in. long, with elliptical sections 12x18 in. on the bottom and 8x14 in. on the top. It was thought that a small retort would carbonize more coal for its volume in 24 hours than a large one, due to the small distance heat had to travel through the coke, a poor conductor, to the center of the charge. However true this may be, the combination of a small retort with slight taper and rough inside surface, was not a success, inasmuch as the coke did not drop out as it should. At first this coke sticking was aggravated by an enamel on the inner surface of the retorts. This became sticky when hot, but in a short time enough coke was absorbed by it to make it lose its adhesive qualities; it, however, left the surface quite rough. The joints in the retorts did not fit as well as they might, which helped to hold up the coke.

Run-of-mine West Virginia coal was used. A charge of about 850 lbs. was burned off in 6 hours. but could not be discharged at all until it had been left in the retort 8 hours; even then it took more or less poking from both top and bottom to make it fall. However, when left in the retort for 12 hours the charge would almost invariably drop without poking.

Some experiments were then made with screened coal, and it was found that with this the retorts would readily discharge. The experiments made seemed to prove the following as to the behavior of coal in these retorts:

1. That a coal having the most voids, or open spaces, would shrink the most. Such a coal is one of even sized lumps. A mixture of large and small lumps is little better than a mixture of slack and lump. It is better to mix the lumps and slack thoroughly than to permit slack and lumps each by itself to be alternately charged.

2. That the maximum shrinkage of coke does not take place until the coke has remained some time in the retorts after the charge is burned off.

3. That a moderate heat in the retorts is better than either very high or low heats. When too hot, the coke gets sticky, and when too cool it does not shrink much.

A space of about 3 feet was left over the coal in the retorts

to allow for fixing the gas. Unfortunately, the plant was not isolated so that results could be obtained separately from a stack of horizontals, but the average candle feet of the combined plants, the verticals making about half the gas, did not deteriorate during the three months the vertical plant was run.

The horizontal retorts were shut down for three days, the only period permissable, but several accidental conditions made this test of the verticals of little value. The candle power results during that time, however, were encouraging.

An interesting feature of the working of the verticals was that in three months' operation with all kinds of heats, there was no accumulation of carbon in the retorts.

Inasmuch as the retorts were not satisfactory and their faults were evident, it was decided to make an experiment to find out what was the best size and taper to suit the coals in this country. Smooth operation must be possible with coal of any size; to be limited to the use of screened coal is, practically, not permissible. The small retorts have been removed, and five retorts of four different sections and tapers are to be tried. These retorts will hold from 1000 lbs. to 2200 lbs. when filled to within 3 ft. of the top. The lower mouthpiece of the smallest is 16x22 in., and the largest 22x34 in.

The capacity of a setting, such as built for Manchester, will be more than twice that of machine-stoked horizontals for the same retort-house ground area. The cost of building, settings, conveyors, etc., will be about the same for a given daily capacity for verticals as for machine-stoked horizontals.

The saving, therefore, with the verticals would be a great reduction in labor and ground space, and as with other vertical systems, the by-products should be more valuable.

Derval Setting: At Etaple, France, M. Derval has erected verticals consisting of two benches of four retorts each. These benches are so constructed that they can be made into 8s by moving the back wall. This will be done when increased capacity is required.

The drawing shows the complete setting of retorts. The arrangement of the retort chamber is very similar to all other

systems of verticals, the retorts being suspended and the furnace gases baffled.

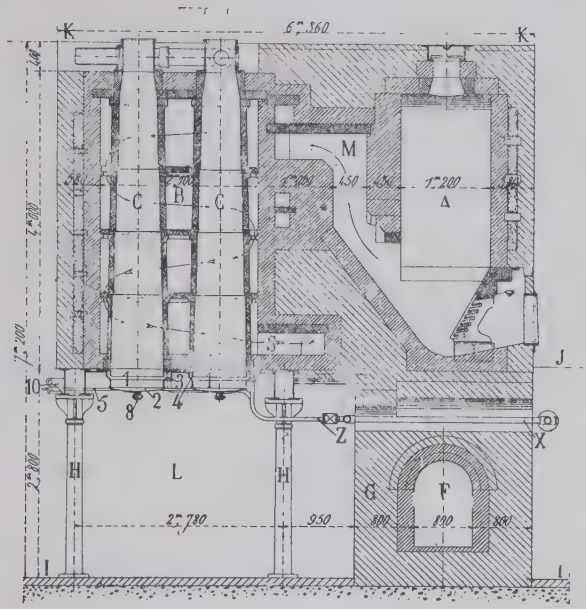

FIG. V.—DERVAL SETTING.

The hot furnace gases enter at the top and go downward. This is not like other intermittent verticals. For the best results heat should be applied to the retort in proportion to its cross section area. In this setting the maximum heat is applied at the smallest part of the retort, hence that part will have given off the gas long before the lower part, and the gas coming off from the lower part then will have to pass through hot coke.

The engineer of the Etaple works said that he had been having trouble with coke sticking in the retorts. He used run-of-mine coal, which evidently did not shrink much. The plant was a very small one, and had no exhauster. The pressure on top of the retort was 7 in. and at the bottom 18 in. This seems a great deal, but one of the peculiarities of verticals is that they seem to stand high internal pressure without leaking, the only difficulty being to keep the bottom doors tight.

Inclined Chamber Ovens.

Munich Ovens: The principal competitor of the Dessau system abroad is the Munich chamber oven. Many German engineers prefer them to vertical retorts. It is a simple and well designed setting with many good features. The plant at Munich is only a trial one, and no provision is made for coke handling—such provision is, however, being made in their new installations. Each bench is 12 ft. 4 in. wide between centers, and consists of three chambers, each 20 in. wide, 6 ft. high, and 13 ft. 9 in. long. The chambers are inclined at an angle of about 35°.

There are two doors on the upper end of the chamber, each about 20 in. square. The upper one is used for charging, while the lower one is used for admitting the pusher for starting the coke. The lower door is over 6 ft. long and is hinged on the top; the combination of a sharp edge and several cotter bars make it very tight and efficient. The take-off pipe rises from the frame of the upper door. There was not a sign of a leak in any of the doors, despite the fact that they ran from ¾ in. to 1 in. pressure on the chambers. The coke was started by means of a small pusher operated by hand. After starting it slides in one mass to a pit in front of the lower door.

Two men on the charging end and one on the discharging end do the work, and labor should be very low, as they only charge every 24 hours. The ovens had been working for two years with only slight repairs, and seemed to be in good shape. There is one producer for each bench, and this is outside. One feature of these chambers is that although carbon forms on the sides in about the same time as in verticals, it can be removed in half an hour—it comes off in large sheets. The chambers are charged in half a minute direct from the coal bins.

There is a plant of these Munich ovens in Hamburg consisting of ten benches of three chambers each. These chambers are 24.5 ft. long, are 7 ft. 4 in. high between top and bottom. The door, however, is over 9 ft. long. The outside chambers are 20 in. wide and the inside 24 in. The charge per bench is nearly 18 tons. The chambers are at an angle of 35°.

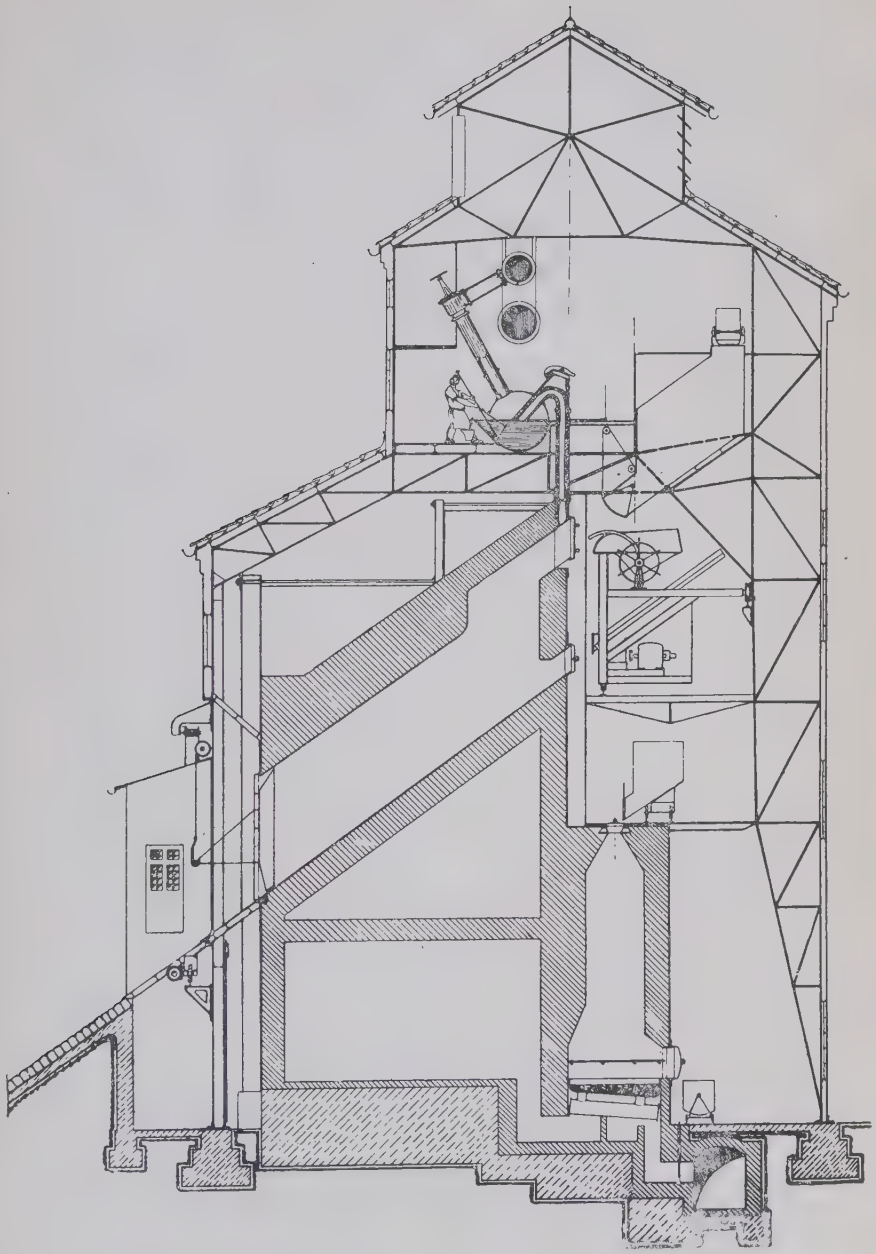

FIG. VI.—MUNICH CHAMBER SETTING.

The coke slides into a water-jacketed quenching chamber arranged with a chimney to lead off the steam. From this it is discharged into a DeBrouwer conveyor. The ovens being charged every 24 hours, only a day shift of four men is required for charging and discharging. At night one man only, to watch the furnaces, is required.

The charging and discharging is done at the rate of 60 tons of coal carbonized per man.

The inclined oven has the advantage over the horizontal oven, of operating with the chamber filled with coal, which

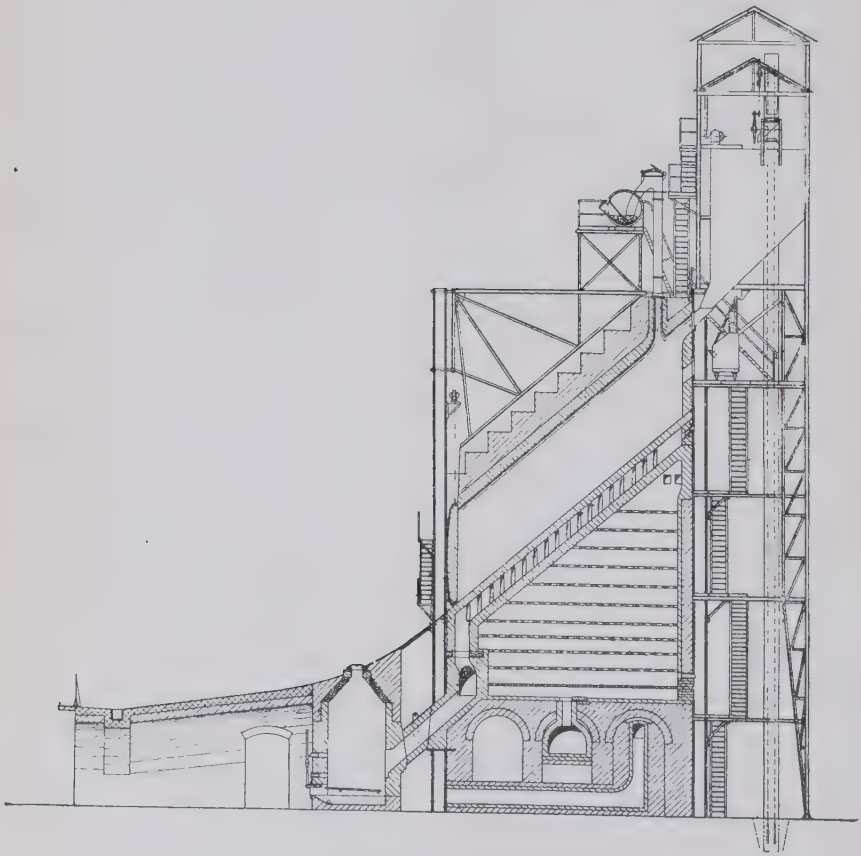

FIG. VII.—KOPPER INCLINED COKE OVEN.

prevents overheating of the gas by contact with the hot oven roof. They are also purposely operated under pressure, which instead of causing a loss in gas, fills up the pores of the bricks with carbon—only tight doors permit this to be done, otherwise they would lose too much by leakage through them.

There will undoubtedly be a movement among the coke oven manufacturers and operators of horizontal by-product ovens in this country, to use outside producers to heat their benches and save all the gas for sale. To do this, they must first so improve their oven doors as to stand pressure, and also moderate the heat above the surface of the coal so that the gas will not be overheated and decomposed.

Kopper Oven: One of the principal oven manufacturers abroad, Herr Kopper, has erected his form of inclined oven at Buchum, Germany, and is now building one in Vienna. The plant at Buchum consists of two benches—one of three and the other of four ovens—with an outside producer for each bench placed at the lower end of the oven.

The construction was more massive than anything the writer has seen in the way of either ovens or other coal-gas apparatus. Each retort was 32 ft. long, 18 in. wide and 8 ft. high. The whole structure was 90 ft. high to the top of the coal bin. Each charge was 8 tons, and was burned in 24 hours.

One of the principal claims of the makers is their system of distribution and regulation of heats. The furnace gases go from the bottom of the retort in vertical ducts with damper blocks at the top of each duct. The heat is distributed by this means, and should be an effective way.

This plant has been in operation only a very brief time, and no statement of operating results can be given.

Tapered Inclined Retort.

At the Brussels municipal plant trial is being made of an inclined retort enlarging toward the lower end. This single retort is set in the middle of a bench of 9's and has been in operation a year. It is charged in the usual way, but the coal is thrown in with sufficient velocity to practically fill the retort. The retort is about 15 ft. long and has 5-inch taper, and is set

at the same angle as the others, about 32°. The managers of the Brussels plant think so much of it that they are installing seventy-two new retorts of this pattern.

The charge is burned off in twelve hours. We saw the retort discharged, and the coke came out in a mass without being poked. Should these tapered inclines continue to show promise they may not only be used in the present incline settings, but be an active competitor of both the ovens and verticals.

Operating Results.

Unless the same coal is used in tests of different systems, comparisons of results are of little value. It is generally conceded that at present the yields (cu. ft. per lb. coal) of the new systems are higher than those of horizontals or inclines, but the latter give better candle powers, enough so to offset the higher yields when illuminating value is required.

The following tables show some of the results obtained with the various systems described. The writer was unable to find tests made with the Woodall-Duckham system with the same coal as either the Dessau or Munich systems. He is, therefore, giving some tests made as described by Mr. Woodall in his paper previously referred to. It must be borne in mind that most of the English and Continental gas coals are not as rich in volatile constituents as the best American gas coals, and this may account for the low candle feet values. The average coals abroad have about 30% volatile, while our standard gas coals have from 33 to 36%.

Where made	Bourne Valley	Nine Elms	Poole
Yield per lb. coal . . .	5.88	5.54	6.25
Candle power (Carpenter burner) .	14.1	15.8	14.3
Candle feet (Est'd flat flame) .	8.1	9.8	8.3
Calorific value (Est'd flat flame) .	47.5	54.5	52.
Calorific value . . .	....	597	551

The flat flame value for candle powers is estimated from curves given by the Bureau of Information of the American Gas Institute in answer to Question No. 23. These show that

there is a difference of about 6 C.P. between the 8-foot flat tip and the No. 2 Carpenter burner, when the candle power of the latter is between the limits of 11 and 17. The above table shows very high yields per pound, but of very poor candle power gas, suggesting insufficient breaking up of the hydrocarbons. There have been results published in the various gas journals abroad, by which we can readily compare the results with the Dessau system and Munich chambers. These results are as follows:

Test	I	II	III	IV
Place	Zurich verticals no steam	Munich chambers no steam	Zurich verticals no steam	Munich horizontals
Date	May, 1908,	Feb. 1907	May, 1908	
Yield per lb. of coal:				
Cu. ft. of gas . . .	5.43	5.13	6.17	4.84
Candle power, flat flame	9.11	9.67	6.23	11.00
Candle feet . . .	48.9	49.5	38.5	53.3
B. T. U. per cu. ft. .	591	617	561	623
Per cent coke made .	69.3	67.1	66.7	67.8
Bench fuel—% of coal .	13.9	15.3	15.0	.....

The above tests were all made by Dr. Bunte, of Karlsruhe, with the exception of the horizontals, Saar coal being used in each. The results for horizontals, in which Saar coal was also used, are given by Herr Ries.

Other comparative tests have been made by Prof. Drehschmidt, of Berlin (see Journal fur Gasbeleuchtung, Sept. 5, 1908) with the following results. These tests were made with various mixtures of German and English coals; the same mixture was, however, used in both tests of each pair I, II, and III.

Although yield of individual residuals differs in general there seems little net total difference between these various results. Prof. Drehschmidt says that although the cost of labor seems to be less in the Munich chambers, they have to give more attention to the hydraulic mains and standpipes.

Test	I		II		III		Average I-II-III	
	Vertical	Oven	Vertical	Oven	Vertical	Oven	Vertical	Oven
Y'ld per lb.	5.27	5.39	5.19	5.46	5.18	5.38	5.21	5.41
C'dle pow'r	10.87		11.8		11.05		11.23	
B. T. U. per cu. ft.	573	554	574	552	571	559	573	555
CO_2 . .	1.90	3.37	2.24	2.75	2.11	2.62	2.10	2.91
Sp. Gr. .	.38	.44	.40	.478	.40	.459	.39	.46
Am'nia lbs.	5.86	5.60	6.44	5.30	5.62	5.72	5.97	5.54
Tar per cent	5.00	4.57	6.23	4.24	6.66	4.57	5.96	4.46
Breeze, % .	4.89	3.07	4.85	3.86	4.63	3.14	4.79	3.36
Coke, % .	66.38	66.21	64.88	66.89	65.50	68.35	65.59	67.15
Total coke	71.27	69.28	69.73	70.75	70.13	71.49	70.36	70.51

It may be interesting to compare some analyses of tar made from different English coals. The writer is unable to find an analysis of tar from the Munich ovens.

Dry Tar	Horizontal % by weight	Woodall Duckham Poole % by weight	Dessau verticals % by weight	Oberspree verticals % by weight
Light oils up to 170° C.	1.1	3.7	1.7	2.3
Middle oils 170° to 270° C.	13.1	18.3	21.9	16.5
Heavy oils 270° to 350° C.	13.2	17.8	21.6	20.8
Pitch above 350° . .	72.1	59.4	54.3	60.0
Naphthalene . . .	9.0	6.2	3.6	3.6
Free carbon . . .	28.7	3.7	0.4	0.6
Specific gravity . .	1.25	1.11	1.10	1.13

Summary.

As to which of the systems described will eventually prove the best can hardly be decided at this time.

The Dessau system has been tried to a greater extent than any of the rest. It has proven itself a success, and superior to any system previously devised. It remains to be seen, however, whether it is, or is not, superior to the other recently devised systems.

The small Munich chamber ovens seem to yield as good total results, in combined gas and residuals, as the Dessau verticals and in other respects may possess some superiorities. This may also be true of the recently designed greatly enlarged form, but careful, practical trial is necessary to demonstrate its qualities.

The new Woodall-Duckham system has been tried on only a single retort, and although promising, still has to be operated in a large setting and for some time before it can with certainty claim superiority over the others. The plant at Nine Elms, about to be started, will give us a line on its possibilities.

The Derval system, as operated at Etaple, has had comparatively brief trial to date. A trouble to be overcome is the sticking of coke.

The sticking of coke is a trouble to be overcome at the Manchester, N. H., plant. It is expected that this trouble will be corrected by the greater taper of the new retorts which are to be installed.

It will be interesting to hereafter learn the results obtained from the Glover verticals in England, the Brussels tapered inclines, the Love 45° inclines in England, and the Kopper inclined ovens in Germany.

Whatever may be the system or systems finally proving most successful, the gas fraternity is under obligations to the investigators in this field, notably Dr. Bueb, Herr Ries and Messrs. Woodall and Duckham.

The President: If there are any remarks or questions in connection with this paper we will take them up later, as we will take up a subject now which is closely related. We will hear a paper from Mr. Fulweiler.

Mr. Fulweiler:

PHYSICAL THEORY OF COAL CARBONIZATION.

Historical Development.

Curiously enough, the first twenty years of the development of the coal gas industry saw, with the exception of the principles of recuperation and the return of waste products, the suggestion and trial of practically everything that we have today.

Horizontal, inclined, vertical and revolving retorts, and continuous carbonization and purification and mechanical stoking were all tried out and pretty fairly discussed, so that it has remained for later years to perfect and develop these visionary and paper processes, and make possible the apparent impossibilities of the earlier efforts. All the developments which have taken place in later years have come very slowly and have been thoroughly thrashed out in our literature, some of them resulting in violent controversies. These questions or developments have succeeded one another in about the following order:

Replacement of the iron retort with clay retorts.

Removing the back pressure on the retorts by means of an exhauster.

Development of gaseous firing.

Development of recuperation.

Attempted use of tar for gas making.

The use of dry or sealed dip-pipes.

---

*Throughout the paper all the units are those in general use in the United States.

Temperatures in Fahrenheit degrees; heating value in B.T.U.; tons of 2000 lbs.; candle-power, unless specified, reduced to flat flame at 5 ft. per hour; gallons, 231 cu. in. Subscript figures in all cases allude to the corresponding references in the Appendix.

Mechanical stoking and mechanical handling of materials.

The inclined retort.

Mixing blue water gas in the retorts, so-called "Auto-enrichment."

Coke ovens.

Vertical retorts.

Methods of Supplying Heat for Carbonization.

The carbonization or distillation of coal for the production of gas requires the application of heat (although we shall presently show that the reaction per se liberates a small quantity of heat), so that the simplest means of carrying out this process is to put the coal in a pot over a fire. The earliest experimenters did this, and we are still doing the same thing, although we have considerably improved both the pot and the fire. That we are using this method today is not for lack of suggestions and inventions of other means of accomplishing this end.

The methods other than those which require a heat transfer through the containing vessel may be grouped in three general heads.

a. The use of an internally heated vessel.

b. The use of a body of heated coke.

c. The use of hot gas as a heat carrier.

a. One of the earliest suggestions under this first heading was that of S. Cornforth and F. and W. H. Ratcliffe, of England, who in 1873 proposed to heat a retort with an internal fire by means of a properly regulated jet of steam and air. Details are not given. Two years later J. I. Bennett proposed to build a fire in a retort provided with passages to secure a draft and to circulate the hot products. When a proper temperature was secured the fire was raked out and the retort charged. Nothing came of this patent either.

In 1884 Henry Aitken patented a process similar to Cornforth and Ratcliffe's, where he secures combustion of a portion of the gas in the top of a bee-hive oven, thus coking the charge and drawing off the remaining illuminating gas through ducts in the floor.

It was not until 1898 that W. Young, W. R. Herring and A. Bell patented a process that was really tried on a practical scale. They proposed a rotating retort heavily lined with fire tile; this had gas discharge pipes in the trunnions and was provided with a charging hole on the side. A charge of hot coke was put in and an air blast turned on after the manner of the converter, the retort being rotated; in this way the interior lining and contents were brought to a very high even temperature. The retort was stopped and a charge of coal quickly introduced, the retort being rotated until the coal had been coked by the stored heat. This blowing and charging continued intermittently, dumping out the coke as the retort became too full. Unfortunately, no definite figures were ever given out, although the gas was said to be of good quality. Except for the extent of superheating surface to which the gas was exposed, there is no real reason why this method should not have been successful.

b. Under the second heading, processes making use of a bed of incandescent coke came in with the advent of the water gas process, and a great many schemes have been proposed to utilize the heat stored in a fuel bed and the surrounding brick-work after the "blow."

The idea has been to blow up the bed to a high temperature, then charge in a thin layer of coal and withdraw the gas either through the hot coke bed by means of an exhauster, and thus gasify the tar and secure a non-illuminating gas, or else make a small amount of water or producer gas of very high temperature to carry off the coal gas generated.

The principal difficulties have been, first, the length of time required to coke the coal (though the use of powdered fuel

has been advocated to obviate this), and second, the fact that the green coal would solidify and cake the whole upper portion of the fuel bed together so that it requires frequent breaking up with a bar, a dangerous proceeding with the amount of gas that generally remained in the coal.

In their usual form these suggestions provide for a chamber, the lower portion of which is arranged as a producer and provided with air and steam inlets, while the upper portion is arranged to receive the raw coal. P. Cooper, in 1883, patented such a device in England.

In 1885, F. Egner suggested a somewhat similar idea, but he provides for making a rich semi-water gas from the coke in the lower chamber, and burning this with a secondary supply of air in the middle of the chamber at the base of the raw coal, thus securing a maximum temperature of the gases.

In 1889, B. Loomis also patented a similar process.

In 1890, R. Mannesman brought out an ingenious method of first blowing up a bed of coal with air blast until the lower portion was coked and the whole mass heated up, then circulating a small stream of water gas made by injecting steam. In this way only a portion of the gas made would be decomposed by passing through the hot coke.

In 1899, W. B. Johnson suggests the use of powdered coal in the fuel bed of a water gas generator.

In 1907, H. Wurts patented a combination process of first heating the coal externally to 750 degrees F., the starting point of the distillation, and then rapidly circulating heated products of combustion over the coal, in this way avoiding decomposing the hydrocarbons formed.

Most of these methods, of course, fail by decomposing the illuminating hydrocarbons.

c. Coming now to those processes which employ an externally heated gas, we find an enormous number of patents. Practically all depend on the use of superheated steam, as it has the advantage of a high specific heat, neutral action on the hydrocarbons, and ease of removal from the gas.

One of the earliest patents was in England in 1856, to

Wm. C. Holmes, for the use of superheated steam, while in 1876 the combined use of retorts connected to water gas generators was patented by J. H. Johnson.

In the use of superheated steam, recent work has been done by Strache and Blass in Germany in 1895. Elworthy and Lane in England in 1898 patented quite a complicated system of regenerators for perfecting the heat economy. Blass in 1898 charges the coal directly on top of the fire.

Schell and Primrose, 1901, use this idea combined with regenerators for recovering the heat from the waste gases, while in 1905 Blass, who has probably been doing more work on this line, abandons the attempt to externally heat the steam, and connects the retort to his water gas generator directly.

It has been pretty definitely proven now that with our present knowledge and means of heating steam to high temperatures and keeping it hot, we cannot hope to approach the present method of direct heat transfer through retort walls in efficiency.

The type of apparatus in which the coal is distilled by the external heat from the waste products of the "blow," and internally by the hot water gas from the "run," has been extensively experimented with in the United States.

Among the many processes that have been tried are the Kitson, Loomis, Humphreys-Clark and Rew, and at present Besemfelder in Germany is doing some work in this line.

This phase of the problem presents many attractive possibilities, especially to our western gas plants, and the various processes have been very thoroughly tried out. In general, however, from a coal gas standpoint, they have heretofore all failed.

In the first place, the available waste heat from a water gas set, even under the inefficient operating conditions that formerly prevailed, is not sufficient to thoroughly carbonize coal enough to supply the generator with fuel, and furthermore, this waste heat is being reduced very considerately with our improved appliances for the control and operation of water gas apparatus.

Secondly, the resulting gas, unless enriched, was but a poor grade of gas, and from a carbonizing standpoint could not compete with even low candle power coal gas.

Thus, we are forced to accept the use of direct heat transference through retort walls as the most practical method in the present state of our knowledge on this subject.

Methods of Carbonization in Externally Heated Closed Retorts.

Considering now the distillation of coal in closed fire clay retorts externally heated, there are three ways in which the process may take place.

First, using relatively small, thin charges, which partially fill the retort, leaving a considerable free space. This would represent the usual horizontal or incline working.

Second, using a relatively large, thick charge, with a free space, as in the coke oven or chamber.

Third, completely filling a vertical or inclined retort, so that there will be no free space.

General Conditions Affecting Carbonization.

With any one of these three methods, there are in general six factors that influence the course of the distillation.

1. The size of the coal particles.
2. The moisture content.
3. The actual temperature employed.
4. The volume of the charge relative to containing content.
5. The time during which the charge is heated.
6. The pressure under which the distillation takes place.

By tracing these back to their origin, we may simplify them into three main effects, viz., time, temperature and pressure, or, in other words, under any given condition of temperature and pressure it is the rate at which the heat penetrates the coal particles and the time that the gaseous vapors are exposed that determine the course and results of the distillation.

Every chemical reaction is accompanied by a heat change.

If heat is liberated, the reaction is known as exothermic, while if the heat is absorbed it is known as an endothermic reaction.

In general, a reaction proceeds in the direction which results in the greatest heat liberation, but under some conditions, and especially at high temperature, this does not hold, and where the reaction may proceed in one or more directions, if the time is sufficient for the reaction to attain equilibrium, then the ratios of the products formed will be a function of the temperature employed.

Heat Absorbed or Evolved by Coal in Carbonization.

At first sight, considering the usual course of the distillation of coal and the high temperatures that are required, we should suppose that this was a good example of an endothermic reaction, and it is still so considered by some, but the work of Mahler (1), 1893; Euchène (2), 1900, and later Constam and Schläpfer (3), and Constam and Kolbe, in 1906, have shown that actually the reaction is exothermic—that is, that heat is liberated during the distillation. Their results calculated to B. T. U. per pound of coal are as follows:

1. Constam and Kolbe.
   Constam and Schlapfer — 779 & — 436 B. T. U.
2. Mahler, — 457 B. T. U.
3. Euchène, — 115 B. T. U.
4. In addition to these figures, we have the work of Barnum (4), who showed a + value of 168.5 B. T. U.

From the nature of the methods which were used, the first two results would be in error by giving too high a figure, while Euchène's figures would be too low, so that I feel we might assume as a probable mean value about — 350 B. T. U. per pound; and from Constam & Schlapfer's and Euchène's works it is seen that the exothermic nature of the reaction increases with the volatile content of the coal (5).

This means that, excluding all ulterior influences, the heat required to decompose one pound of coal plus the heat absorbed in the formation of the endothermic compounds is 350

B. T. U. less than the heat liberated in the formation of the exothermic compounds.

Could we then bring a body of coal to the proper carbonizing temperature, and insulate it so that no heat could be lost, the distillation would proceed from the heat of the reaction. This is obviously impossible, however, since the gaseous vapors evolved would carry off heat, as sensible heat, from the reacting body faster than it was formed.

When we consider, however, a heat balance of the actual practical operation of carbonization, we will see that this heat given up by the reaction proper is but a small fraction of the total heat involved, and may practically be neglected.

A heat balance for a regenerative bench of eight retorts has been calculated from Euchène's work into English units, and represents about average good practice (6). The bench was giving 9,710 cu. ft. per mouthpiece, with a yield of 4.91 cu. ft. per lb. of coal at 13.5 c. p., and was using 14.8 lbs. coke per 100 lbs. coal carbonized; this is equivalent to 21.1 per cent. of the coke made. The waste gases left the recuperators at 1,112 degrees F., and contained 18.37 per cent. of CO_2, so the bench was being operated according to good modern practice. It will be noted that this balance gives a very small heat liberation from the reaction proper, due to the low volatile content of the coal used. When we study the percentage distribution of the heat absorbed as given in (7), we cannot fail to be struck by the large losses of heat in such a form that a large proportion of it should be recoverable. We have in this case 30.2 lbs. of coke consumed per 1,000 cu. ft. of gas made, none of the heat of which is recovered in the illuminating gas; this is almost exactly what we should expect to use for carburetted water gas where not only the heat necessary for the reaction must be furnished, but also about 74 per cent. of the total volume of the gas made must come from the fuel used.

General Stages of Carbonization.

The carbonization of coal in any retort proceeds in three general stages:

First—There is a preliminary decomposition, which begins as soon as the coal has acquired a certain fairly definite temperature; and as this stage is quite strongly endothermic, approaching, as it does, a fusion, the temperature remains practically constant until completion.

Second—The products resulting from the first stage, which consist principally of the higher members of the chain, or aliphatic series, suffer very considerable molecular rearrangement. In general, since the C-H bond seems stronger than the C-C bond, compounds containing less than three atoms of carbon are formed. This stage may be looked upon as a continuance of the simplification in which every distillation results.

These first two stages take place almost simultaneously within the charge itself, and are both endothermic.

Third—The gaseous vapors resulting from the second stage, when evolved from the protecting influence of the actual coal particles, are acted upon by the conducted and radiant heat of the more highly heated portions of the charge proper, of the sides of the containing retort and of the superheated surfaces above the coal (or free space).

The reactions taking place at this stage are very complicated, depending, as they do, on the time of exposure and the temperature, and in some respects resemble a reversible reaction. The aliphatic hydrocarbons are on one hand loosening their carbon bonds and splitting off the initial members of their series, while the residues unite into more complex carbocyclic compounds. These benzol compounds under the heat influence in time are decomposed with the liberation of hydrogen, carbon and the formation of still higher ring compounds. On the other hand, the free hydrogen present reacts on the aliphatic compounds.

It is this stage of the carbonization that is radically affected by the method of carbonization that is employed.

Coming now to a more detailed study of the changes that take place in these three stages, we will first take up the composition of the coal and the products formed.

Composition of Coal.

The coals used for gas making come under the general head of long flame coking coals. They will have a composition about as follows:

34-40 per cent. volatile matter.
Less than 12 per cent ash.
Less than 1.2 per cent. sulphur.

From the proximate and ultimate analyses given (8), their percentage composition is, quite closely:

Carbon	70 —80
Hydrogen	5.2— 6.0
Oxygen	6.8—16.0
Nitrogen	1.3— 1.9
Sulphur	1.0— 2.0

Calculating the molecular composition from the ultimate analyses would yield molecules about as follows, some foreign coals being given for comparison:

W. Virginia	Coal	C_{519}	H_{418}	O_{50}
Indian Ter.	"	C_{329}	H_{276}	O_{42}
English	"	C_{436}	H_{367}	O_{50}
French	"	C_{357}	H_{281}	O_{39}

Briefly, these formulae represent more closely the proportions in which the elements exist in the coal.

This must lead us to regard coal either as a complex molecule or a complex mixture. While it is usually considered a mixture, yet we feel that there are many valid reasons for considering it as a complex molecule. One such reason is the close agreement between the heating values calculated from the ultimate analyses and determined by the calorimeter, and another reason is that, in general, coals having similar ulti-

mate analyses yield comparatively the same results when coming from widely separated fields.

Composition of Products.

The products formed,—coke, tar, gas and liquor,—are likewise quite complex, and their complex composition varies widely with the particular treatment to which the coal has been subjected.

The coke (9), which may be considered as the carbon residue remaining from decomposition of the coal, has a composition much less complex than the coal, and may, in general, be of the same molecular structure. This would tend to show a ring structure in the coal itself, as in the chain compounds the C-C bonds are weaker than the C-H bond. From the tables of proximate and ultimate analyses we deduce a molecular formula as follows:

French coke	C_{280}	H_{26}	O_8
American coke	C_{347}	H_{29}	O_{14}

Coming now to the tar (10), this we know to be a mixture of hydrocarbons which have resulted from the manifold decompositions and polymerizations that occurred during the second and third stages. Its average composition approaches that of the original coal, and this fact may indicate the probability of the coal also being a mixture. But on the other hand, if we should attempt to distil the tar as we do coal, there is a wide variation in the results obtained; being a mixture, the components are all simultaneously affected, and in general the result is an enormous amount of free carbon as soot, hydrogen, some methane, and the bulk of the tar unchanged.

We may calculate the average composition of tar from

Mahler	C_{18}	H_{13}	O
Euchène	C_{27}	H_{22}	O_2

The complete analysis of coal gas is a very difficult and elusive problem, and for general purposes has but slight value. Bunsen and Fisher in Germany, and Berthelot in France, have made some classical analyses, but their results were obtained

usually by methods that are now considered of doubtful accuracy. These analyses of Bunsen, Fisher and Berthelot (11) are given, and also some determinations made by freezing out the condensable hydrocarbons. For comparison are given (12) some contemporary analyses of coal gas generated in the three usual methods practised today, viz., horizontal retorts, vertical retorts and coke ovens.

A sample of ordinary coal gas may consist of the following gases:

Benzol Homologues	$C_n H_{2n+6}$	Benzol, Toluol and Xylol
Ethylene "	$C_n H_{2n}$	Ethylene, Propolyene, Butylene
Methane "	$C_n H_{2n+2}$	Methane, Ethane, Propene
Hydrogen	H_2	
Oxides of carbon	CO & CO_2	
Oxygen	O_2	
Nitrogen	N_2	
Ammonia	NH_4	
Cyanogen	CN	
Sulphuretted Hydrogen	$H_2 S$	
Carbon Bisulphide	CS_2	

Strictly, the gas and tar should be considered together, as they are both evolved as vapors, and their relative composition is a question of the vapor tensions of the constituents, which in turn depend upon the temperatures to which these evolved

---

It might be well to call attention to the inaccuracy in any gas analysis where both the hydrogen and methanes are calculated directly from the explosion due to a residue of carbon monoxide that always remains after treatment with the cuprous chloride solution that is customarily used for this purpose. This results in too low CO and hydrogen and too high methane. For example, a mixed gas was analyzed and its composition calculated both from the explosion and combustion over palladium and from the explosion itself.

By Explosion and Combustion			By Explosion
Ill.	13.20		13.20
CO	31.10		28.50
H_2	36.45		29.65
CH_4	8.40	12.60	19.32
$C_2 H_6$	4.20		
CO_2	2.50		2.50
O_2	.30		.30
N_2	3.25		5.93

vapors are treated. This is further complicated by the solvent action of the heavier members of the hydrocarbons. In general, the lower members of any series have the highest vapor tension and lowest specific gravity; therefore, we find them present in the gas while the higher members are found in the tars. This fact is clearly shown (10) by the decreasing ratios of carbon to hydrogen in the tars as they are deposited at greater distances from the retort.

From the table given of the analyses of the gas, we have calculated them into percentage by weight (13), elementary composition (14) and average molecular formula, as follows:

$$\text{Euchène} = C_{10}\,H_{41}\,O_3$$

The ammonia liquor, of which a fairly complete analysis is given (15 and 16), may be considered for our present purpose as merely representing the water driven off and formed during the distillation.

Distribution of Elements of Coal in Products of Carbonization.

Summing up these products, and using as a basis their distribution as determined by Euchène, we would have the elements in coal distributed among the several products as shown in (17).

Following the theory of Mills, but regarding the coal as a more complex molecule, we would have the following tentative equation to explain the result of distilling this particular coal:

$$\underset{\text{Coal}}{C_{357}\,H_{281}\,O_{39}} = \underset{\text{Coke}}{C_{280}\,H_{26}\,O_8} + \underset{\text{Tar}}{C_{27}\,H_{22}\,O_2} + \underset{\text{Gas}}{5C_{10}\,H_{41}\,O_3} + \underset{\text{Water}}{14\,H_2\,O}$$

If we calculate the heats of combustion by the Dulong formula, we would find this reaction exothermic by 2.42 per cent. of the total heat. This means that the heat of combustion of all the products from the coal is less by 2.42 per cent. than the heat of combustion of the coal, or that 2.42 per cent. of the calorific value of the coal (14,000) or 339 B. T. U. has been liberated and thus lost in the distillation.

Heat Flow Into Retort and Charge, Temperature Variations, and Progress of Distillation.

When we introduce a charge of coal into a hot retort the first effect is, of course, an immediate reduction of the temperature of the interior skin of the retort as the heat is absorbed by the cool charge.

Since the conductivity of fire-clay is very low, this supply of heat cannot be immediately replaced from the hot combustion gases, but must come from a lowering of the temperature of the body of the retort, which in conjunction with the interior tile of the combustion chamber acts as a "fly-wheel" or storer of heat. This may be a rather roundabout method of explaining the fact that with our present facilities we have not an unlimited supply of heat of the requisite degree to draw upon, and must, therefore, regulate to some extent the rate at which we may withdraw it.

When the coal particles are exposed to heat, they acquire the temperature of the enclosing body in two ways—by conduction and by radiation. Experiments have shown that heat penetrates through the charge between four and five times as rapidly by conduction as by radiation, which argues immediately for a completely filled retort, in which case the primary transmission is entirely by conduction.

Under the influence of heat some gas is immediately evolved, even at temperatures as low as that of boiling water; in fact, all coal contains some occluded gases that may be removed in a vacuum even at the ordinary temperatures (18).

As the temperature rises, however, liquid products, principally water with some tarry matter, begin to come off (19) (20a). The coal proper now seems to partially fuse, and the distillation proper may be said to begin.

A number of experiments (20b and 21) have been made to locate this starting point; and it may be assumed to be (21) about from 660-700 degrees at the start, and to remain nearly constant until this first stage is completed, when it rises to

750-800 degrees, at which temperature the coal could be converted into coke.

Bornstein, who in 1906 made the most extensive experiments and with the most improved apparatus, found that for a large number of coals distillation commenced at from 630 degrees to 815 degrees, the first combustible gas coming off between 660 degrees and 825 degrees. The average beginning of the distillation and evolution of gas would then seem to be in the neighborhood of 750 degrees.

We may then consider that carbonization of the first stage progresses with an isothermal line of, say, 725 degrees F. in the coal.

We have been considering now simply that layer of coal that is in immediate contact with the sides and bottom of the containing vessel. When we come to consider how this heat of carbonization penetrates through the charge proper, we have a number of conditions to consider. Even if the charge was a monolith, it would require almost twice the usual time for the heat to penetrate by conduction alone (*) so we are forced to assume that about half the heat is transmitted by the hot vapors, heating the coal as they pass through the charge. It is in this respect that we find a fundamental difference in the three methods usually employed in carbonizing. Charts K, L and M show the progress of the carbonization in the horizontal, vertical and coke ovens. Chart (A), showing the rise in temperature at different parts of a charge in horizontal, vertical and coke ovens, is attached, which shows this very clearly.

From further charts (B and C) we see the variations in temperature that have been observed in different parts of a charge in both horizontal retorts and coke ovens.

It will be seen that in the horizontal retort the heat penetrates much more quickly than in a completely filled retort, not only on account of the smaller bulk of the charge which causes less preliminary cooling, but also on account of the fact that the heated gases may circulate more freely.

*M. Gueguen, London Journal, May 27, 1884, p. 915.

The relative rate of carbonization toward the center of charge has been estimated at from 1.0—1.5 in. per hr. in horizontal retorts working at a high heat, .5 in—.6 in. in vertical retorts and .3 in.—.5 in. in coke ovens.

This rapid heating then shortens the first and second stage of the distillation, and alters to a very considerable extent the character of the second stage as the products are exposed to higher neighboring temperatures.

The factors that influence this rapidity are, first, the available head of heat, the size of the individual particles of coal and its moisture content.

The available head of heat depends on the actual temperature of the retort walls and their heat capacity (i. e., volume times specific heat), their conductivity and the heat head, or the temperature difference between the interior and exterior of the retort.

We have very little data regarding the conductivity or specific heat of fire-clay materials at high temperature, and much of this data is contradictory. In general, however, we believe that the specific heat of fire-clay material is not far from .20.

Euchène has calculated the hourly rate of heat transmission through a horizontal retort. His figures reduced to English units were as follows for a 350-lb. charge:

1st hour	127,732 B. T. U.
2nd hour	60,109 B. T. U.
3rd hour	55,423 B. T. U.
4th hour	43,353 B. T. U.

Considering now that the internal periphery is 66 in., the internal surface is 49.5 sq. ft., and assuming a combustion chamber temperature of 2000 degrees F., and the coefficient of conductivity of 11.25 B. T. U. per sq. ft. per degree per hr., this would correspond to the following internal temperatures:

1st hour	1341 degrees F.
2nd hour	1676 degrees F.
3rd hour	1701 degrees F.
4th hour	1768 degrees F.

which seems to correspond quite closely with observed results.

This all goes to show that if we wish to secure the maximum rate of transmission of a line of temperature of 725 degrees F. through the coal particles, we must first bring them into intimate contact with the heated surface, and also must allow a certain percentage of voids for the circulation of the gases.

The actual size of coal has been investigated with relation to its influence on carbonization. It has been shown (*) that the maximum size of a lump of coal that would be properly carbonized at the center in four hours, to be a sphere 2½ in. in diameter. This point is important in considering the adjustment of coal crushers. From practical tests (22) this has been proven to be the case, that the larger the size of the coal (when of uniform size) up to a certain point, the higher the candle feet. This we also see in the increased candle feet from ¾-in. screened coal as against run-of-mine, even allowing for the increased percentage of ash in the latter.

The principal object to be desired, then, is to quickly raise the coal to the point of carbonization and drive off the evolved gases. To a certain extent, the effect of the pressure is felt here. Experiment has shown that the effect of an increase of pressure in the retort is to considerably lengthen the time required for distillation, and of a vacuum to shorten it. This has led to the suggestion of reverting to the use of iron retorts heated to not over, say, 850-900 degrees F., and worked under a very high vacuum. However, it does not seem to have been carried out in practical form, though from the results obtained in other distillations with a reduced pressure we should expect a very rapid evolution of gas, but with slight decomposition, which would mean a high percentage of hydrocarbon of the methane and ethylene series with almost no benzol and hydrogen. The gas would doubtless be very tender, but of high candle power and heating value.

Referring now more particularly to the products of the first two stages, they have been found, as stated in the

*M. Gueguen, London Journal, May 27, 1884, p. 915.

foregoing, at a temperature not far from 750 degrees F. In general, at such low temperatures we expect the formation of exothermic compounds, such as the members of the methane and ethylene series, while we do not expect the benzols and related compounds, as these are all endothermic. We feel that these products, which doubtless consist of the higher members of the methane and ethylene series such as hexane, pentane, butane, butylene and propylene and long chain compounds, break down even under this low temperature into simpler members of their series, following also the general law of maximum heat liberation, that is, members containing less than three carbon atoms, splitting off the primary members, methane and ethane.

Effect of Composition of Coal.

The elementary composition of the coal does not help us much except in a general way, in predicting the nature of the products. We find with increasing H_2 a general increase in volatile constituents. Increasing O_2 is shown by rapidly increasing proportion of CO and CO_2, while it seems also that with increasing O_2 the non-gaseous volatile constituents increase, which means that the tendency is to form more complex molecules, such as benzol, anthracene and pitch, which should result in higher illuminants. These facts are shown in (23) and (24).

The presence of moisture in the coal, except for its depressing effect on the early temperature of the retort, does not have any appreciable effect on the gas, as it is nearly all driven off before the carbon in the coal has reached such a point that it will noticeably react with it. It does react, however, with the carbon on the sides of the retort to some extent, and tests have shown a tendency toward slightly higher percentages of CO_2 in gas while using wet coal.

Beyond the formation of the carbon oxides by water vapor, their ratio does not seem to bear any very clear relation to the temperatures employed, as they both seem to decrease with the course of the distillation; and this would argue

slightly for their being influenced to some extent by hydroscopic moisture in the coal.

Effect of Heat Upon Products After Distillation.

When now the gaseous vapors have been evolved from the coal, and are acted upon by the radiant and conducted heat of the charge and the containing vessel, the more important changes are commenced.

To understand more clearly the changes which we may expect, charts have been prepared showing the variations in the course of carbonization by the several methods;—the rate of gas evolution (d), the composition of the gases evolved (e and f), the illuminating power (g), the heating value (h). In the appendix (25 to 36a) the detailed compositions are given, including the impurities such as hydrogen, sulphide, ammonia and cyanogen.

A general comment on the facts thus shown would be superfluous, as the variations will be considered in detail.

The factors that influence the third stage of the distillation, viz., the actual temperature in the retort, the time of exposure and the pressure, are so intermingled that it is somewhat difficult to give each its true value as affecting the whole.

As the temperature is the active agent in the reaction, its effect will be first considered.

The gas and its composition are of the greatest importance, so that we will consider primarily the changes brought about by the heat action on the hydrocarbons evolved in the second stage of the reaction.

As stated before, we feel that the hydrocarbons resulting from the second stage of the distillation consist principally of the olefine and paraffin series containing less than three atoms of carbon. When these hydrocarbons are subjected to temperatures from a dull red, say 1000 degrees, to the highest temperatures attained in a retort, about 1800-1900 degrees F., they undergo a very complex rearrangement. A great deal of work has been done on this problem, and several theories have been advanced to account for the observed results.

Marchand assumed for ethylene a decomposition to C and CH_4 when the CH_4 would be resolved into its elements.

Berthelot did a great deal of work on the decomposition of the olefines and paraffins, and their polymerization into benzol and naphthalene. He assumed that there was no direct decomposition to the elements, but a gradual concentration of the carbon atoms with evolution of hydrogen, until finally carbon resulted from the decomposition of a very dense carbon compound. He assumes the formation of acetylene as a primary product, and with its help elaborated a scheme of polymerization up to benzol, naphthalene, etc. His equation for the decomposition and polymerization of the hydrocarbon are given in detail in the appendix (37 and 38). He considered then that at any given temperature we should have an equilibrium established between these various products.

Lewes has later, in his work on the cause of luminosity in flame, subscribed to this idea of the primary formation of acetylene, to whose instantaneous decomposition he ascribes the light giving property of flames. He made a number of experiments on the action of hydrocarbons under the influence of heat, which are given (39 to 42). His equations for the decomposition of methane and ethylene are as follows:

$$3C_2H_4 = 2C_2H_2 + 2CH_4$$
$$2CH_4 = C_2H_2 + 3H_2$$

Hunt follows Berthelot and Lewes, and assumes the following reactions to occur:

$$C_nH_{2n+2} \longrightarrow 2CH_4 = C_2H_2 + 3H_2$$
$$C_nH_{2n+2} \longrightarrow 3C_2H_2 = C_6H_6$$

$$C_nH_{2n} \longrightarrow 3C_2H_4 = 2C_2H_2 + 2CH_4$$

$$C_nH_{2n-6} \longrightarrow 4C_7H_8 = C_{10}H_8 + 3C_6H_6 + 3H_2$$

and this may be held as the usual English viewpoint of those following Berthelot and Lewes.

On the other hand, Armstrong and Miller and Haber have vigorously attacked the acetylene theory, and the former found (43), from their oil gas work, that there was formed during the distillation of the petroleum oil used considerable quan-

tities of ethylene and other normal olefines, as well as benzol and other ring compounds, but found only traces of acetylene; while in general, as the temperatures increased, the olefines decreased and methane increased.

Haber, after citing Berthelot's work, and also Lewes' conclusions, finds that there is nothing to be gained by the assumption of the primary formation of acetylene even if the observed data warranted it, which he denies. He worked principally on hexane; the results of his experiments are given in the appendix (44). He finds two stages of the decomposition. First, at temperatures from 1,100-1,500 degrees F., the lower initial members of the series are split off, forming gaseous products, while the higher residues combine to form complex molecules; he finds but little hydrogen split off and no rebuilding action on the olefines, neither does he find any evidence of equilibrium, as Berthelot claimed. At temperatures above 1,500 degrees F. these simpler relations do not hold; hydrogen is split off, and the residue forms complex tarry compounds. He here admits, however, that acetylene may be formed, which must then polymerize into benzol or decompose into its elements, as no determinable traces of it were found; he considers then that hexane decomposes as follows:

$$C_6 H_{11} = CH_4 + C_2 H_4 + C_3 H_6$$

Bone and Coward, who are the latest workers in this field, now endeavor to reconcile the different opinions, and have evolved a simple hypothesis to account for the observed data. They have made a number of experiments on the effect of heat on the hydrocarbons, methane, ethane, ethylene and acetylene, which are given in the appendix (45 to 50). They call attention to the remarkable stability of methane, that up to 1,470 degrees F. it is practically stable, and that even at 2,100 degrees F. it is only decomposed by contact with the heated surface, which is a rather striking corroboration of Tyndall's law* of the effect of heat on complex molecules. Their

*Tyndall's law says that the effect of radiant heat is dependent on and increases with the complexity of the molecules acted upon.

experiments on ethylene at 1,500 degrees F. show that, while acetylene and hydrogen were formed, there was little free carbon; this is contrary to Lewes' theory, his equation ($3C_2H_4 = 2C_2H_2 + 2CH_4$), indicating that the hydrogen must have resulted from the decomposition of C_2H_2 into $C_2 + H_2$. They also show that the tendency for acetylene to polymerize is a maximum between 1,100-1,300 degrees; this should furnish us with a valuable clue to the proper temperature necessary to secure the maximum illuminating value from the illuminants. This temperature has been verified in another manner in our water gas practice, where the best results seem to be obtained with temperatures ranging from 1,250 degrees to 1,350 degrees F. in the fixing chambers. The critical point at which acetylene decomposes into its elements is about 1,500 degrees, which should be the theoretical upper limit to our carbonizing temperatures.

They then advance the following theory. In the case of the olefines and paraffins, the primary action is an elimination of hydrogen and a loosening or dissolution (according to the temperature) of the bond between the carbon atoms. At high temperatures, with a dissolution of the bond, nascent—may we say—residues are formed such as $= CH_2$ and $= CH$. These may pursue three courses:

a. By direct union with other residues form ethylene $H_2C = CH_2$ or $HC = CH$ acetylene.

b. Break down into carbon and hydrogen.

c. Be "hydrogenized in the atmosphere rich in hydrogen to methane," which has been shown to be so stable, and whose heat of formation is by far the highest.

In the case of acetylene, the primary change will be at lower temperatures directly one of polymerization, or at higher temperatures the formation of $= CH$ residues, which

a. Decompose into their elements.

b. Are hydrogenized into methane.

This theory of Bone and Coward unites to a very considerable degree the main contentions of the different workers in this

field, and forms a plausible explanation of most of the observed phenomena, so we feel that at the present time it is the most serviceable.

It is unfortunate that the reactions have not been studied more thoroughly from the thermodynamical standpoint, as it is only in this way that we may hope to find the ultimate solution of this complicated problem.

This thermodynamic reaction between carbon, hydrogen and methane has been studied by Mayer and Altmayer.*

They find for the reaction,—

$$C + 2H_2 \rightleftharpoons CH_4$$

The equilibrium at the different temperatures as shown on the diagram given (1).

Since the water gas reaction has been investigated, we may combine these two reactions to,—

$$CO_2 + CH_4 \rightleftharpoons 2CO + 2H_2$$

The acetylene equilibrium has been studied by V. Wartenberg.**

$$2CH_4 \rightleftharpoons C_2H_2 + 3H_3$$

From these three equations and the equilibrium Constants (51), we may calculate the quantities of any of the members as a function of the temperature.

Studying these results, we find that they show the following several interesting features: Methane cannot exist in equilibrium with hydrogen over carbon even at a red heat, as it will, at 1460 degrees F. and with ample time for reaction, be completely broken down either into acetylene and hydrogen, or carbon monoxide and hydrogen; moreover, at any temperature the percentage of methane is greatly affected by the pressure, increasing with increase in pressure, and vice versa. To fulfil these reactions, sufficient time must be allowed for them to proceed to equilibrium, so that at the average contact time allowed we do not have this taking place; however, they show the direction in which we may expect them to proceed. They

* Berlin Berichte, Vol. 40 (1907), p. 2134.
**Zeit. f. Anorg. Chemi. 52 (1907) p. 299.

show that in our blue water gas we cannot expect to make any appreciable quantity of methane, but that its quantity will increase with the pressure and rate of make. They explain to some extent why a low pressure in the retort gives more hydrogen and a high pressure more methane. They also explain the sudden drop in methane and increase in hydrogen and carbon monoxide that is noted at the very end of the carbonizing period when the average time of exposure rises to about 60 sec. and the reaction,—

$$CO_2 + CH_4 \rightleftharpoons 2\ CO + 2\ H_2$$

may almost reach equilibrium.

It is to be hoped that these theoretical studies will be extended to include ethylene and benzol, when we will have a firmer basis for our practical operating theories.

In the light of the foregoing theory, let us examine the actual changes that do take place in our carbonizing period.

From the tables shown of the variation in elementary compositions and products formed at various carbonizing (52 & 20a & 53) temperatures, and also their effects on the tar (54), the general result of increasing temperatures seems to be a decrease in the illuminants, methane and tar, and an increase in the hydrogen, carbon and naphthalene and higher cyclical compounds. We must, however, remember the important fact that the decrease in the percentages of the illuminants, and more especially of the methane, is due to some extent to the actual increase in volume which results from the decomposition of a hydrocarbon into its elements. For example,—

Ethylene $C_2\ H_4 = 2\ C + 2\ H_2$
1 Vol. = 0 + 2 volumes.

Methane $CH_4 = C + 2\ H_2$
1 Vol. = 0 + 2 volumes.

Acetylene $C_2\ H_2 = 2\ C + H_2$
1 Vol. = 1 vol. no change

In the tars we see that the great increase in the pitch, due to some extent to the increase in free carbon, tends to mask

the increase in anthracene, while the naphthas and light oils almost disappear.

Carried then to an eventuality, we should have at a high enough temperature practically pure hydrogen in the gas and carbon in the tar.

Considering the analyses of gases, already referred to, showing the variation of composition during carbonization, and comparing them with the temperatures observed, it is seen that the pronounced drop in candle power occurs when the outer layers of coke have reached 1600 degrees to 1800 degrees F.; this would accord with the temperatures of decomposition of the acetylene found by Bone and Coward.

In coke ovens, experiments have shown that samples of gas taken at different points from the edge to the center of a charge showed no benzol at the edge to .8 per cent. at the center. In other words, we do not require any free superheating space to make benzol if we can raise the temperature of the coal to 1300 degrees F. This has an important bearing on the course of distillation in vertical retorts where no free space exists. It was at first claimed that these retorts could not make satisfactory illuminating gas as there was no free space whose radiant heat was held essential to the formation of the benzol compounds. With a fair American coal, we have obtained as high as 15.7 c.p. from our vertical retorts.

Benzol is itself stable up to about 1,650 degrees F., but apparently even below this temperature, say, at 1500 degrees F., the polymerization towards benzols ceases markedly, and it is not that the benzol is decomposed, but no longer formed, that causes the decrease. Experiments on the polymerization of the benzol homologues are given (55); these show in general but slight formation of gaseous compounds except at extremely high temperatures, and then their products are principally carbon and hydrogen.

Gasification of Tar.

The foregoing leads us immediately to the question of the

gasification of tar which has been very widely experimented upon.

The idea of the gasification of tar was a very alluring one to the earlier workers in the coal gas industry, and has continued to attract a good deal of attention until the last ten years. The principal experimenters were as follows:

Montaban	1838
Lowe & Kirkham	1839
Grafton	1841
Murdock	1845
Salmon	1855
Basford	1857
Eveleigh	1869
Dinsmore	1888

At first the idea was to make a high candle power gas, but this gradually dwindled to making gas at all, continuously.

The earlier experimenters, except Lowe & Kirkham, attempted to directly gasify the tar in retorts as they would oil. Lowe & Kirkham passed the gas from the last half of a charge over a fresh charge, while Eveleigh took the bull by the horns and attempted to first distill his coal and obtain a maximum yield of tar and then gasify it.

Dinsmore, however, returned his tar as it was made directly back into the retort. His process attracted probably more attention and was more thoroughly tried than any of the others, so it will be considered more in detail. The Dinsmore patents are as follows:

British, No. 2096, Feb. 11, 1888, J. H. R. Dinsmore
" " 885, Mar. 31, 1888, "
11104, July 10, 1889, I. Carr
10488, June 28, 1889, J. H. R. Dinsmore
5145, Mar. 26, 1889, "

His idea was that the following reaction would take place:

1. The higher paraffins ⟶ lower member (CH_4) & H_2
2. Olefines ⟶ acetylene and hydrogen
   ⟶ paraffin and free carbon
3. Benzene ⟶ acetylene and hydrogen
4. Naphthalene and anthracene unchanged.

Unfortunately, while tar possesses similar elementary composition to coal, its elements are very differently combined. The paraffins and olefines are lacking. Benzol and its lower homologues exist in but small percentages, while its great bulk consists of compounds that have been formed and are therefore practically stable at the temperature existing in a coal gas retort.

Being a mixture, when we attempt to gasify it, therefore, all its elements are exposed directly to a temperature at which only a small fraction are unstable. The lighter members are decomposed principally into enormous quantities of free carbon, with a little hydrogen and some methane and carbon oxide, while the heavier members simply volatilize and are immediately recondensed unaltered.

Approaching it from another viewpoint, considering that the proportion of hydrogen determines the availability for gasification of the carbon in a hydrocarbon, we observe that in coal gas we have at the ordinary temperatures a ratio of about 1 H — 3 C by weight, while in oil gas work we may approach 1 H — 5 C. Now tar consists of about 80 C $7H_2$ $11O_2$, so that we could only expect to gasify some 42 per cent. of the carbon even if it were in a state favorable to gasification.

From a practical standpoint, in the gasification of tar the enormous quantities of free carbon and pitch that had to be handled caused difficulties that proved almost insurmountable, and in 1890 Dinsmore stopped returning the tar directly, and passed the gas from six retorts through one retort heated to some 1700-1800 degrees at the inlet, and 1200-1300 degrees at the outlet, where it was passed out through a water jacketed stand-pipe in a vain attempt to overcome stoppages from dust, soot and pitch.

I. Carr, at Widnes, of cheap gas fame, was the last champion to give up the fight against theoretical and practical difficulties.

Watson Smith made a detailed investigation of the changes

in the tar, his analyses being given (56). In general, the results were as would be expected,—a decrease in the light oils and an increase in the anthracene, pitch and free carbon.

The solution of the problem of the gasification of tar lies in exposing it to an extremely high temperature and filtering out the free carbon, as is done in the Methane-Hydrogen Process of Lewes & Tully, but at the present time it seems more economical to make as little as you can, as in the vertical retorts, and work that up into by-products.

Formation of Impurities.

We must consider also the other gaseous products formed during the carbonization, viz., ammonia, cyanogen, sulphuretted hydrogen and carbon bisulphide. The ammonia and sulphuretted hydrogen are exothermic, while the others are endothermic. These qualities determine their appearance in the carbonization.

The ammonia and hydrogen sulphide both appear early in the distillation, soon reach their maximum, and then rapidly decline, the ammonia somewhat faster than the sulphuretted hydrogen, while the cyanogen and carbon bisulphide increase as the temperature rises.

Some tables (57 to 60) are given showing the variation of these bodies during the carbonization, and their occurrence under different conditions of temperature and method of carbonizing employed. There has been a good deal of work done on the decomposition and formation of ammonia and cyanogen from the nitrogen in the coal, especially as to the effect of neutral gases, such as steam on the direction of the reaction.

At the present time we feel warranted in assuming the primary formation of ammonia from a breaking down of a nitrogenous ring compound, resembling perhaps the ferrocyanides, in the coal during the second stage of the process.

At higher temperatures the ammonia breaks down, and while the reaction is not reversible it may proceed in two direc-

tions, either combination in the presence of carbon to cyanogen or decomposition into the elements, as follows:

$$(N)_n\ P_m \longrightarrow NH_3 \begin{cases} \longrightarrow 2\ CN + 3\ H_2 \\ \longrightarrow N_2 + 3\ H_2 \end{cases}$$

The decomposition seems to be a phenomenon almost entirely dependent upon contact with a heated surface, and the influence of a neutral gas only affects the extent of the reaction by reducing the chance of impact of the ammonia molecules on the heated surface and decreasing the time of exposure. Water Vapor and Carbon Monoxide slightly increase the decomposition, other conditions being equal.

The critical temperatures of maximum yield seem as follows:

For ammonia . . .	850°— 900° F.
Cyanogen . . .	1650 —1750° F.
Decomposition into elements	1900° F.

But little work has been done on the sulphur compounds The proportion of volatile sulphur in the gas to the total sulphur in the coal depends largely on the condition in which the sulphur existed originally in the coal. Generally, however, as the percentage of total sulphur in the coal increases the sulphur compounds in the gas increase. Some tests are given (61) showing how these conditions may vary with some American coals.

The relative proportions of the so-called fixed sulphur compounds we find to increase with the temperature of carbonization. The average of some tests made by the German gas companies (*) showed that when using all English coal the purified gas from horizontal retorts showed 42.25 grains of fixed sulphur compounds per 100 cu. ft. as against 21.74 grains for the vertical retorts, this showing the influence of the lower temperatures to which the gases are subjected in the vertical retort.

Effect of Time of Exposure of Gas to Heat.

So far we have been considering the effect of temperature

* Journal für Gasbeleuchtung, Feb. 1, 1908, p. 83.

alone. If now we introduce the effect of time of exposure we find another complicating effect.

In any heat reaction in the presence of a temperature at which the reaction may proceed, the completion of the reaction depends upon the extent to which the molecules have come into contact with the heated surfaces in the case of simple gases, and the time during which they have been exposed to the action of radiant heat in the case of complex molecules, or if sufficient time were allowed the action would go on to completion. By varying the time even under excessive temperature conditions, we may very considerably alter the extent of the decomposition. It is for this reason that, requiring as we do a high temperature to secure a rapid evolution of the gases from the coal, we must counteract this effect by shortening the time of contact by contracting the free space allowed for gas travel. We may approximately estimate the time of contact in a horizontal retort, as follows:

Assume a D retort 15 in. x 26 in. x 9 ft. 1 in. long, burning off 360 lbs. of coal in 4 hrs., with average hourly retort temperatures of 1200-1400-1600-1800 degrees, respectively, and yield 5 ft. per lb. Assume also that the hourly makes are 4.43 per cent., 31.6 per cent., 18.8 per cent., 6.2 per cent. respectively.

We would find by calculation that the average time of exposure is,—

10.7 sec. during the first hour.
11.5 sec. during the second hour.
14.9 sec. during the third hour.
45.9 sec. during the fourth hour.

With an average of 13.9 sec. for the whole charge. Referring to the chart (C), we see that as the time of exposure increases the temperature also increases. Thus, it is probable that some of the gas at the early portion of the charge has not been thoroughly decomposed, while the later portions of the charge have been over-exposed to heat and decomposed.

Considering again the relation of the size of charge to the cross section of the retort, we have two opposing facts, the

smaller charge giving more free space and consequently longer exposure, while the more rapid evolution of gas tends to decrease this time. Furthermore, with the very small free space allowed by the large charge, we intensify the effect of the surface decomposition which has been shown to be of the greatest effect on the hydrocarbons. Some calculations made on Verdier's experiments, as shown on table (62), show that the average time of exposure remained practically the same in his last three cases, viz., 13.9-13.8-13.7 sec., yet the candle-power increased with the free space due to the lessened effect of the surface contact. Thus, we may easily overstep the economical limit of the size of charge because of this effect, in addition to the detrimental cooling of the retort, already alluded to, by so large a charge.

In order to avoid to some extent the foregoing difficulties, it has been proposed to use an elliptical retort, a sketch (J) of which is given, set with its major axis vertical. This would give a small free space per unit of charge, large area of contact of coal with retort sides, and great structural strength.

Reference should be made to the proposal of Young & Glover (British No. 20125, Sept. 11, 1896) for a fractional distillation, as it were, of the coal. They propose to carbonize a large portion of the coal at a high temperature, producing a rather low candle-power gas, and after condensation and removal of its tar, mix this gas with the hot gases resulting from the distillation of the smaller portion of the same or a richer grade of coal carbonized at a low temperature. In this manner they hope to absorb in the large volume of dry (relative to the benzol vapors) gas the excess of illuminating hydrocarbons present in the low carbonization temperature gas which would otherwise be deposited in the tar. This savors somewhat of the Shadbolt so-called self-enrichment process that attracted considerable attention about 1895, which consisted in returning a portion of the purified gas to the foul main at some point before the condensers. In both processes, the idea has evidently been to hold up the benzol vapors present by the excess of

"dry" gas, as the benzol homologues give a greatly increased efficiency as diffused in the gas over any possible method of afterward cracking them from the tar.

Effect of Pressure in Retorts.

The question of the pressure under which the retorts should be worked is complicated by the opposite effects produced by excess in either direction.

According to Wanklyn's law, the quantities of vapors are proportional to the product of their vapor tensions and vapor density, at the boiling point of the mixture.

By decreasing the pressure then, we should expect to obtain a larger proportion of the lighter benzol homologues, and facilitate the evolution of the gases from the retort; while on the other hand, in clay retorts we should tend to draw in furnace gases through the cracks and pores of the retort, a small percentage of which would seriously affect the candle-power.

An increased pressure would, however, by decreasing the rate of evolution of the gases both from the coal itself and from the retort, tend to overheat them, causing excessive decomposition and formation of graphite.

We should, therefore, seek some mean pressure that will just be short of drawing in the furnace gases. We may secure this in two ways, by using either a light seal and an even gauge in the hydraulic main, or a heavier seal with a higher vacuum in the main. From a practical operating standpoint, a nearly level gauge is to be desired for freedom from air leakage, yet with too light a seal the hot gases seem to thicken the tar in the main, which is very undesirable. Again, with the variations in the level of the liquor that are bound to occur in regular operation, we cannot run with too slight a margin. A 3/4-in. seal seems to be the lightest that can be satisfactorily operated with under usual conditions. The use of enlarged and serrated edged dip-pipes enables a lighter seal to be carried without difficulty from the tar.

Some experiments made by A. O. Brown (63) show the

effect of varying conditions of seal and hydraulic main pressure.

Under whatever conditions chosen, it has been pretty thoroughly demonstrated that we should endeavor to keep them constant, and the English experience with retort house governors seems to show that their use is very desirable.

Use of Neutral Gases in Retort.

The use of a neutral gas to effect a lowering of the concentrations, and thus the decomposition, of the hydrocarbons by diluting the gases in the retort, was very extensively exploited some years ago under the patronage of V. B. Lewes, who patented a process for mixing blue water gas with the coal gas in the retort, and a great many tests were carried out with contradictory results.

In general, it was found that under proper operating conditions the blue gas was more effective when introduced into the hydraulic main than in the retort, when it simply carried off a small quantity of the benzols from the tar, seriously decreasing its value.

Later, the use of superheated steam introduced above the charge at the back of the retort to expedite the removal of the gas from the retort, has been patented. It seems very successful in cooling down the retort.

These suggestions in general have been answered by Young's work on the effect of neutral gases, where he shows that the direction of the decomposition is not changed at all, but its extent may be altered slightly.

Ammoniacal Liquor Sprayed Into Dip-Pipe.

From a practical point of operating, we feel that we should mention the use of ammoniacal liquor sprayed into the dip-pipe as a means of preventing the formation of lampblack in the bridge pipes, stoppage in the ascension pipes and thickening of tar in the main. To be sure, its use does not remove the cause, but it does remove the trouble and permits operation at high

makes per mouthpiece with a minimum of pipe jumping, and entirely obviates choked mains. This process is now subject to patent application.

Summary.

Summarizing the conditions that theory would indicate and those found by practice, we have almost exactly opposed conditions.

From operating necessity, the size of the retort is pretty well fixed, while the economic demands of gas made per dollar expended in fixed charges require a high make per mouthpiece—this fixes a short heavy charge at a high heat. Thus, we find theory demanding a light, thin charge not over, say, 2 to 3-in. thick worked off in from 2 to 2½ hrs., at a moderate temperature in a broad flat (D) retort, while our best practical figures seem to be obtained by a charge of about 380 lbs. in a 16x26-in. retort worked at a high heat in four hours. There seems to be a certain equilibrium, however, between the size of charge, the cross-section of the retort, and the temperature employed and the time of charge, which give the most efficient results (64 to 67).

However, these economic points are so dependent upon local conditions of send-out and candle-power requirements, cost of labor and bench renewals and market for residuals, that their general discussion is obviously of little value.

We feel, however, that it must be evident that in any form of retort or charge having a free space, we can never expect from the nature of the process to obtain anything more than an economical mean between almost perfect carbonizing conditions at some period during the charge, and very inefficient conditions at the end, and probably also at the beginning.

The value of uniformity of conditions has been strikingly shown in the operation of water gas apparatus. May we not hope for as much improvement in a method that will, to a considerable degree, secure them in coal gas work?

APPENDIX

REFERENCES—TABLES—CHARTS.

Reference No. 1

H. Mahler.—Bulletin à la Société à Encouragement pour l'Industrie Nationale 1892, p. 319. Thermic Balance on Coal—Commentary as used at Paris Gas Works.

Products	Percentage	Heating Value	Total
Coke	65.66%	12625 B. T. U.	829529 B. T. U.
Tar	7.51	15835 "	118919 "
Gas	17.09	20000 "	341797 "
Liquor	9.36	nil	.....
Total	99.62%	....	1.290245 "
Coal	100.00%	13362	1.336194 "
Difference			.45949 "

Gives for heat of reaction 459.5 B. T. U. per pound.

Reference No. 2

N. Euchène.—Compte Rendu—Tenth International Gas Congress, Paris, 1900, p. 239. Thermic Balance on Coal. B. T. U. per pound.

Coal	A	B	C
Percentage of volatile matter,—ash and moisture free	33.48	36.42	40.66
Absorbed by decomposition of coal	408.7 B.T.U.	415.7 B.T.U.	450.0 B.T.U.
Absorbed by formation of compounds	41.1 "	45.8 "	51.6 "
Total absorbed	449.8 "	461.5 "	501.6 "
Liberated by formation of compounds	472.1 "	526.4 "	616.4 "
Heat of reaction	−22.3 "	−64.9 "	−114.8 "

Reference No 3

Constam and Schlapfer.—Journal für Gasbeleuchtung, September 1, 1906, p. 741; September 8, 1906, p. 774. Thermic Balance on Coal. B. T. U. per Pound.

Coal A.—25.45% Vol.

	Percentage formed	B. T. U. Pound	Total B. T. U.
Coke	77.60	13868	10760
Gas	13.68	18394	2516
Tar	4.81	13738	661
Pitch	.71	14017	99
Liquor	3.20	.....	———
Total			14036
Coal	100.	14472	14472
Difference			−436 B.T.U.

Coal B.—38.83% Vol.

	Percentage formed	B. T. U. Pound	Total B. T. U.
Coke	68.14	12973	8840
Gas	15.99	17255	2759
Tar	6.47	13491	779
Pitch	1.46	14657	214
Liquor	7.84	.....	———
Total			12592
Coal	100.	13381	13381
Difference			−779 B.T.U.

Reference No. 4

D. D. Barnum.—Progressive Age, April 2, 1906, p. 211. Copied after Euchène's experiments.

Heat Liberated

By coke	215,623 B. T. U.
By formation of compounds	37,992
Total heat liberated	253,615

Heat Absorbed

By flue gases	120798 B. T. U.	47.0%
By gaseous vapors	23332	9.2%
By coke	33708	13.3%
By ash	.....	.0
By radiation	20931	8.3
By formation temp.	3267	1.3
By decomposition	51579	20.3
Total heat absorbed	253615	100.

He finds heat of reaction to be + 168.54 B. T. U. per pound.

Reference No. 5

Variation of Loss in Distillation of Coal with Varying Volatile Constituents.

Constam & Kolbe.—Journal für Gasbeleuchtung, July 25, 1908, p. 669, et seq.

	Gardanne	Pyrenäen-kohle	Blanzy	Levy	Grand Combe
Volatile in Coal	49.4	42.9	34.6	28.0	20.2
Hydrogen	5.06	5.30	5.48	5.06	4.69
Oxygen	14.00	9.14	10.26	4.90	3.56
Heating Value	12.970	14.100	14.670	15.520	15.290
Percentage in Coke	55.6	58.8	60.2	68.9	76.0
" " Gas	27.2	23.1	24.4	20.6	17.4
" " Tar	7.0	8.3	8.3	4.5	3.5
" " Pitch	3.0	3.12	2.3	2.3	.5
" " Loss	7.2	6.68	4.8	3.7	2.6

Reference No. 6

Heat Balance with a Regenerative Bench. Per 100 Lbs. of Coal Carbonized

Heat Produced

By combustion of coke	180553	B. T. U.
By formation of volatile compounds	52637	"
Total heat evolved	233190	"

Heat Absorbed

As sensible and latent heat of flue gases	58734	B. T. U.
As sensible heat of gaseous vapors	32166	"
As sensible heat of coke	43148	"
As sensible heat of clinker	1863	"
By radiation	48276	"
By formation of volatile compounds	3517	"
By decomposition of coal	45486	"
Total heat absorbed	233190	"

Reference No. 7

Percentage Distribution of Heat Losses.

By flue gases	25.20%	
By volatile compounds	13.80	
By coke	18.50	
		57.50%
By radiation	20.70	
By formation of volatile compounds	1.50	
By decomposition of coal	19.50	
By clinker	.80	
		42.50%

REFERENCE No. 8

Proximate and Ultimate Analyses of Gas Coals

State	Penna.	W. Virginia	Kentucky	Ohio	Ind. Ter.
Coal	Pittsburg	Fairmont	Straight Creek	Hocking Valley	Hartshorn
Moisture	1.07	1.35	1.92	6.72	3.87
Volatile matter	39.24	36.92	36.56	37.13	35.73
Fixed carbon	50.92	55.36	57.08	50.32	50.05
Ash	8.77	6.37	4.44	5.83	10.35
Carbon	82.47	78.31	78.31	69.42	69.85
Hydrogen	6.01	5.26	5.36	5.35	5.14
Oxygen	6.81	7.61	8.80	16.27	11.38
Nitrogen	1.88	1.55	1.85	1.46	1.29
Sulphur	2.83	.90	1.24	1.67	1.99
Heating value	15353	14164	14319	12388	12620
	B	C	C	A	C

A. Lord & Haas.—Am. Soc. Mining Eng., Chicago, February 1897.

B. Hale & Williams.—Trans. Am. Soc. Mech. Eng., N. Y., December 1898.

C. Report of Fuel Testing Plant, St. Louis, U. S. G. S., 1906, Part I.

REFERENCE No. 9

Composition of Coke

	German	English	French	American
Carbon	84.76	90.75	84.35	81.34
Hydrogen	.90	.45	.67	.57
Oxygen	.34	1.50	1.35	2.40
Nitrogen	1.38	1.20	.40	.89
Sulphur	.93	.60	1.06	1.04
Ash	9.42	5.50	12.17	13.76
Moisture	2.27			

REFERENCE No. 10

Composition of Coal Tar

	Average	Hydraulic	Scrubber	Condenser	Holder
Carbon	84.91	90.186	89.91	87.222	85.183
Hydrogen	9.65	4.848	4.945	5.499	5.599
Oxygen	3.50	4.966	6.279	6.279	9.218
Nitrogen	1.60				
Sulphur	.34				
	B	C	C	C	C

B. Jnl. für Gasbeleuchtung, August 4, 1906, p. 669, Bornstein.

C. Mahler.—Bulletin à la Société à Encouragement pour l'Industrie Nationale 1892, P. 319.

Reference No. 11

Compositions of Illuminants in Coal Gas.

	Bunsen	Fisher	Berthelot
Benzol	1.33	.69	3.00000
Ethylene	2.55	2.11	.20000
Propylene	1.21	.37	.00025
Acetylene			.10000
Allylene			.00080
Crotonylene			.00310
Diacetyle			.00015
Terene			.00042
Mis. Carburets			.00083

Reference No. 11A

Composition of Illuminants Frozen out of Gas.
Experiments made at La Villette Works at Paris.

	Dull Red Heat	Bright Red Heat
Benzol in gas	.69%	1.12%
Fraction 176°—203° F.	39.76	57.60
203 —221	28.10	20.90
221 —284	27.10	19.80
Above 284° F.	5.04	1.70

Reference No. 11B

Illuminants from Coke Oven Gas.

Candle Power, 18.1 Ills., .021 Gallons per M.

	Distillation
Benzol	22.3%
Toluene	31.2%
Xylene	18.6%
Residue	26.5%

Reference No. 12

Coal Gas Analyses.

	Horizontal Retorts		Vertical Retorts	Coke Ovens	Carbonizing Chambers
Ill., $C_n H_{2n}$	4.05		4.10	2.95	
Carbon monoxide	8.50		6.80	6.25	
Hydrogen	48.60		46.22	43.55	
Methane	29.20	33.00	34.82	33.45	35.60
Ethane	3.80			2.15	
Carbon dioxide	1.50		2.60	2.20	
Oxygen	.55		.70	.85	
Nitrogen	3.90		4.26	8.60	

Reference No. 13

Composition of Coal Gas by Weight.

	Horizontal		Vertical	Coke Ovens	
Illuminants	9.74		10.00	5.75	
Carbon monoxide	19.35		15.61	11.54	
Hydrogen	7.91		7.60	5.77	
Methane	38.00	47.30	45.75	35.26	52.88
Ethane	9.30			17.62	
Carbon dioxide	5.39		9.40	6.40	
Oxygen	1.45		1.83	1.81	
Nitrogen	8.92		9.87	15.83	

Reference No. 14

Elementary Composition of Coal Gas

	Horizontal	Vertical	Coke Ovens	French Hor.	English Hor.
Carbon	53.67	51.77	51.95	57.09	58.62
Hydrogen	21.04	20.86	19.15	19.45	22.37
Oxygen	16.43	17.56	13.05	19.65	15.34
Nitrogen	8.92	9.81	15.83	3.81	3.65
	a	a	a	b	c

a. U. G. I. Companies' Records.
b. Euchène Compte Rendu, 10th Inter. Gas Congress, Paris, 1900, p. 239.
c. London Journal, March 1879, p. 399.

Reference No. 15

Ammonia Liquor.

$NH_3 = 2.5\%$		Average
$NH_3\,HCO_3$	=	6.51%
$(NH_3)_2\,CO_3$	=	1.49
$(NH_3)_2\,S$	=	.49
$(NH_3)_2\,SO_4$	=	.32
$NH_4\,Cl$	=	2.03
$NH_4\,SCN$	=	.21
$(NH_4)_2\,S_2$	=	.17
$(NH_4)_2\,Fe\,CN_6$	=	trace
		11.22

Reference No. 16

Average Concentrated Ammonia Liquor.

		Equivalent to	
Ammonia sulphide	8.7%	NH_3	15.79%
Neutral ammonia carbonate	29.2	S_2	4.11
Acid ammonia carbonate	.0	CO_2	13.38
Ammonia hydrate	2.22		

Reference No. 17

Euchène.—Compte Rendu, 10th Inter. Gas Congress, Paris, 1900, Table 5.

Distribution of Components of Coal by Distillation.

	Coal	Coke	Tar	Gas	Liquor
Ash	8.18	8.18			
Moisture	4.34				4.340
Carbon	72.08	56.453	5.418	10.209	
Hydrogen	4.78	.446	.378	3.481	.475
Oxygen	8.73	.909	.504	3.516	3.800
Nitrogen	.87	.271	.042	.374	.183
Sulphur	1.02	.712		.308	
Totals	100.	67.071	6.342	17.888	8.799

Reference No. 17A

General Distribution of Products.
From 100 lbs. of Coal.

	Horizontal	Vertical	Coke Ovens	Munich Chambers
Coal	Yough.	Westphal.	Dominion	Saar
Volatiles	34.8%	26.1%	34.6%	31.2%
Coke	68.6 lbs.	71.0 lbs.	71.13lbs.	67.88 lbs.
Gas	18.4	16.3	16.43	15.60
Tar	7.8	4.58	3.38	6.19
Ammonia	.229	.326	.34	.239

Reference No. 18

Composition of Gases in Coal at Ordinary Temperatures.

	Newcastle	Newcastle	Durham
Methane	6.52	26.54	84.04
Carbon dioxide	5.55	8.54	1.35
Oxygen	2.28	2.95	.19
Nitrogen	85.65	61.97	14.62

Reference No. 19

Composition of Gases Evolved on Boiling Coal in Water.

Illuminants	7.7	....
Methane	20.4	22.3
Carbon dioxide	16.9	22.4
Oxygen	1.7	4.1
Nitrogen	53.2	48.0

Reference No. 20A

Effect of Heat on Composition of Gases.

Porter & Ovitz, A. G. L. J., Sept. 14, 1908, p. 447, Ill. Coal.

Temp.	930°	1110°	1290°	1470°	1650°	1830°	2010°
Yield	.21	.86	1.56	2.48	3.75	4.32	4.99
$C_6 H_6$		2.5	2.3	1.5	1.6	1.2	1.0
$C_2 H_4$	5.6	1.8	1.3	1.5	1.4	2.4	2.7
C O	13.3	13.8	19.0	15.7	14.5	14.4	14.9
H_2		14.1	23.9	38.5	48.7	52.6	54.6
$C H_4$	16.4	34.1	29.9	27.1	15.7	18.1	13.9
$C_2 H_6$	14.8	13.5	7.6	4.9	5.9	3.9	4.2
$C O_2$	20.0	6.7	5.6	3.5	2.4	2.5	1.7
N_2	28.9	13.4	10.2	7.2	4.9	4.9	6.0

Reference No. 20B

Starting Point of Distillation.

Maisilly

150° – 300° F. non-inflammable gas.
300° – 360° F. light-blue flame.
360° – 480° F. illuminating flame.
480° – 662° F. illuminating flame.

a.

Letheby

Up to 700° F. but little change.
Up to 773° F. carbon monoxide.
Up to 980° F. oils.
Up to 1500° F. high c. p. gas.
Up to 1800° F. low c. p. gas.

b.

a. London Journal of Gas Lighting, May 27, 1884, p. 915.
b. London Journal of Gas Lighting, June 27, 1885, p. 507.

Reference No. 21

Journal für Gasbeleuchtung, Aug. 4, 1906, p. 668.

Bornstein	Westphalian Zollverein
Water appeared	390° F.
Freely distilled	550° F.
First oily distillate	455° F.
Beginning of true distillation	700° F.
First combustible gas	745° F.
Copious evolution of gas	750° F.
Appearance of sulphur compounds	580° F.

Reference No. 22

Effect of Size of Coal.

London Journal, Aug. 6, 1901, p. 340. M. Verdier.

Newcastle Coal No. 1.

	Large	Medium	Small	Dust	Large	Medium	Small	Dust
Yield	5.24	5.21	5.16	5.04	5.31	5.28	5.15	5.02
C. P.	13.8	13.3	12.5	11.8	13.6	13.5	12.9	11.6
C. F.	72.4	69.4	64.5	59.5	72.2	71.4	66.5	58.2
Ill.	3.85	3.65	3.20	2.85	3.61	3.27	2.70	2.45
CO.	6.63	6.83	6.90	6.90	6.72	6.27	6.90	6.80
H_2	53.20	53.70	54 10	54.90	54.60	53.35	56.10	56.65
CH_4+N_2	35.30	34.70	34.50	33.60	33.91	34.04	33.16	33.15
CO_2	.92	.95	1.10	1.05	.90	.90	1.10	1.00
Size	2.2—6.6	1¼—3½	⅜″ Screen	Dust	Same			

To be noted, the make varied but little. C. P. and C. F. varied with size. Consider that it is caused by more complete contact and decomposition of hydrocarbon with the hot coke.

Reference No. 23

Variation of products of carbonization with composition of coal.

Constam & Kolbe.—Journal für Gasbeleuchtung, July 25, 1908, p. 669, et seq.

Composition. Water and Ash Free	Gardanne	Chapelle	Pyrenäen	Bruay	Lt. Etienne	Roucham
Carbon	73.31	79.60	77.75	83.34	87.40	88.71
Hydrogen	5.06	5.40	5.30	5.32	5.18	4.98
Oxygen	14.00	11.60	9.14	8.77	5.02	4.06
Nitrogen	1.63	1.55	1.52	1.66	1.54	1.36
Sulphur	6.00	1.85	6.29	.91	.86	.89
Moisture	10.55	10.43	3.88	2.36	.94	.87
Volatiles	49.40	43.40	42.90	37.90	29.60	22.10
Ash	10.79	14.39	4.75	3.96	5.50	14.05
Heating Val.	12970	14080	14100	14725	15560	15600
Yield of coke	50.60	56.55	57.15	62.10	70.35	77.90
Gas	25.60	20.85	21.45	20.95	16.20	14.80
Tar	6.55	6.02	9.50	10.90	9.10	6.40
Liquor	17.25	16.58	11.90	6.05	4.35	.90
Ills.	4.75	6.47	6.40	4.60	4.07	3.90
CO	18.42	15.21	15.70	15.50	5.97	6.85
H_2	42.53	46.06	44.80	48.62	48.90	60.45
CH_4	20.70	23.61	24.30	22.57	31.33	23.87
CO_2	9.47	5.37	5.13	3.43	2.07	1.90
O_2	.38	.67	.43	1.02	.73	.50
N	3.85	2.62	3.17	4.22	6.97	2.52

Reference No. 24

Variation of Products of Carbonization with Composition of Coal.

L. J.—March 15, 1887, p. 491. Experiments made at La Villette, 1878–1884.

Coals	Class I	II	III	IV	V
Carbon	88.38	86.97	85.89	83.37	81.66
Hydrogen	5.06	5.37	5.40	5.53	5.64
Oxygen	5.56	6.66	7.71	10.10	11.70
Nitrogen	1.00	1.00	1.00	1.00	1.00
Moisture	2.17	2.70	3.31	4.34	6.17
Volatiles	26.82	31.59	33.80	37.34	39.27
Coke	73.18	68.41	66.20	62.66	60.73
Ash% Coal	9.04	7.06	7.21	8.18	10.73
Ash% Coke	12.35	10.32	10.80	13.05	17.67
Percentage by Weight of Different Products.					
Gas	13.70	15.08	15.81	16.95	17.00
Coke	71.48	67.63	64.90	60.88	58.00
Breeze	6.33	7.07	7.41	8.08	9.36
Tar	3.90	4.65	5.08	5.48	5.59
Ammonia	4.59	5.57	6.80	8.61	9.86
	100	100	100	100	100
$C_6 H_6$	.79	.99	.96	1.04	.88
$C_2 H_4$	2.48	3.02	3.98	4.44	4.76
CO	6.68	7.19	8.21	9.86	11.93
H_2	54.21	52.79	50.10	45.45	42.26
CH_4	32.31	32.43	33.03	34.42	35.14
CO_2	1.47	1.58	1.72	2.79	3.13
N_2	2.00	2.00	2.00	2.00	2.00
Sp. Gravity	.352	.376	.399	.441	.482
C. P.	10.3	12.1	12.9	13.0	13.1

Reference No. 25A

Variation in Rate of Gas Evolution During Carbonization. Considering the carbonizing period divided into 4 parts.

Method of Carbonization	Average horizontal 4 hr.	Vertical	Coke Ovens	Munich Chamber
1st	43.3%	31.4	28.3	33.6
2nd	31.5	28.0	28.5	27.3
3rd	18.7	24.5	28.6	25.3
4th	6.5	6.1	14.6	13.8

REFERENCE NO. 25B

Variation in Gas Composition during Carbonization in Horizontal Retorts.

4 hours

Youghiogheny Coal, V. F. Dewey, A. G. L. J. Vol. 81, p. 563.

Time	Ills.	CO	H_2	CH_4	CO_2	O_2	N_2
1 hr.	8.0	8.5	31.3	46.3	.8	.1	4.6
2 "	6.9	8.3	34.2	44.2	.9	.2	4.8
3 "	3.1	8.0	51.5	30.2	.8	.0	6.0
4 "	.0	10.2	67.6	6.0	.4	.0	15.8
Avg.	5.6	8.4	40.2	38.5	.8	.1	6.0

REFERENCE NO. 26

Saar Coal, Bunte Committee Report.

4 hours

						O_2 N_2
1/2	8.2	9.0	33.7	40.3	3.5	5.3
1	5.3	8.7	33.7	41.3	3.2	7.8
2	3.4	8.3	47.6	30.3	3.0	7.4
3	4.0	8.0	54.0	27.7	2.0	4.3
4	.8	7.5	62.6	21.5	1.6	6.0
Avg.	4.3	8.6	48.6	32.8	2.1	3.6

REFERENCE NO. 27

English Derbyshire Coal, A. G. L. J., December 16, 1907.

5 hours

						O_2	N_2
1/2	8.7	4.3	29.8	49.7	3.0	.0	.7
1½	5.2	5.0	37.5	42.0	2.8	.0	4.4
2½	3.6	4.9	42.2	39.4	2.6	.0	4.5
3½	2.4	4.5	46.2	37.5	2.3	.0	5.0
5	.0	3.8	60.8	26.3	1.7	.0	6.2

REFERENCE NO. 28

Yorkshire Coal, L. T. Wright, Lon. Jnl., March 25, 1884. p. 535.

6 hours

						$O_2 + N_2$
10′	10.62	6.19	20.10	57.38	2.21	2.20
1 hr. 30′	5.98	5.68	38.33	44.03	2.09	2.47
3 " 25′	3.04	6.21	52.68	33.54	1.49	2.55
5 " 35′	1.79	6.12	67.12	22.58	1.50	7.80

Reference No. 29

Youghiogheny Coal, V. F. Dewey, A. G. L. J., V. 81, p. 563.

7 hours

						O_2	N_2
1	11.4	6.1	16.1	59.8	1.6	.3	3.9
2	7.2	6.9	30.8	48.3	1.0	.4	4.4
3	5.1	6.6	40.2	42.8	.8	.3	3.5
4	3.9	6.4	41.0	39.9	.9	.3	6.5
5	1.6	5.7	52.8	32.5	.6	.2	6.4
6	.1	4.4	74.2	10.7	.6	.1	9.7
7	.0	5.4	72.5	7.1	.3	.1	14.4
Avg.	4.8	6.0	41.6	39.4	.9	.3	6.2

Reference No. 30

Variation of Gas Composition During Carbonization in Vertical Retorts.

Lincoln.—U. G. I. Co. records.

	Ill.	CO	H_2	CH_4	CO_2	O_2	N_2
1 hr.	7.5	7.2	26.2	48.6	6.1	1.3	1.6
2 "	6.0	6.6	35.9	43.2	4.8	1.7	2.9
4 "	4.4	6.2	42.8	36.3	5.9	1.7	3.8
6 "	2.6	5.9	47.5	28.4	3.4	1.7	8.5
8 "	.2	6.3	58.8	18.6	2.7	1.7	11.7

Reference No. 31

Variation of Gas Compositions during Carbonization in Coke Ovens. Dominion Coal, Dr. Schniewind, Eng. Congress at Glasgow, 1907.

		Ill.	CO	H_2	CH_4	CO_2	O_2	N_2
1st hour		5.8	6.8	34.3	40.3	3.9	.2	8.7
Avg. next	4—5	5.7	6.3	34.1	41.5	3.9	.4	8.1
	—9	5.3	5.8	38.2	39.2	3.5	.3	7.7
	—13	4.8	6.1	41.7	36.8	3.3	.3	7.0
	—17	4.2	6.3	42.3	35.2	3.3	.4	8.4
	—21	3.5	6.5	43.1	35.1	3.0	.4	8.3
	—25	2.6	6.0	47.9	32.9	2.3	.3	8.0
	—29	1.1	5.4	61.2	21.4	1.4	.3	9.1
	—33	.5	6.1	66.3	12.8	.8	.2	14.4
Last hour	34	.2	6.4	66.7	9.6	1.3	.2	15.6

Reference No. 32

Variations in Gas Compositions during Carbonization in Coke Ovens.

Durham Coal, London Jnl., July 9, 1907, p. 99.

	Ills.	CO	H_2	CH_4	CO_2	O_2	N_2
1 hr.	5.6	5.4	39.2	41.1	1.4	.8	6.5
6 "	5.0	4.9	44.8	36.1	2.2	.8	6.2
11 "	3.4	4.3	47.9	34.1	1.4	.7	8.2
16 "	1.4	4.4	54.5	29.8	1.0	.2	8.7
21 "	.2	4.6	62.6	23.0	1.0	.2	8.4
26 "	.0	9.2	59.2	4.0	1.4	.4	25.8
Avg.	3.8	5.0	51.5	28.4	1.8	.6	8.9

Reference No. 33

Variation of Candle-Power during Carbonization

Method of carbonization Kind of coal used	Horizontal 4 hr. Pittsburgh	Verticals Westphalian	Coke Oven Dominion	Munich Chamber Saar
Yield,	5.14	4.96	4.64	4.97
Avge. C. P.	13.41	10.1	11.82	10.00
C.P. at fraction of time				
Start	....	17.4	18.4	26.4
1/8	19.6	13.6	15.4	13.0
1/4	17.1	13.1	13.5	9.8
3/8	15.7	10.8	13.0	10.8
1/2	12.6	9.1	11.9	10.6
5/8	10.8	7.7	10.5	8.2
3/4	6.9	6.6	8.0	3.9
7/8	2.9	....	3.7	1.0
End of Carbonization	1.5	....	2.5	....

Reference No. 34

Variation in Heating Value during Carbonization

Method of carbon'n Coal	Horizontals Youghiogheny	Verticals New Elverson	C. Ovens Dominion	M. chambers Saar
Avge. heating value	600	594	530	660 BTU
Start	700	806	707	968
1/8	790	720	709	731
1/4	680	640	671	675
3/8	650	635	662	664
1/2	610	627	642	641
5/8	600	608	624	596
3/4	550	565	556	562
7/8	510	460	440	482
End of charge	420	390	362	438

Reference No. 35

Variation in Ammonia during Carbonization

Coal	Horizontal Retorts Farmington ¾	Vertical Retorts Westphalian
Ammonia grains p. 100 cu. ft.	345 grains	546 grains
⅛	345	560
¼	365	603
⅜	270	430
½	210	362
⅝	185	273
¾	170	236
⅞	150	173
Finish	135	

Reference No. 36A

Effect of Heat on Sulphur Compounds and Ammonia.

L. J. Wright L. J. Feb. 14, 1888, p. 281. Yorkshire Coal in Through Retorts. Coal Contained 1.28% of Nitrogen, 1.97% Sulphur.

Yield	Grains Sulphur Comp. per 100 cu. ft.	Ammonia Lbs. per Ton
5.19	44.17	6.52
4.81	36.93	7.08
4.21	26.75	6.70
3.74	19.16	5.71
3.08	13.91	

Reference No. 36

Variations of Hydrogen Sulphide during Carbonization.

Horizontal Retorts.

Length of Charge Coal H_2S gram P. 100 cu. ft.	4 Hours	4 Hours American	4 Hours	5 Hours English
1st	490	475	820	2400
2d	500	450	896	1950
3d	490	360	309	1767
4th	430	280	70	1325
5th				757

Reference No. 37

Berthelot Theory on Decomposition of Hydrocarbons.

Methane	$2\,CH_4$	=	$C_2\,H_6$	+	H_2	(a)
	$2\,CH_4$	=	$C_2\,H_2$	+	$3\,H_2$	(b)
Ethane	$C_2\,H_6$	=	$C_2\,H_4$	+	H_2	(a)
	$2\,C_2\,H_6$	=	$C_2\,H_2$	+	$2\,CH_4 + H_2$	(b)
Ethylene	$C_2\,H_4$	=	$C_2\,H_2$	+	H_2	(a)
	$2\,C_2\,H_4$	=	$C_2\,H_2$	+	$C_2\,H_6$	(b)

He considers the equations (b) are the most probable.

Reference No. 38

Berthelot on Polymerization of Hydrocarbons.

Benzol	$3\,C_2\,H_2 = C_6\,H_6$
Naphthalene	$C_6\,H_6 + 2C_2\,H_2 = C_{10}\,H_8 + H_2$
Anthracene	$2\,C_6\,H_6 + C_2\,H_2 = C_{12}\,H_{14} + 2\,H_2$

Reference No. 39

Lewes' Experiments on Decomposition of Hydrocarbons. London Journal, February, 1894, p. 330, 381, 436.

Gases were passed through platinum tube .078 inches diameter at .61 cubic inches per minute.

	Temperature—No Decomposition Up To			
	1650°	1830°	2190°	2730°
Olefines + $C_2\,H_4$	34.0	17.4	6.9	.4
Acetylene	.8	.6	3.6	.0
Paraffin + CH_4	59.7	76.5	55.3	27.8
Hydrogen	.0	.0	25.1	62.7
Carbon gr. per 100 cu. in. gas	.0	.0	.41	large quantity
Oil do	.036	.072	.057	.0

Reference No. 40

Decomposition of Ethylene flowing at rate of .25 cu. in. per minute:

	Temperature		
	1470°	1830°	2190°
Olefine + $C_2\,H_4$	91.90	45.31	18.31
Paraffin + CH_4	2.23	30.11	28.57
Hydrogen	3.26	19.65	49.51
Carbon monoxide	1.11	1.23	1.10
Carbon gr. per 100 cu.in.	trace	.15	3.15
Oil do	.18	.86	.005

REFERENCE NO. 41

Decomposition of Ethane.

	Temperature			
	1650°	1830°	2190°	2730°
$C_n H_{2n}$	31.0	28.4	11.6	1.7
$C_2 H_2$	trace	.30	1.8	.9
$C_n H_{2n+2}$	12.8	8.3	3.9	.0
H_2	40.6	46.0	57.5	73.4
CH_4	12.0	12.7	21.9	20.6
Carbon gr. per 100 cu. in.	.0	.0	.19	.47
Oil do	.0	trace	trace	.0

REFERENCE NO. 42

Decomposition of Hydrogen + 5.3% Benzol.

	Temperature		
	1650°	2010°	2370°
Benzol + Olefine	5.00	3.33	2.35
Acetylene	.00	trace	.083
Methane + $C_n H_{2n+2}$	.00	2.87	5.02
Hydrogen	95.0	93.80	92.47
Carbon gr. per 100 cu. in.	trace	trace	.15
Oil do	trace	.18	.00

REFERENCE NO. 43

Composition of Hydrocarbons in Oil Gas.

Armstrong & Miller, Trans. Chemical Society (1886) Vol. 39, p. 74.

They found only traces of paraffin.

Considerable quantity of pseudo-olefines $C_n H_{2n}$ (saturated).

Considerable quantity of ethylene, propylene, amylene, hexylene and heptylene.

Pseudo acetylenes, crotonylene.

About 50 to 60% of benzol toluene and amylene.

Dimethyl benzine and trumethyl benzine.

Naphthalene and pseudo cumene.

The hydrocarbon oil was saturated with methyallene.

Reference No. 44

Haber – Hexane.

$$C_6\ H_{14} = CH_4 + C_5\ H_{10}$$
$$C_6\ H_{14} = CH_4 + C_2\ H_4 + C_3\ H_6$$

	1120°	1350°	1500°	2200°
Olefine	50.1	51.4	44.7	4.4
Paraffin	37.2	34.1	36.7	22.6
Hydrogen	10.6	13.1	11.8	65.2
CO	.46	.6	1.4	6.0
CO_2	1.64	.2	.2	.7

Reference No. 45

Decomposition of Hydrocarbons by Heat.

Bone & Coward, London Journal, Aug. 4, 1908, p. 319.

	Methane: Temperature		
	1470° F.	1860° F.	2100°F.
Per cent. decomposed	4.4%	35.0%	83.3%
Methane	91.6	48.2	9.15
Hydrogen	8.4	51.8	90.85
Acetylene	nil	nil	nil

When the tube was packed with quicklime, 96% of the gas was decomposed at 1830° F. in 25 minutes.

Reference No. 46

Decomposition of Ethane.

Temperature, 1250° F.

	Time in Hours			
Ratio of initial to final temperature	½	1½	3	6
	1.47	1.70	1.80	1.87
Ethane	34.7	9.8	7.3	2.0
Methane	8.4	19.9	32.9	54.5
Ethylene	24.7	24.1	16.4	.7
Hydrogen	28.1	41.1	40.6	40.9
Acetylene	4.1	5.1	2.8	1.9

About 45% of the carbon was deposited.

About 4% of the weight of original gas was found as naphthalene.

Reference No. 47

Decomposition of Ethane.

Temperature 1470° F.

	Time in Minutes				
	1	5	15	30	60
Ethane	17.90	2.40	nil	nil	nil
Methane	31.30	54.55	64.65	66.0	63.75
Ethylene	11.20	4.40	.75	nil	nil
Hydrogen	37.70	37.45	34.10	34.0	36.25
Acetylene	1.90	1.20	.50	trace	nil
Ratio CH_4 / H_2	.83	1.46	1.90	1.94	1.75

Condensible products, small amount; practically none.

Reference No. 48

Decomposition of Ethylene.

Temperature, 1070° F. Initial pressure, 365 mm.

Partial	Time in Minutes						
Pressures:	2	15	30	45	60	75	150
Ethylene	272.5	177.0	143.0	120.0	104.5	94.0	83.5
Acetylene	43.0	26.5	20.5	22.5	26.5	31.0	23.0
Ethane	12.8	28.7	29.7	29.4	27.3	24.0	9.9
Methane	16.1	54.6	67.5	77.1	90.0	95.6	132.8
Hydrogen	17.9	72.9	93.1	101.0	102.0	97.4	93.0
Tot. press.	362.5	359.0	354.0	351	350	342	342
Ratio CH_4 / H_2	.9	.75	.72	.76	.90	.98	1.43

Less than 1% of carbon deposited. Large formation of tarry vapors.

Reference No. 49

Decomposition of Ethylene.

Temperature, 1470° F.

	Time in Minutes			
	1	5	15	30
Ethylene	57.25	21.40	9.65	.9
Acetylene	3.00	3.90	3.85	nil
Ethane	3.25	5.00	1.30	nil
Methane	29.40	53.40	64.45	67.7
Hydrogen	7.10	17.00	20.75	21.4
Ratio CH_4 / H_2	4.14	3.1	3.1	2.1

More carbon was formed and less aromatic hydrocarbons than at 1070° F.

Reference No. 50

Decomposition of Acetylene.

	Temperature				
	1200° F.	1470°	1470°	1470°	1470°
Time in minutes		1	5	15	60
Acetylene	12%	25.90	7.3	13.5	nil
Ethylene	10.0	4.20	2.7	nil	nil
Ethane	1.3	2.65	.7	nil	nil
Methane	30.0	15.00	35.3	37.65	43.0
Hydrogen	46.7	52.25	54.0	61.00	57.0
Ratio CH_4/H_2	.64	.3	.65	.6	.75
Wt. acetylene	2.59 g				
Wt. polymerized products	1.56 g				
Wt. carbon	.55 g				

Reference No. 51

Equotations for Constant K.

$$C + 2\,H_4 \qquad CH_4$$

$$21.1 + \frac{18507}{T} - 5.9934 \ln T - .002936\,T = R \ln \frac{CH_4}{{}^{2}H_2}$$

$$CO_2 + CH_4 \qquad 2\,CO + 2\,H_2$$

$$-5.3 - \frac{19429}{T} + 9.5334 \ln T - .0002\,T = R \ln \frac{{}^{p^2}CO \times {}^{p^2}H_2}{{}^{p}CO_2 \times {}^{p}CH_4}$$

$$2\,CH_4 \qquad C_2H_2 + 3\,H_2$$

$$-\frac{80284}{T} + 12 \ln T \times 4.75 + .01\,T + 37.63 = R \ln \frac{{}^{p}C_2H_2 \; {}^{p^3}H_2}{{}^{p^2}CH_4}$$

Reference No. 52

Effect of Temperature on Elementary Composition of Gas.

T. Wills, London Journal, June 3, 1873, p. 508.

Temperature	Carbon	Hydrogen	Approximating
Dull red	614	100	
Red	580	100	Ethylene
Bright red	472	100	Ethylene + Methane
White	325	100	Methane
Continued white	7	100	Hydrogen + Carbon deposited

Reference No. 53

Effect of Carbonizing Temperature on Gas Formed.

L. J. Wright, London Journal, March 25, 1884, p. 535.

Heat	Yield	Candle Power	Cand. Feet	Ills.	CO	H_2	CH_4	N_2
Dull red	3.68	20.50	75.5	7.55	8.72	38.09	42.72	2.92
Bright red	4.33	17.80	72.2	5.83	12.50	43.77	34.50	3.40
Bright orange	5.35	15.60	83.5	4.51	13.96	48.02	30.70	2.81

Reference No. 54

Effect of Heat on Tar from Coal.

L. J. Wright, London Journal, February 14, 1888, p. 281.

Yorkshire Coal was used in Through Retorts.

	Percentage of Weight						
Yield	Sp.Gr. Tar	Ammonia Liquor	Naphtha	Light Oil	Creosote Oil	Anthracene Oil	Pitch
2.93	1.086	1.20	9.17	10.50	26.45	20.32	28.89
3.22	1.102	1.03	9.05	7.46	25.83	15.57	36.80
3.98	1.140	1.04	3.73	4.47	27.29	18.13	41.80
4.53	1.154	1.05	3.45	2.59	27.33	13.77	47.67
5.22	1.206	.38	1.00	.57	19.44	12.28	64.08

Reference No. 54A

Length of Charge and Tar.

L. J. Wright, London Journal, Feb. 14, 1888, p. 281.

Yorkshire Coal in Through Retorts.

Length of Charge	Sp. Gravity of Tar	Free Carbon in Tar
8th	1.084	8.69%
7th	1.103	11.92%
6th	1.149	15.53%
5th	1.204	24.67%

Reference No. 55

Effect of Heat on Benzol Homologues.

P. Ferko, London Journal, September 13, 1887, p. 493.

The hydrocarbons were vaporized and passed through a red hot iron tube. Products formed as percentage of hydrocarbon used.

	Benzol C_6H_6	Toluene C_7H_8	Styrolene C_8H_8	Naphthalene $C_{10}H_8$	Diphenyl $C_{12}H_{10}$	Anthracene $C_{14}H_{10}$	Phenanthrene $C_{14}H_{10}$	Oil ?
Benzol in Ethylene	6.0		1.3		22.6	1.1	.8	
Toluene alone	11.5	13.8	.5	3.1	2.1	.9	.1	.8
Toluene in Ethylene	15.3	12.2	.8	2.6	Dihapthyl	1.5		1.0
Naphthalene alone				55.3	15.3	Acenapthene		
Naphthalene in Ethylene				44.5	13.9	.05	.1	

Reference No. 56

Analyses of Dinsmore and Ordinary Tar

	Dinsmore	⅓ Dinsmore ⅔ Horizontal
Specific gravity	1.168	1.154
Free carbon	20.2% by wt.	20.90% by wt.
Water	1.956	2.766
Crude naphtha	1.265	4.675
Light oil	1.751	3.125
Creosote oil	30.728	30.444
Anthracene oil	16.480	16.450
Pitch	49.820	42.540
Fixed carbon in pitch	58.9	37.660

Analysis of Light Oils.

Specific gravity	.930		.920
Below 212° F.	4.0% by vol.		4.0% by vol.
212° – 248°	14.0		11.0
248° – 266°	16.0		14.0
266° – 302°	20.0		27.0
302° – 347°	18.0	302° – 356°	24.0
347° – 383°	14.0	356° – 365°	7.0
Residue	....		Naphthalene

Reference No. 57A

Distribution of the Nitrogen of the Coal in the Products of Carbonization.

London Journal, July 9, 1907, p. 99.

Nitrogen in coal, 1.57%.

In coke as N_2	.680%	=	43.31% of total
tar as N_2	.047	=	2.98
liquor as NH_3	.237	=	15.16
gas as NH_3	.001		
liquor as CN	.0035	=	1.43
gas as CN	.0183		
liquor as SCN	.0005		
In gas as N_2 + loss	.5827	=	37.12
	1.5700	=	100.00%

Reference No. 57B

London Journal, May 12, 1885, p. 862.

	Distribution of Nitrogen									
	Scotch Cannel		English Cannel		Yorkshire		Durham		Yorkshire	
Nitrogen as NH_3	.227	17.8	.192	11.6	.209	12.5	.251	15.4	.195	11.1
" as CN	.005	.4			.006	.4	.027	1.5	.004	.2
" as N-gas	.387	30.2	.593	35.7	.354	21.2	.610	35.3	.452	25.9
" as N-coke	.661	51.6	.875	52.7	1.101	65.9	.842	48.7	1.099	62.8
Total	1.280	100.	1.660	100.	1.670	100.	1.73	100.	1.750	100.
Pounds $(NH_4)_2$ SO_4 per ton	23.96 lbs.		20.27 lbs.		22.06 lbs.		26.40 lbs.		20.50 lbs.	

Reference No. 58

Composition of Ammonia Liquor from Different Parts of Coal Gas Plant.

F. Slocum, Western Gas Light Association, 1895.

	Hydraulic	1st Air Cond.	4th Air Cond.	1st Washer	2d Washer
Color:	Muddy	Clear	Brown	Clear	Clear
Gravity	1.011	1.035	1.120	1.022	1.010
Total NH_3 Oz. St.	6.1	16.2	58.0	16.5	8.3
Free NH_3 Oz. St.	2.7	15.9	57.4	16.1	8.1
Total NH_3 %	1.329	3.513	12.6	3.571	1.8
$(NH_4)_2$ S	.520	3.471	12.06	2.274	1.743
" CO_3	.805	4.834	17.323	6.446	2.418
" S_2O_3	.174	trace	1.093	.339	.193
" SO_4	.011	....	....	....	....
NH_4 SCN	.160	.013	....	.160	.039
" Cl	2.217	.170	.153	.126	.054
(" $)_2$ Fe CN_6	....	.041	.536	....	....

Reference No. 59A

Effect of Steam on Formation of Ammonia.
Percentage of Total Nitrogen as NH_3

	Time	Temperature 1110°	1290°	1470°	1650°
No steam	3 hours	10.83	19.17	21.38	20.57
Steam	6 "	13.04	20.85	23.12	23.84
"	9 "	3.17	8.53	9.64	5.35
"	12 "	1.84	5.10	6.12	2.21
"	15 "	.17	3.17	3.71	.00
"	18 "	.00	1.50	2.14	.00
"	21 "	.00	.00	1.12	.00

Reference No. 59B

Effect of Heat on Formation of Ammonia.
Moyer & Altmoyer, London Journal, April 2, 1907, p. 27-157.

	——Coal—— Heinitz—Saar		Percentages			
C	79.52	Temp.	N_2 in coke as NH_3		As N_2	elsewhere
H	4.78	1610°	72.4	10.6	5.13	11.87
O	7.75	1290	70.1	19.6	7.98	2.32
N	1.13	1470	65.2	21.7	9.43	3.67
S	.65	1650	62.1	20.8	15.61	1.49
Ash	4.31					
Moisture	1.86					

Reference No. 60

Distribution of Sulphur of Coal in Products of Carbonization.
London Journal, July 9, 1907, p. 99.

Total sulphur in coal = .824%

In coke	.598%	=	72.53% of total
tar	.012	=	1.45
In gas as H_2S	.153	=	24.00
Liquor as H_2S	.045		
Gas as CS_2	.009	=	1.72
Liquor SCN	.004		
Loss	.003	=	.30
	.824		100.00%

Reference No. 61

Relation of Sulphur in Coal and Coke to Hydrogen, Sulphide and Sulphur Compounds.

Coal	Sulphur in Coal	Sulphur in Coke	Hydrogen Sulphide in gas	Sulphur Compounds
Equality	6.76	2.27	2190	45.51
Marian	2.39	2.38	955	30.00
Montana	1.64	1.53	735	45.30
Cartersville	1.59	1.28	910	40.45
Gaston	1.35	1.15	702	65.23
Big Muddy	1.21	.82	340	17.42
Youghiogheny	1.01	.93	420	17.28
Farmington	.96	.84	400	18.64
McAllister	.94	.66	260	12.00

Reference No. 62

Effect of Varying Rates in Carbonizing the same quantity of Coal per Diem.

Weight of Charge	444 Lbs.	350 Lbs.	300 Lbs.	220 Lbs.
Time	6 hr.	4 hr. 48 m.	4 hr.	3 hr.
Yield	4.83	5.00	4.89	5.10
Candle power	12.10	12.56	13.07	13.70
Candle feet	58.5	62.8	64.0	69.8

Reference No. 63

Effect of Varying Seals on Carbonization.

J. H. Brown, London Journal, October 31, 1905, p. 307.

Derbyshire Coal.

	Yield	Candle Power	Cand. Feet	B.T.U.	% Coke	Gal. Tar	Lbs. NH_3	Free Carbon in Tar
No. 1, ½-in. seal, very light pressure	5.24	15.26	79.8	639	63.9	14.2	4.84	22.27
No. 2, 1½-in. do	5.42	14.76	79.7	617	60.3	12.2	5.23	32.25
No. 3, 3½-in. do	5.40	14.39	77.8	616	64.2	11.4	5.25	25.62
No. 4, 3½-in., heavy pressure	4.46	15.50	69.0	561	65.1	14.2	5.27	38.62

	Ill.	CO	H_2	CH_4	CO_2	O_2	N_2	H_2S	CS_2
No. 1	4.0	8.3	52.4	26.5	1.1	1.4	6.3	447	24.0
No. 2	2.9	8.4	52.1	28.3	1.2	1.4	5.7	447	11.6
No. 3	3.1	8.9	53.3	26.9	.9	1.1	5.8	575	21.4
No. 4	3.7	8.8	44.3	33.8	1.0	1.8	6.4	511	99.1

Reference No. 64

Effect of Different Charge in Different Retorts.

Verdier, London Journal, June 27, 1905, p. 955.

	D 16″ x 24″ x 10′			D 14″ x 24″ x 10′			14″ x 24″ x 10′		
Charge (pounds)	440	350	300	440	350	300	440	350	300
Yield	4.86	4.99	4.82	4.71	4.95	4.77	4.76	4.97	4.79
Candle power	12.00	12.50	13.45	12.55	12.72	13.65	12.20	12.47	13.57
Candle feet	53.8	62.4	64.8	59.1	63.0	65.1	58.1	62.1	65.1
Free carbon in hydraulic main tar, %	29.5	31.8	34.5	24.5	25.8	27.8	25.5	26.2	28.7

Reference No. 65

Effect of Varying Charge in Same Time in Same Retort.

	Time: 6 Hours			
Weight of charge	275 lbs.	330 lbs.	385 lbs.	440 lbs.
Yield	5.17	5.07	4.97	4.91
Candle power	12.57	12.67	12.65	12.61
Candle feet	65.0	64.3	62.9	62.0

Reference No. 66

Verdier & Teulon, London Journal, June 27, 1905, p. 955.

Tests Showed on English Coal.

	440 Lbs. In 6 Hours.	350 Lbs. In 4H. 48M.	300 Lbs. In 4 Hrs.
Gravity	1.295	1.321	1.360
Light oils	1.25	1.07	.80
Heavy oils	21.48	19.80	20.12
Pitch	75.50	77.70	78.24
Free carbon	29.97	32.35	35.55

Reference No. 67

Variations in Yield, Candle Power and Tar.

Watson Smith, London Journal of Gas Lighting, December 10, 1889, p. 1111.

Yield	4.16	4.31	4.43	4.55	4.65	4.78	4.82	4.87
C. P. Argand	29.06	26.78	27.70	15.71	15.16	15.13	14.92	14.51
Candle feet	121.0	115.2	122.6	71.5	70.5	72.3	71.9	70.7
Gals. of tar	11.6	15.9	12.6	13.5	....	8.7	11.2	8.0
Sp. gr. of tar	1.147	1.700	11.82	1.177	1.191	1.196	1.193	1.187
Light oil, gals. per ton	7.9	5.4	9.0	9.0	3.4	5.3	4.8	5.7
Heavy oil	24.1	24.1	17.1	32.1	6.0	17.1	16.6	14.6
Naphthalene, per cent.	3.15	4.13	3.94	4.00	4.67	5.32	5.39	3.53

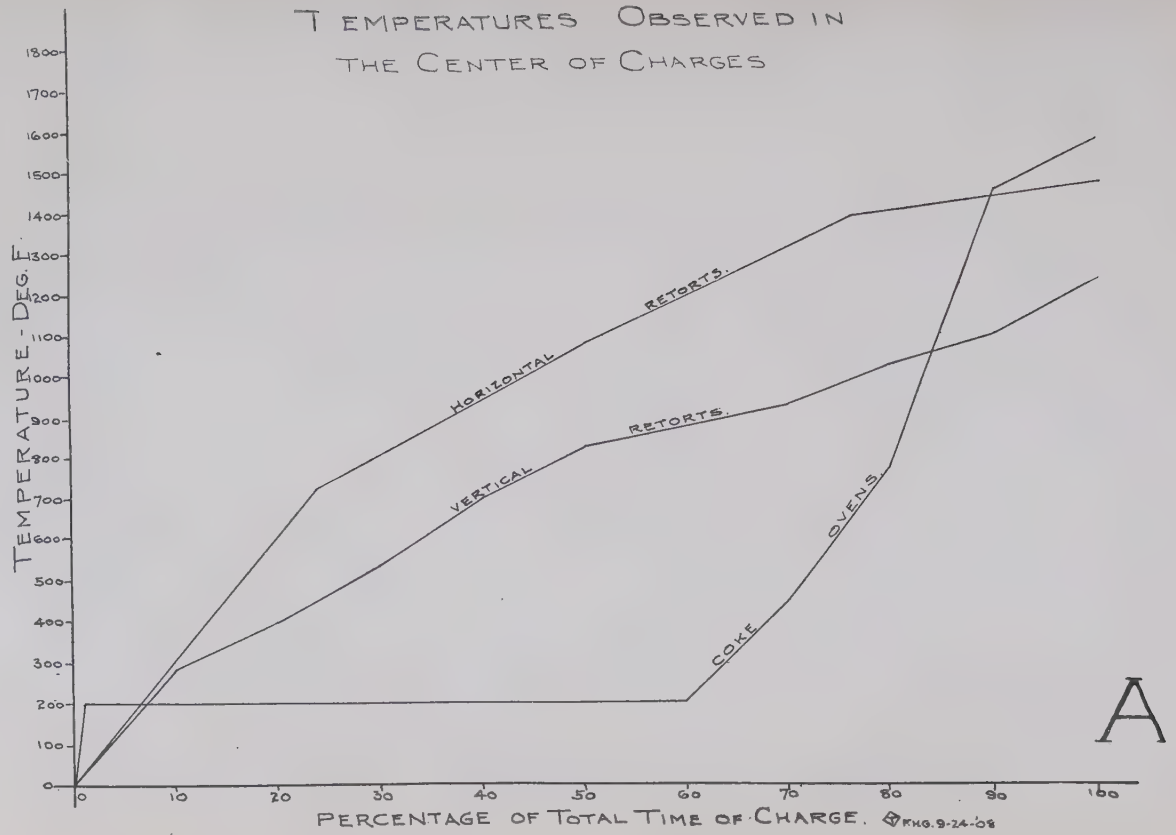
TEMPERATURES OBSERVED IN
THE CENTER OF CHARGES
TEMPERATURE - DEG. F.
1800
1700
1600
1500
1400
1300
1200
1100
1000
900
800
700
600
500
400
300
200
100
0
HORIZONTAL RETORTS.
VERTICAL RETORTS.
COKE OVENS.
0
10
20
30
40
50
60
70
80
90
100
PERCENTAGE OF TOTAL TIME OF CHARGE.
FKG. 9-24-08
A

TEMPERATURES OBSERVED IN CHARGE IN COKE OVENS

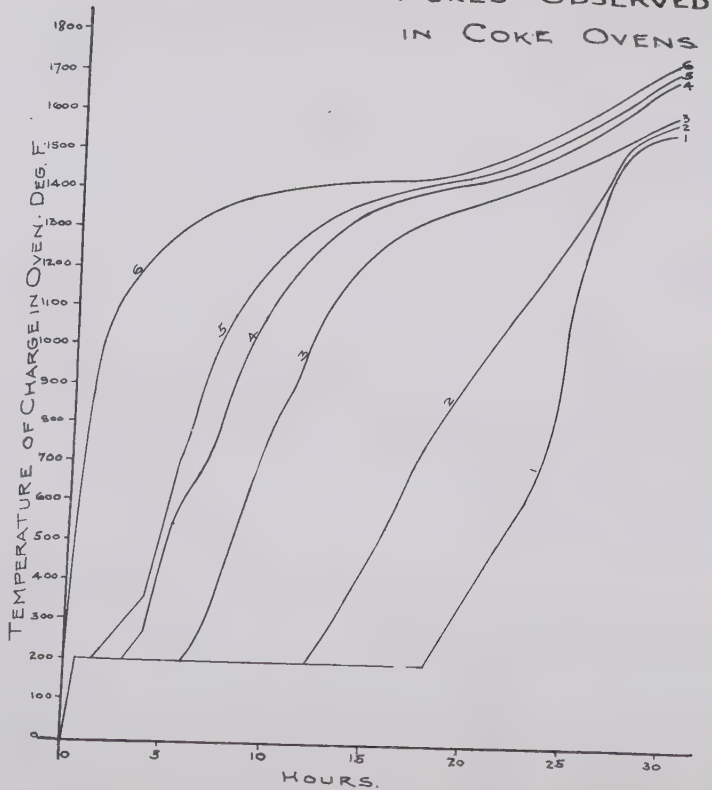

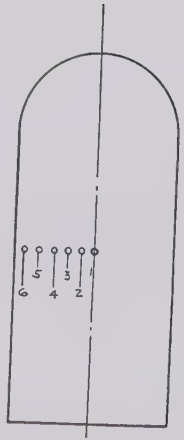

B

H. HILGENSTOCK - LON. JNL. GAS LTG. 10-28-02 P. 1147.

FHG-9-23-08

638

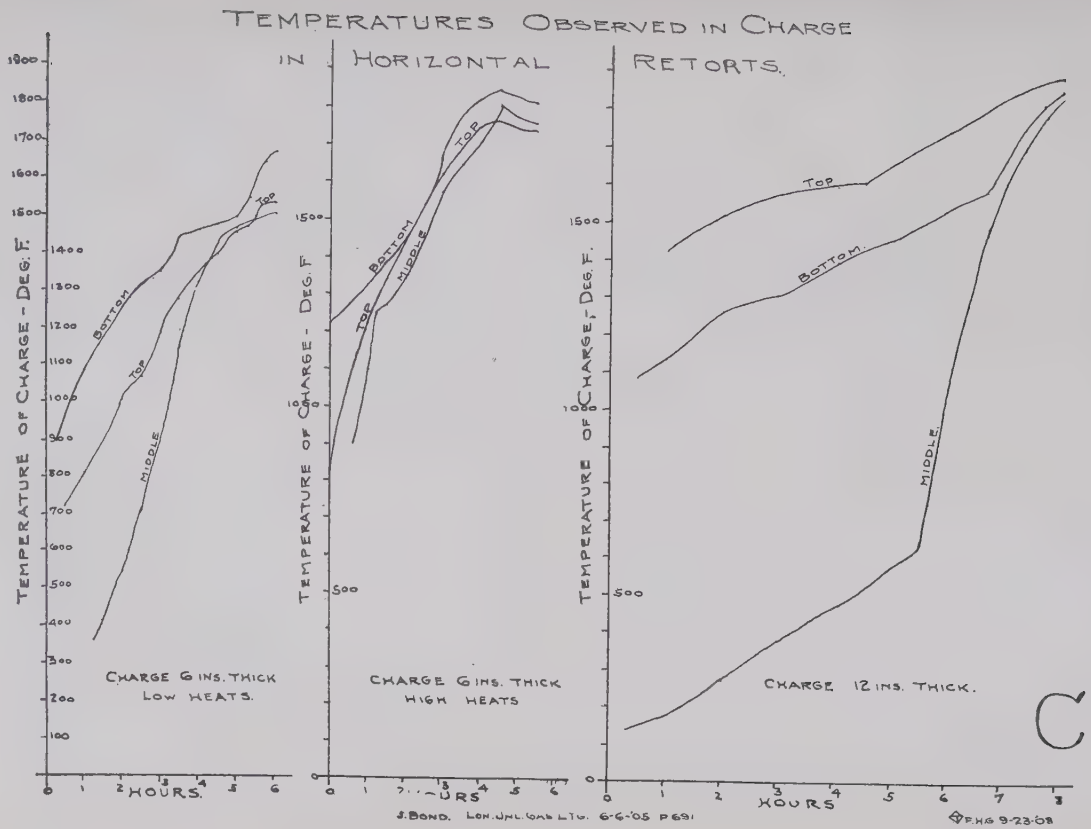
TEMPERATURES OBSERVED IN CHARGE IN HORIZONTAL RETORTS.
TEMPERATURE OF CHARGE - DEG. F.
BOTTOM
TOP
MIDDLE
CHARGE 6 INS. THICK LOW HEATS.
CHARGE 6 INS. THICK HIGH HEATS
CHARGE 12 INS. THICK.
HOURS.
C
S. BOND. LON. JNL. GAS LTG. 6-6-'05 P 691
F.H.G 9-23-'08

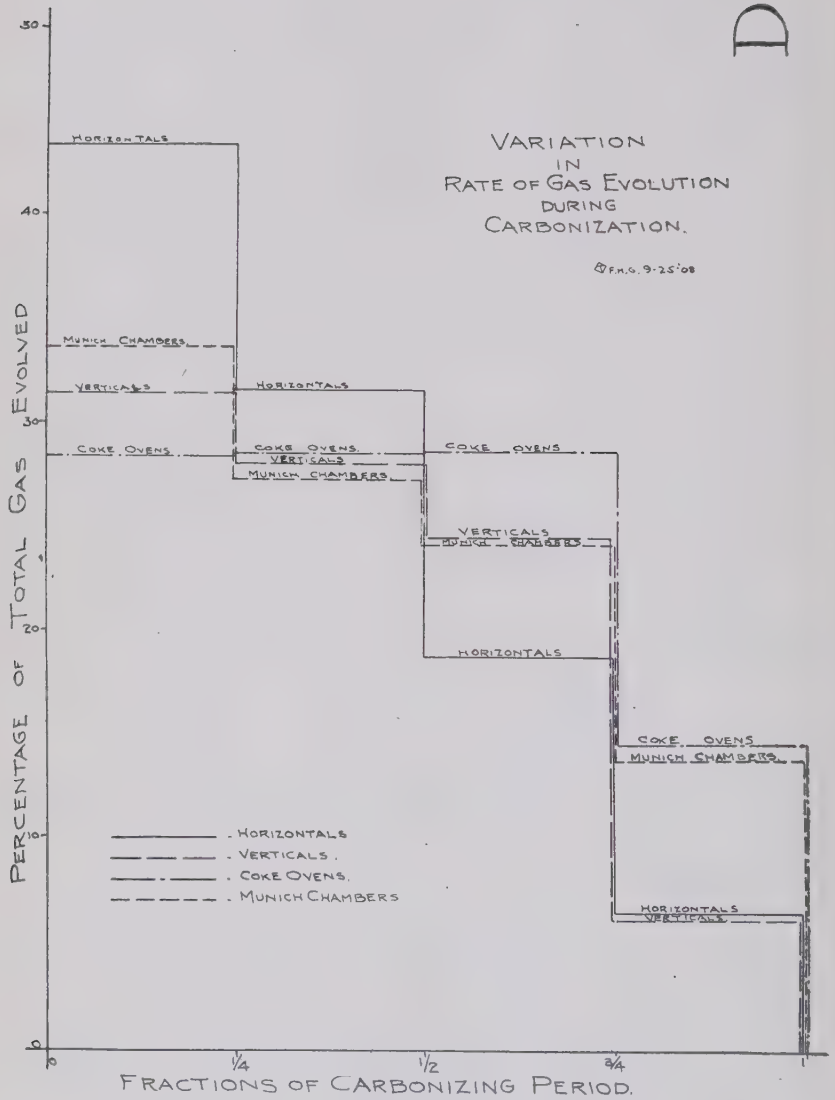
D
VARIATION
IN
RATE OF GAS EVOLUTION
DURING
CARBONIZATION.
F.H.G. 9-25-'08
PERCENTAGE OF TOTAL GAS EVOLVED
50
40
30
20
10
0
HORIZONTALS
MUNICH CHAMBERS
VERTICALS
COKE OVENS
HORIZONTALS
COKE OVENS
VERTICALS
MUNICH CHAMBERS
COKE OVENS
VERTICALS
MUNICH CHAMBERS
HORIZONTALS
COKE OVENS
MUNICH CHAMBERS
HORIZONTALS
VERTICALS
HORIZONTALS
VERTICALS
COKE OVENS
MUNICH CHAMBERS
0
1/4
1/2
3/4
1
FRACTIONS OF CARBONIZING PERIOD.

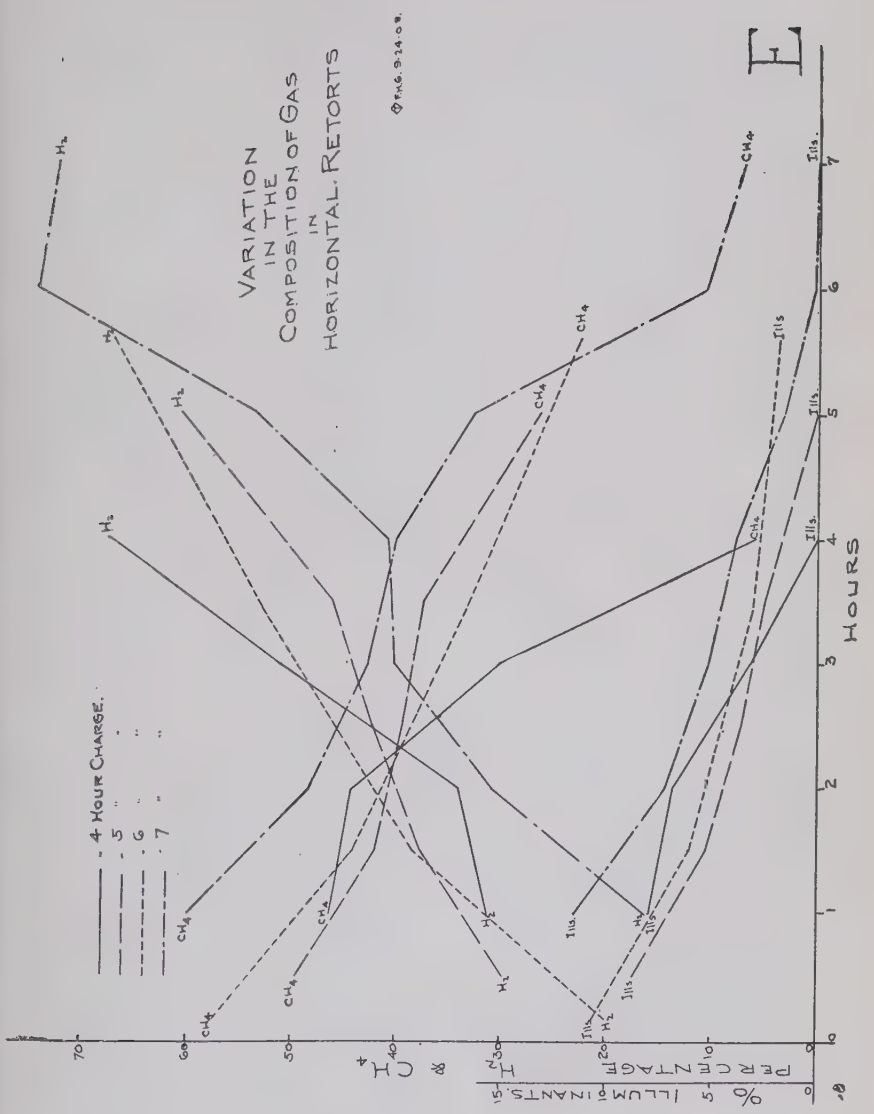
VARIATION
IN THE
COMPOSITION OF GAS
IN
HORIZONTAL RETORTS
4 HOUR CHARGE.
5 " "
6 " "
7 " "
HOURS
PERCENTAGE
% ILLUMINANTS.
H_2 & CH_4
H_2
CH_4
Ills.

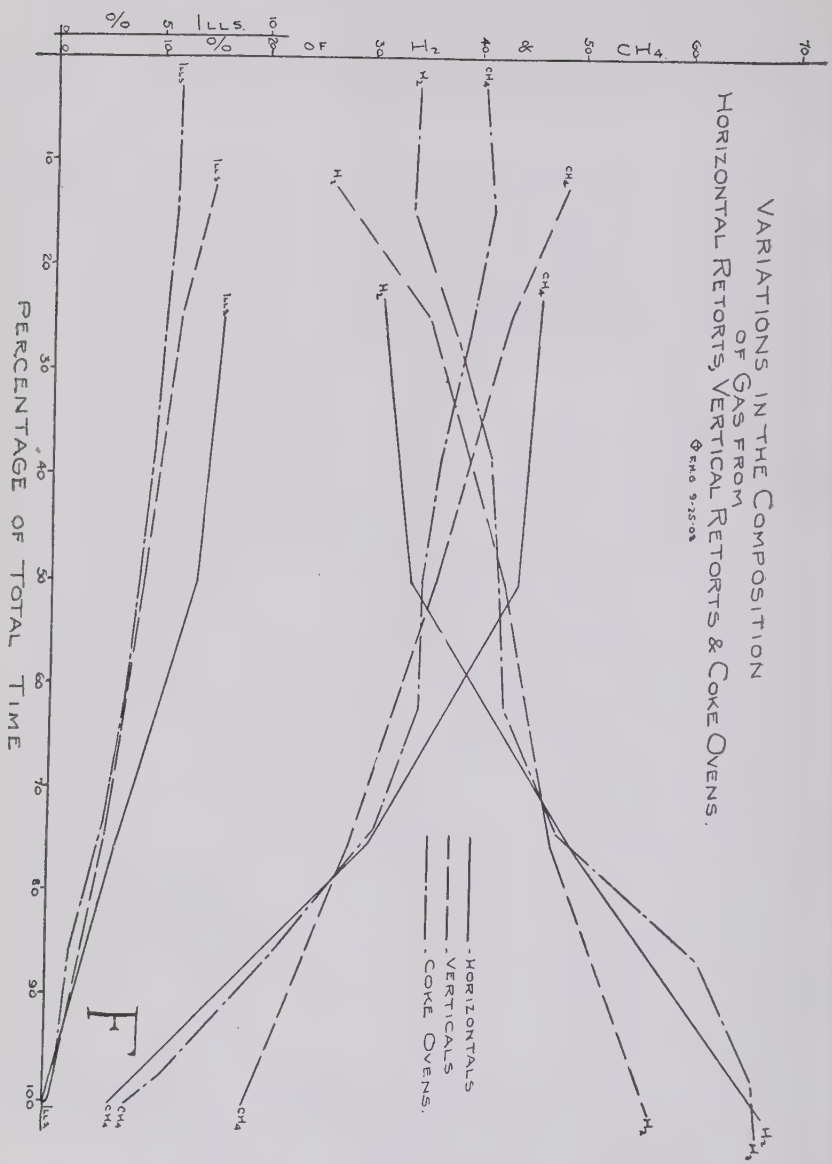
VARIATIONS IN THE COMPOSITION OF GAS FROM HORIZONTAL RETORTS, VERTICAL RETORTS & COKE OVENS.
F.M.G. 9-25-08
% ILLS. OF H_2 & CH_4
PERCENTAGE OF TOTAL TIME
HORIZONTALS
VERTICALS
COKE OVENS.
ILLS
H_2
CH_4

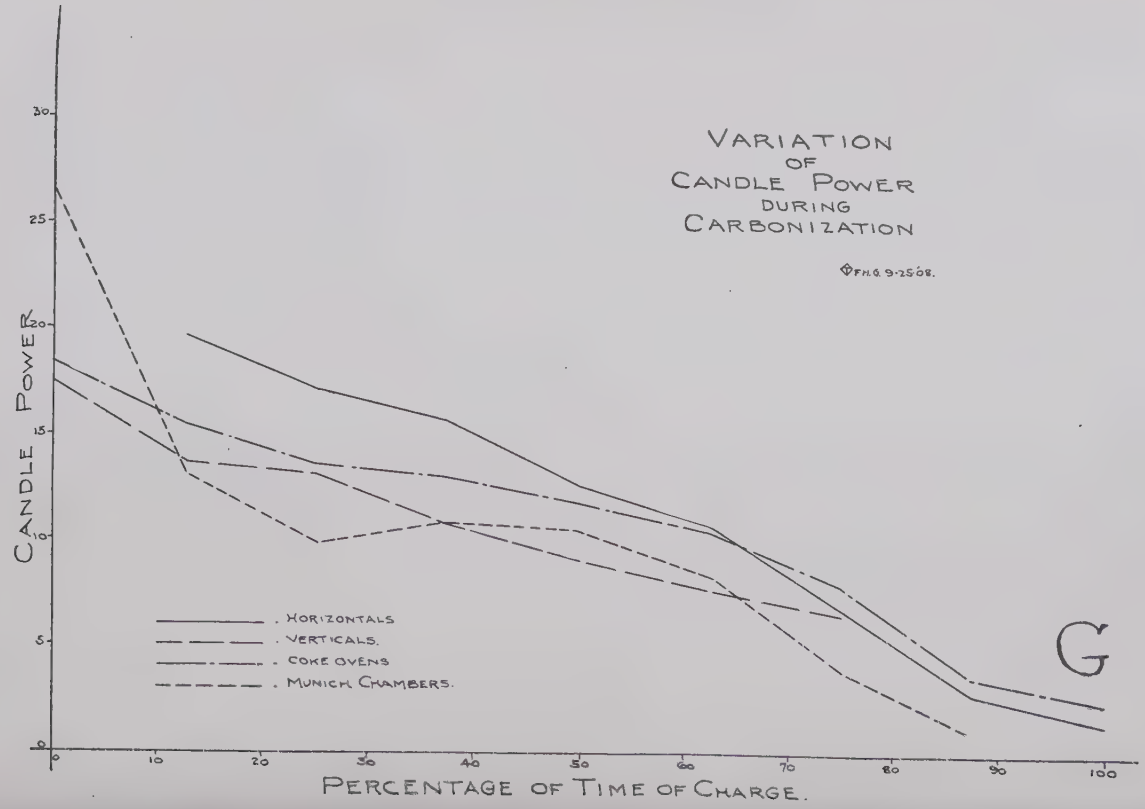
VARIATION
OF
CANDLE POWER
DURING
CARBONIZATION
FH.G. 9-25-08.
CANDLE POWER
0
5
10
15
20
25
30
. HORIZONTALS
. VERTICALS.
. COKE OVENS
. MUNICH CHAMBERS.
0
10
20
30
40
50
60
70
80
90
100
PERCENTAGE OF TIME OF CHARGE.
G

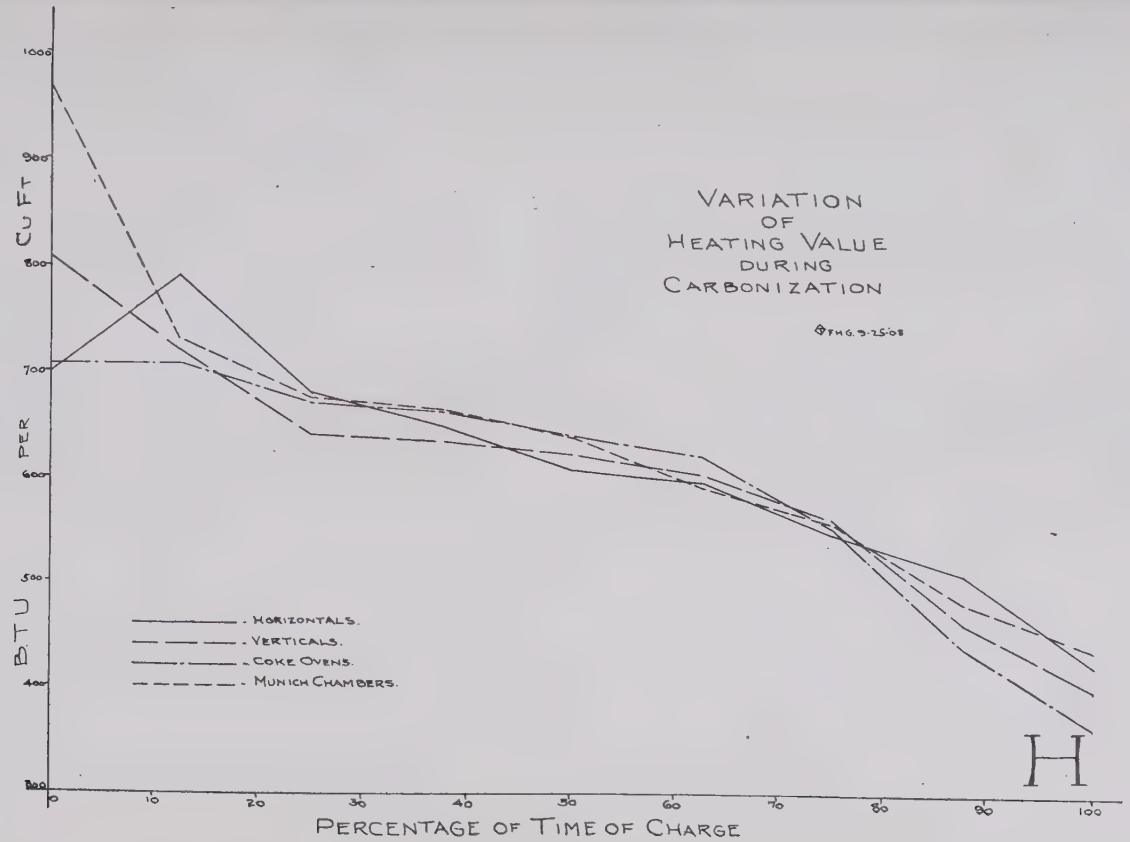
VARIATION
OF
HEATING VALUE
DURING
CARBONIZATION
FIG. 3-25-08
B.T.U. PER CU FT
1000
900
800
700
600
500
400
300
0
10
20
30
40
50
60
70
80
90
100
PERCENTAGE OF TIME OF CHARGE
HORIZONTALS.
VERTICALS.
COKE OVENS.
MUNICH CHAMBERS.
H

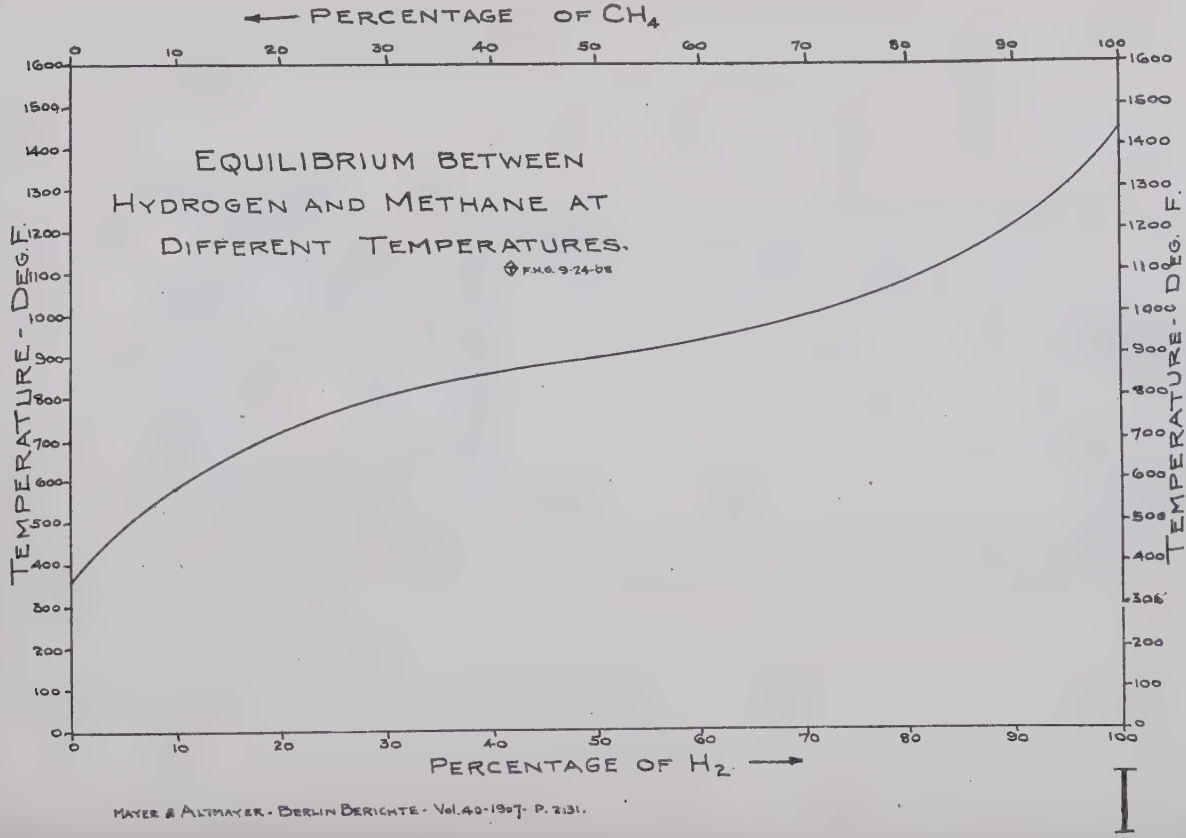
← PERCENTAGE OF CH_4
EQUILIBRIUM BETWEEN HYDROGEN AND METHANE AT DIFFERENT TEMPERATURES.
F.H.G. 9-24-08
TEMPERATURE - DEG. F.
PERCENTAGE OF H_2 →
0 10 20 30 40 50 60 70 80 90 100
0 100 200 300 400 500 600 700 800 900 1000 1100 1200 1300 1400 1500 1600

MAYER & ALTMAYER - BERLIN BERICHTE - Vol. 40 - 1907 - P. 2131.

OPPERMANN'S ELLIPTICAL RETORT.

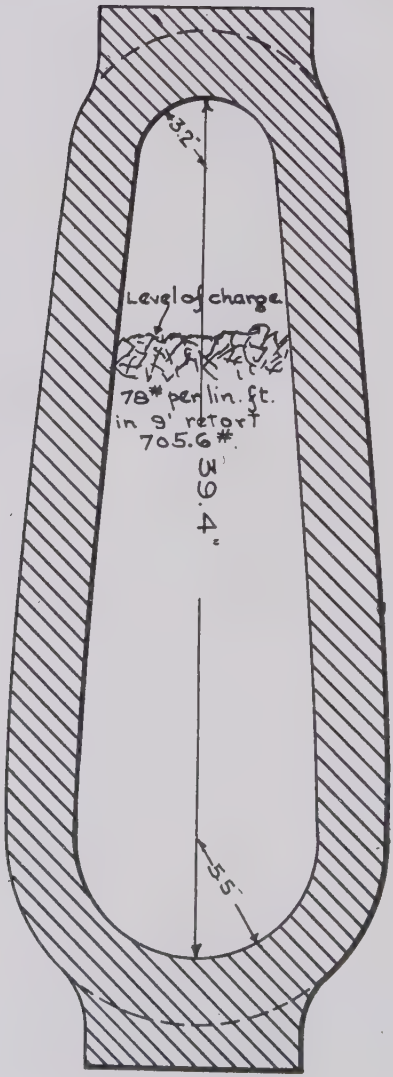

J

OPPERMANN. LON. J'N'L. GAS. L'T'G. 7.7.06

F.H.G. 9.22.'08.

SCALE. 1½" = 1'

PROGRESS OF CARBONIZATION IN VERTICAL RETORTS.

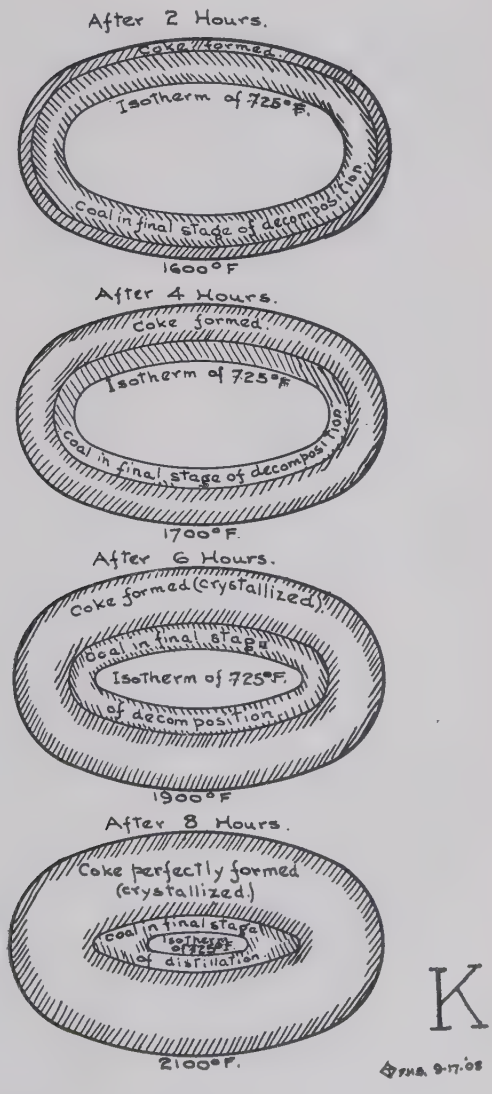

PROGRESS OF CARBONIZATION IN HORIZONTAL RETORTS.

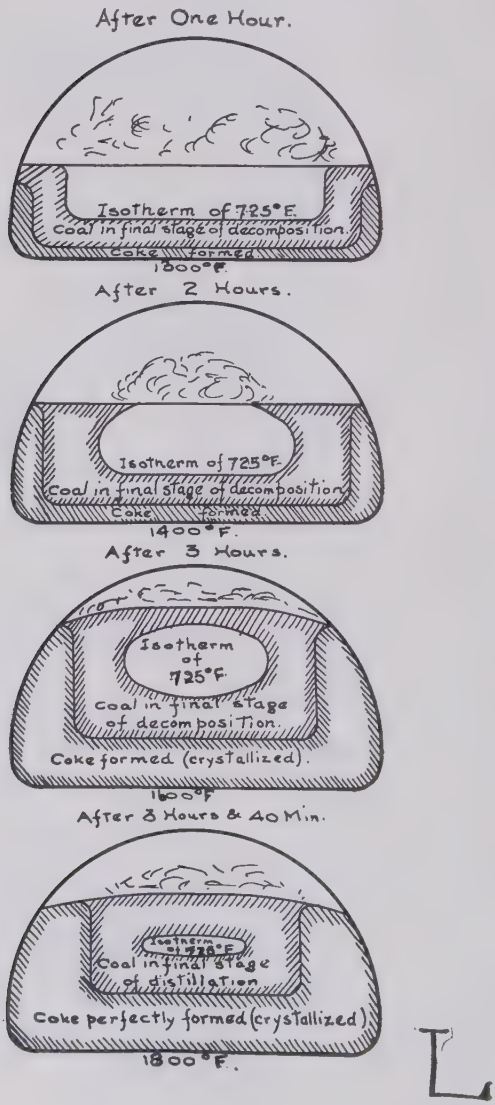

PROGRESS OF CARBONIZATION IN COKE OVENS.

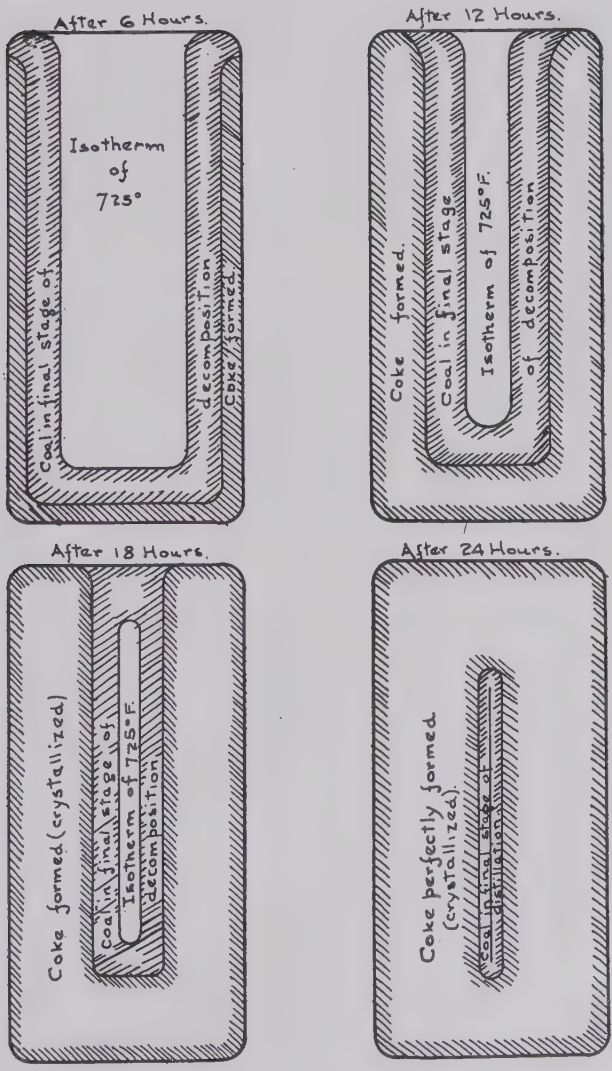

M

FIG. 9-18-08.

THE PRESIDENT: I think these two papers that have come together show very beautifully the value of the intelligent, expert gathering of data, and the scientific analysis of the laws of nature involved in our processes, and then the suggestions as to how that knowledge should be directed—two papers that will go beautifully together and must serve to advance the interest of our industry. Discussion is now open on these papers. Shall we hear from Mr. Dewey?

MR. DEWEY: (Reading.)

This paper is certainly an interesting one and has developed some points regarding carbonization that would be well worth further study.

The effect of heat upon products after distillation is of the utmost importance, and the proper solution of this question answers to a great extent, problems of coal carbonization. I question the statement that gas in the retort is ever subjected to a temperature of 1,900 degrees F. The putting in of a charge of coal into the retorts lowers the temperature in the interior of the retort to an extent much below the figure quoted. I seriously question whether any considerable portion of the gas in good operation is subjected to a temperature higher than 1,500 degrees F., whereas a greater portion of the gas is given off between a temperature of 1,000 and 1,400 degrees F. The amount of gas in a coal, when a temperature of 1,500 degrees has been reached, is practically nothing.

Under the heading, "Formation of Impurities," I note this statement: "The ammonia and hydrogen-sulphide both appear early in the distillation, soon reach a maximum and then rapidly decline, the ammonia somewhat faster than the hydrogen-sulphide." The work that I have done on this subject (see paper published in the A.G.L.J., Vol. 81, page 563) shows that the grains of ammonia per cubic foot of gas evolved, gradually increase until about the middle of the charge and then gradually decrease. However, the grains of ammonia per cubic foot are but little less in the last end of the charge than they were in the first part of the charge, whereas the grains of hydrogen-sulphide per cubic foot of gas evolved are more in the first part of the charge, and

gradually diminish in amount until they entirely disappear toward the last of the charge.

Under the heading, "Effect of Time on Exposure of Gas to Heat," the argument is made that on account of the small free space in the retort over a large charge the effect of surface decomposition is intensified. It seems to me that the effect would be exactly opposite and that, owing to the large amount of gas traveling over the small space, the surface decomposition would be less and the temperature of the gas would be less. As a matter of fact, this is shown to be true from the experiments that are given in my paper previously referred to, and ordinary retort house practice gives us the same results. Smaller charges at higher heats run off in four hours mean considerable lampblack in the mouthpiece and stand-pipes and considerable pitch in the hydraulic main. Increase the charge and the length of time of carbonization, keeping the make of gas the same per mouthpiece, gives us less carbon in the mouthpieces and stand-pipes and considerably less pitch in the hydraulic main, showing conclusively, that the gas could not have been subjected to the high temperature, and consequently, the decomposition in the large charges was less than in the small charges.

Regarding the effect of pressure in the retorts, this to my mind is one of the most important subjects that we have to deal with in the retort house. The installation of apparatus for governing the pressure in the retorts, namely, the outside overflow, has increased the yield of gas per pound of coal carbonized and increased the candle power. The retort house governor as at present developed does not do away with the pulsations caused by the exhauster. These pulsations of gas cause a fluctuation of pressure within the retort, and should be overcome to get maximum results.

The use of a fan in place of the ordinary exhauster would do away with this trouble. The use of a motor to run the exhauster would assist materially, as the pulsations seem to be caused by the jump of the engine coming over centre. The use of a smaller exhauster run at a higher speed would also assist materially.

Mr. A. E. Forstall: Mr. President, in Mr. Taussig's paper the statement is made that there is a small amount of free carbon, but as much as 6 per cent. of naphthalene in the tar from the Woodall-Duckham retort, and then the explanation is given that the low carbon is probably due to the lampblack being filtered out as the gas passes up through the green coal. I understood Mr. Taussig to say that the highest heat in the retort was just where the coal came in, and I do not quite see how free carbon can be formed in the lower portion of the retort that is not highly heated and be filtered out by the coal in the upper portion. It seems to me that if much free carbon is going to be found, it will be formed in the upper part of the retort and escape without passing through any coal to filter it out.

In Mr. Fulweiler's paper there is a statement "that Isaac Carr, at Widnes, of cheap gas fame, was the last champion to give up the fight for the Dinsmore process, against theoretical and practical difficulties." I think that when that gets into print over in England there will be a forcible statement from Mr. Carr that he did not give it up in the face of practical and theoretical difficulties, but merely because benzol enrichment of his gas proved cheaper (under the reduced price of benzol that has prevailed for the last two years) than the Dinsmore process. He has made that statement publicly two or three times.

Mr. Fulweiler gives a calculation of the average time of exposure of the gas to contact with the walls of the retort. I presume that this is based on a steady continuous travel of the gas from the point of evolution from the coal to the mouthpiece. I do not think that those conditions ever obtain in a retort working on a hydraulic main, and I think it has been pretty conclusively demonstrated by the late Mr. William Young, that a large part of the decomposition of the higher hydrocarbons, which takes place in the retort, is due to the prolonged contact with the wall, produced by the pulsation, which is bound to occur on account of the way the gas comes out of a dip pipe sealed in water. It comes out of such a pipe in bursts, not steadily, and the result is that the same gas, for a given mean speed, comes in contact with a great deal longer

amount of wall, and is in contact with the wall to a greater extent than if it traveled steadily from any one point of the retort out to the mouthpiece.

Mr. Fulweiler speaks of an elliptical retort which apparently has never been put into operation to any extent. In that connection it is interesting to note that within the last two months one of the Glovers, in England, has patented and is now building a setting, in which he has six or more rectangular retorts, about 30 inches high, and not over 10 inches wide. It is practically the same idea as the elliptical retort.

Mr. Fulweiler also speaks of operating with a light seal, and an even gauge in the hydraulic main, or with a heavier seal and a higher vacuum in the main. A heavier seal and higher vacuum increases the pulsation of, and the bad effect on, the gas of which I have previously spoken, and it does not seem to me that there is any practical difficulty in operating with a low seal. As far as the thickening of the tar is concerned, it is only a question of getting your tar out of your main or keeping it covered with a sufficient layer of water. I know from my experience that working with a seal that was slightly under three-quarter inch, there need not be any trouble from the thickening of the tar, that is, any trouble that couldn't be overcome with a good deal less labor than is used in a good many retort houses that are supposed to be very economically run.

A little further along it is stated that the English experience with retort house governors seems to show that their use is very desirable. It is, under English conditions. I do not think there is any necessity for their use under American conditions. As I understand English conditions, in practically every gas works in England a long run of foul main, and the whole condensing outfit of the works are inserted between the inlet of the exhauster and the hydraulic main. Under those conditions no matter how closely the exhauster is governed, fluctuations in the rate at which gas is made would cause fluctuations in the amount of friction between the exhauster and the hydraulic main, and therefore, fluctuations in the pressure or vacuum on the hydraulic main.

In the United States the works are laid out with a very

short connection between the hydraulic main and the exhauster, so that if you govern your exhauster closely, which can be done without any great difficulty, you get a steady pressure in the hydraulic main; and if there is 100 feet or so between the hydraulic main and the exhauster, it is not very difficult to bring a pressure pipe from the hydraulic main to the exhauster, and govern the exhauster by the pressure at the hydraulic main and not by the pressure directly at its inlet, so that I never could see that there was any field in the United States for retort house governors.

Early in the paper the statement is made that the principal object to be desired is to quickly raise the coal to the point of carbonization and drive off the evolved gases, and in the summary it is stated that the economic demands of gas made per dollar expended in fixed charges require a high make per mouthpiece, which calls for a short heavy charge at a high heat. Some references are also given to experiments made by M. Verdier in putting certain weights of charge in different sized retorts. It has never seemed to me that the logical deduction has been made from the experiments reported by M. Verdier, and other similar experiments. It is unquestionable that better results, as far as gas is concerned, are obtained from thin layers of coal from which the gas is driven off as rapidly as possible by the use of a high heat, and that the use of a thin layer in a large retort leads to trouble, but nobody has ever followed that out by taking say a 300 pound charge and fitting the retort to that charge. Everybody seems to think the retort must be of a certain size. You should pick out the charge that will give the most economical result and fit a retort to that charge. If M. Verdier had made his retort smaller than 14 by 24 by 10, he would have obtained still better results from his 300 pound charge. It is impossible to fill horizontal retorts entirely with coal as long as you have to draw the coke out with a reciprocating drawing tool, but, with pushing machines, it is perfectly possible to fill a retort. With horizontal retorts, I should think that the direction of progress would be to take say a 300 pound charge, and make the retort fit that charge, and you would get very much better results than have so far been obtained

from the horizontal retorts. It has always seemed to me, however, that continuous carbonization is the thing. You can put your coal in in very small lots and it ought to be entirely possible to arrange both the heating devices and the charging and discharging mechanism so that you can get continuous carbonization, going, not only smoothly as far as mechanical difficulties are concerned, but in such a way as to produce the maximum results that are possible from a pound of coal.

Mr. A. Court: It may be of interest to know that there is a bench of verticals in operation in the United States. They were put in operation ten days ago at Columbia, Missouri. The operation has been successful so far. The retorts are ten feet long, holding a thousand pounds of coal; and it takes just twelve seconds to charge the retort with this thousand pounds, and the discharging is practically instantaneous, no sticking to the sides of the retorts having been encountered. The coke is of very fine quality. The tar has the consistency of machine oil and almost the same color. We found that the furnace requires very little clinkering, just an occasional breaking up of the fire. The lower mouthpieces operate from the outside of the bench, making it unnecessary for the stoker to go under the bench.

The President: Anybody else volunteer?

Mr. R. B. Brown: I will not say anything about Mr. Taussig's paper except to follow Mr. Forstall in his statement that continuous carbonization always appealed to me as the proper method of doing away with most of our difficulties in intermittent charging. We are all watching the results of the various systems of vertical retorts in operation, and I was very much interested in Mr Taussig's description of them. Knowing nothing about them personally I will not discuss them.

In Mr. Fulweiler's paper there were several points I noticed. His rather positive statement that low seals could not be used without thickening the tar I think should be corrected. It is true with some types of hydraulic mains, but where there is sufficient depth below the bottom of the dip-pipe in the main, and means are provided for taking away the tar rapidly,

I have never found there was any effect on the tar by using a very low seal, or no seal at all.

I know one main which was operated for some time as an anti-dip without the ordinary anti-dip provision, by lowering the seal rapidly, after the charge was put in, and bringing up the seal rapidly just before the opening of the retort. This would certainly be an extreme example of the case which he warned against, and we did not have any trouble with the tar.

Mr. Fulweiler calls attention to the fact that transference of heat to the charge by conduction is very much more rapid than by radiation. This is an important point I think and it means to me (and it has also been brought to my attention by some experimental work which was done during the last two years), that we must crush our coal finer. The finer coal we have all been afraid of in the past years, with our lower temperature carbonization, is no longer a bugbear when we begin to increase the heat, and I think that we will all crush our coal very much finer in the future, and take advantage of this fact that the heat is transferred from the walls of the retort to the charge more rapidly by conduction, and that the radiated heat from the upper surface of the retort may be to an extent neglected. Some recent results in horizontal charging would indicate that full retorts and heavy charges with high heats show a maintenance of the candle power and a large increase in yield, a slight decrease in tar and a large increase in ammonia. It seems to me that all these results are indicated by a proper following out of Mr. Fulweiler's statements of conditions.

Mr. Fulweiler apparently takes a charge of 380 pounds in a 16-inch by 26-inch retort; he does not state the length of it, but I presume he means 9 feet, as the best practice. I do not think that that charge is nearly heavy enough to get the maximum results. Maximum results from a horizontal installation mean first maximum make per mouthpiece. This means reduction in fuel, in labor, in interest, depreciation, and repairs, and an increase in the make per unit of area of the ground occupied. Next is maximum yield, reducing our material costs and with this increased ammonia returns. To obtain these three

maximum figures we have to a certain extent to reduce the quantity and quality of our tar, but under present day conditions this is not nearly so important, I think, as are the other three items.

I do not entirely agree with Mr. Forstall in his idea of fitting the retort to the charge. It is better to fit the charge to the retort, then balance the period of carbonization of charge and the temperature to get maximum results. I do not think we know yet very much about what temperatures can be carried. In certain recent installations the temperatures carried have been higher than anything ever attempted before, and apparently the increase carries with it better results along all the lines I have mentioned.

MR. ROLLIN NORRIS: I would like to ask Mr. Court if he will supplement his statement with the dimensions of his retort at the top and bottom, and the length of charge.

MR. COURT: The retorts are 12 by 22 at the top and 14 by 24 at the bottom, and the charge is running at the present time a thousand pounds in 12 hours, but that will be reduced to 10 hours very shortly, and we are confident of running 8 hours ultimately.

MR. DOHERTY: I am not prepared to discuss either of these papers but for two reasons I wanted to comment on them. First, I wanted to pay a tribute to the excellence of both of these papers, and I am sorry that we did not take them up first and discuss them till we got through, even though we had to leave our other program out, excellent as the other program may be.

There are one or two points that I would like to call attention to, because I cannot thoroughly agree with them. Mr. Fulweiler gives a heat transfer through retorts of 11.25 British Thermal Units per degree per hour per square foot. Now that is a remarkably high rate of heat transfer, and I can best example that by stating that with ordinary thin metal diaphragms and with air or gas on both sides, that is, a dry unsaturated gas, on each side, the transfer is from one and a half to two and a half B.t.u. per square foot per degree per hour. I think that many members have frequently heard me remark that I did not see how certain results were secured

with fire clay unless, as the temperature increased, the conductivity increased to a point where the conductivity was greater than for metals. Now, here is the statement made by Mr. Fulweiler, and which is probably correct, which indicates that the heat is transferred through the fire clay wall at a rate nearly five times as great as through a thin metal diaphragm at ordinary temperatures.

Now I believe that that rate of heat transfer is due entirely to the effect of radiant energy, or radiant heat. I think it is the ability of the heat to jump from particle to particle without conduction which is largely the explanation of it; and I think the reason he has concluded that the heat transferred to the charge in the retort is primarily due to conduction rather than radiation, is because the free space in the top of the retort is filled, for a large portion of the time, with an atmosphere that has probably absorbed all of the radiant heat. As a rule, I like to think of radiant heat, not as radiant heat, but as radiant energy, because it really is radiant energy. When it strikes an object which is opaque to it, and a portion is not reflected—as a rule some of it always is reflected—then that portion becomes heat. I think the heat from the top of the retort does not reach the charge during a large portion of the gasifying stage.

I am sorry Mr. Fulweiler did not give us the temperature of final gasification. He gives us a temperature of 725 degrees Fahrenheit, as the stage of active gasification. My own work along this line would indicate a lesser temperature than that given by Mr. Fulweiler. I am unable to say what final temperature is required to reduce the volatile matter in coal to the point generally realized in our ordinary gas coke, but I am really curious to know what that temperature is. I believe it would be a benefit to all of us. I am inclined to think that the calculations made on the contact of the gases are apt to be worthless. The shape of the retort and the free space in relation to the heated area, I am quite sure will affect this very much. I am not able to give my reasons, but to calculate a mean velocity for the entire free space will include very erroneous conclusions. If we could calculate the mean temperature and mean velocities, we would then have

a similar condition to that in a gas engine; we could get almost zero efficiency. I do not think either one of these papers should be subjected to hasty discussion, and what I have said here, I simply say as a suggestion and for consideration rather than anything final.

Personally, I wish to pay a tribute to the authors of both papers. I think they are very good.

MR. FREDERICK MAYER: Unfortunately Mr. Taussig's paper reached me too late in order to prepare data which I have in hand regarding the system of vertical retorts. Therefore, I will confine my remarks to a general comparison between the so-called intermittent and continuous process of gas production in vertical retorts.

The subject referred to in Mr. Taussig's paper is one of the greatest interest that could be presented to the consideration of Gas Engineers at the present time. Mr. Taussig states that there is practically at the present day only one Vertical Retort system in successful operation, and that such system is the one invented by Dr. Bueb, of Dessau, Germany. No other system, either continuous or intermittent, is in successful operation actually at the present time.

Notwithstanding the many publications regarding the Bueb System of Vertical Retorts, which have appeared from time to time in the technical journals of this country, as well as those of Europe, comparatively little is known of the course of development, and the causes that led to the construction of the Bueb apparatus in its present shape.

The Bueb System is not the result of one general and broad idea to manufacture gas in Vertical Retorts, in fact the first experiments were made with a short horizontal chamber oven. Sufficient information was obtained with this installation to make the application of Vertical Retorts appear desirable. The application of the Vertical Retort resulted in a number of dismal failures, but Dr. Bueb discovered through these experiments that the process of carbonizing coal had undergone a decided change. When such discovery was made, it, of course, became necessary to resort to laboratory experiments in order to establish causes for these changes in the process of carbonization. A very considerable time was re-

quired for the laboratory work, but these experiments finally resulted in the establishment of a new theory and method of carbonization requiring conditions entirely unknown to the science of Coal Gas production.

The theory established by Dr. Bueb pointed to the fact that coal gas could be produced practically free from naphthalene and cyanogen, containing a greatly reduced amount of sulphur compounds, a largely increased amount of ammonia, and tar poor in carbon, providing differential temperatures could be established and maintained within the same retort containing the coal charge. When these facts had been thoroughly established they pointed at once to the requirements of the details of construction of the apparatus, and to the conclusion that a Vertical Retort would be most desirable to meet the requirements established by the new theory.

To produce the differential temperatures above referred to, Dr. Bueb decided to apply extreme high temperature on the exterior surface of the retort to effect a quick formation of coke immediately adjacent to the inner surfaces of the retort with the intention of maintaining the centre core of the coal charge at a much lower temperature. The great resistance offered by the coke formed on the inner surfaces of the retort, resulted in forcing the outgoing gases to pass through the centre core of the coal charge, thus preventing any decomposition of the outgoing gases. In order to maintain this condition it is, of course, necessary to fill the entire retort with the coal charge, at least as far as the same is exposed to the direct action of the fire. It was also found necessary to prevent any empty spaces in the retort in order to maintain a uniformity of conditions, and particularly to avoid a space in the bottom of the retort for the collection of tar.

Any tar that may be produced during the early part of the carbonizing period, and that may find its way to the lower portion of the retort, will be exposed during the latter part of the carbonizing period to a temperature sufficiently high for its distillation, which results in driving the distillate through the entire height of the coal charge in a vertical direction, whereby the distillate is filtrated and its carbon is liberated. The tar

vapors that leave the retorts under these conditions furnish a product of condensation which is entirely unlike that produced in Horizontal or Inclined Retorts, for the reason that it contains no pitch and consists merely of a dark brown liquid oil.

From the above it appears that a combination of the following four factors are absolutely necessary for the successful carbonization of coal in Vertical Retorts under the Bueb Process:

1. A Vertical Retort accessible from top and bottom,
2. The filling of the entire retort with the coal charge as far as the same is exposed to the direct action of the fire,
3. The avoidance of a hollow space in the bottom of the retort for the collection of tar,
4. The application of a continuous minimum temperature of from 2,600 degrees to 2,800 degrees F. in the lower portion of the retort.

Another result due to the high temperature is the rapid production of gas. It is a well known fact that the quicker gases are passed over hot bodies the less they adopt the temperatures of such bodies.

The gases leave the top of the retort in the Bueb Process, notwithstanding the high temperatures applied, at such low temperature that decomposition of the light hydrocarbons and the formation of naphthalene is impossible.

Another necessity for the application of a differential temperature is due to the tapering shape of the retort. As the volume of the coal charge is the greatest at the bottom and smallest at the top, the temperature must be gradually decreased from the maximum to the minimum, from the bottom to the top of the retort, so that the time of complete carbonization is as near as possible alike throughout the entire length of the retort.

The central core of the coal charge must be maintained at as low a temperature as possible until the end of the carbonizing period. If the temperature were uniform throughout the entire length of the retort, the central core which forms the channel for the off-going gases would disappear at the top of the retort long before the coal in the bottom of same

would have been thoroughly carbonized, and under this condition, the ascending gases from the lower part of the retort would be exposed to superheated coke in the upper portion of same, resulting at once in the decomposition of the light hydrocarbons and the formation of naphthalene.

With regard to the continuous processes for coal gas production, I believe that no process will ever be successful that requires feeding machinery at the top of the retort and discharging machinery at the bottom of same, in continuous operation. The wear and tear of such machinery and the cost of operation will be a very serious objection to its general application. Another objection to the application of such expensive machinery for the operation of the retorts is that the machinery may give out at the time when the settings are in good condition, so that a comparatively great auxiliary capacity is required in case shut-downs are necessary for the purpose of repairs to the operating machinery.

Mr. Taussig refers to the possibility of sticking of charges, and this fact points to the absolute necessity of ready access to the top and bottom of the retorts, in order to relieve such condition at once. We all know that the sticking of charges will occur in all kinds of retorts, whether they are horizontal, inclined or vertical. Its principal causes are:

1. Deformation of retorts and settings resulting from continuous operation.
2. Carelessness in properly adjusting the heats and temperatures on the part of the operators.
3. Formation of carbon on retort surfaces.
4. Defective workmanship in the setting of the retorts.

In retorts supplied with charging and discharging machinery at the top and bottom of same, the charges will stick occasionally the same as in any other retort. It is not an infrequent occurrence that the coke will be removed from the lower portion of the retort while a portion of the same has become stuck in the upper portion of the retort, thus forming an open space which would at once become overheated, affecting the life of the retort. If a charge sticks in the retort supplied with feeding machinery on the top of same, such condition can only be relieved by sufficient amount of pressure resulting

from the continuous feeding of small amounts of coal into the top of the retort. The stuck portion of the charge will finally drop suddenly to the lower part of the retort, causing a vacant space in the upper portion of same until the latter has been refilled through the coal-feeding device on top of the retort. Conditions of this kind in retorts closed top and bottom will not only seriously interfere with the life of the retorts, but will also disadvantageously affect the results of operation. A charge when stuck in a retort open top and bottom is of no serious consequence, as such charge is easily removed at the end of the carbonizing period by applying a bent rod from the bottom or a push bar from the top.

It seems unreasonable to apply charging and discharging machinery, and maintain the same in continuous operation in connection with vertical retorts when everything is so extremely advantageous for a gravity discharge. The continuous removal of coke from the bottom of the retorts by mechanical devices, certainly results in the disintegration of same, which, in my opinion, is another very strong objection to the application to such machinery.

The dimensions of the Bueb retorts, and particularly the amount of taper, have been established by results obtained in actual operation. The uniformity maintained in the carbonization of the coal permits of using various kinds of coal without changes in the taper. This fact has been thoroughly proven by the successful carbonization of various kinds of coal, differing materially in their composition, and it was found that no change in tapering of retort was required.

Westmoreland and West Virginia coals have been carbonized in Dessau in vertical retorts with perfect results. The amount of gas produced from Westmoreland coal, per retort, was 13,950 cu. ft., and the amount produced from West Virginia coal was 14,410 cu. ft. The yield from the Westmoreland coal was 5.597 cu. ft., and that from the West Virginia coal was 6.09 cu. ft. In both instances steam was decomposed during the last two hours of the carbonizing period. The calorific value for the Westmoreland coal was equal to 608 heat units, and that from the West Virginia coal 613 heat units. The candle power, determined by London "Argand

Sugg" burner amounted to 14.85 candles for the Westmoreland coal and 14.25 candles for the West Virginia coal. The above values include corrections for 60 deg. temperature and 30 deg. barometric pressure.

The results obtained with the inclined and vertical chamber ovens to which Mr. Taussig refers, are indicative of most promising results for the future, but in my opinion it will be from two to three years before all defects in details of construction have been removed.

THE PRESIDENT: I will ask the gentlemen to close. Mr. Taussig, have you anything to say?

MR. TAUSSIG: With reference to Mr. Forstall's comment as to the free carbon in the tar of the Woodall-Duckham system, I will say that it is very improbable that much lampblack is made in the upper section of the retort, because the cold coal, coming into contact with that portion must necessarily reduce the heat on the inner surface considerably. This carbon and naphthalene is more apt to be made lower down because the continuous movement of the partially carbonized coal lets the gas come into contact with the heated sides of the retort.

In the intermittent systems, as has been explained in my paper, the gas all passes up through the centre of the retort.

I wrote to the owner of the Columbia plant several weeks ago to get information as to his setting, but up to the time of coming to this meeting I received no reply. We are told that they have been running for ten days successfully, burning their charges off in twelve hours. They are also, I understand, using screened coal. Our experience at Manchester, as stated in the paper, showed that there will be no difficulty encountered with the use of any kind of coal with twelve-hour charges. It, therefore, remains to be seen what success this setting will have when they try to use run-of-mine coal with shorter charges, especially as they have less taper in their retorts than we had at Manchester.

There seems to be a discrepancy between Mr. Fulweiler's paper and mine, in regard to the making of benzol in vertical retorts. Our experiments in Manchester were made with an

empty space of three feet or more above the coal in the retorts, this space being left for fixing surface. We attributed the high candle power obtained there, to the fixing of the gas as it came through this exposed heated portion of the retort. As long as the gas goes through the centre of the charge and cannot come into contact with the sides, as is claimed in the Dessau system, there can be no way to expose the gas to make benzol.

THE PRESIDENT: Mr. Fulweiler.

MR. FULWEILER: Replying to Mr. Dewey, he made some remark as to the ammonia and sulphur compound. I would say that it is very difficult to get experiments on these two compounds to show any degree of uniformity. I have made such experiments a number of times, but it isn't safe to guarantee too much on any one particular set of experiments. I have records of a great many tests and by selecting particular sets could apparently prove almost anything. However, I think the usual trend seems to be in the line which is indicated in my paper.

Regarding surface contact, I would ask Mr. Dewey whether he noticed that I stated carefully in my paper that in these experiments the length of time of exposure of the gas in the retort was exactly the same in the three cases. That puts a very different face on the whole thing.

Replying to Mr. Forstall, I would say that Isaac Carr, from what I have heard of him in England, has the reputation for frequently making statements and then living up to them in the face of the hardest kind of difficulty, simply because he made the statements.

Regarding pulsation, I would say that I think Mr. Forstall rather argued against himself. He says one time it is extremely important not to have pulsation, and then he says again that he has decided that the retort governor isn't any good.

He calls attention to a three-quarter inch seal and says he did not have any trouble with it. I don't call a three-quarter inch seal a low seal; I am talking about when you get down to a one-quarter and a one-half inch seal, then you begin to

have trouble with the thickening of the tar. I think a three-quarter inch seal pretty good practice.

Replying to Mr. Brown, I quite agree with him that there are means and methods by which fairly low seals, even lower than three-quarter, could be successfully used with hydraulic mains and have no trouble with tar, but I think you must use a special form of main or else you must be especially careful to keep the tar moving. With a seal smaller than three-quarters a man is tempting Providence; and if his tar once starts thickening, anybody who has been there knows it is not a very pleasant job.

Regarding the size of the charge, I don't know what Mr. Brown considers a maximum make per mouthpiece, but these conditions would give 11,400 cu. ft. per mouthpiece per day, and I thought that was pretty nearly up to the limit.

As to Mr. Doherty's point about the final gasification point of the coal, I am very sorry I haven't any definite figures to show. We do know that the last traces of volatiles, as we determine them, are not driven off until we get pretty well up toward a red heat—a good, high red heat. There used to be a method of determining volatiles in coal, in which we heated the coal only with the Bunsen burner for one minute after the gas ceased to come off; then we came to the present method of heating it with the blast lamp for three minutes, and the second method gives higher volatiles. We cannot say exactly whether or not it is due to the burning off of some of the fixed carbon, but one point I do know is that at 850 degrees Fahrenheit, long-continued heating drives off from the coal about 50 per cent. volatile matter as we ordinarily determine it. This may be of some interest.

Regarding time of contact, I quite agree that for absolute figures calculation is quite useless. It does not give us absolute figures, but I do think that these calculations give us directions in which we may expect next to go. It is a sign post pointing the way to the town, and while it doesn't say how far it is, it helps us a great deal to know which way to go.

The President: The next paper is by Mr. Ramsburg.

HOLDER CUP AND TANK HEATING.

Question No. 17 of the Bureau of Information was as follows:

> "What is the plan of piping to use to keep the water in the tank and cups of a 400 M. cubic foot gas holder from freezing, in a locality where the mercury drops to 30° below zero?"

There were three replies to this question, each containing valuable information, two of which were the result of practical work in districts where such weather was experienced. It has occurred to me that the subject was worth a somewhat closer study, and at the request of the Technical Committee, I have prepared the following notes:

Undoubtedly the problem of preventing the formation of ice in the steel tank and cups of a holder that is in an exposed position, and subjected to an occasional temperature of 30° below zero, is as difficult a one as we have to encounter, for it appears in such cases that complications arise that are unknown in the operation of the average holder in this country. The difficulty is possibly due to the fact that where the water is in a quiescent state as in a holder tank, it frequently happens, that it falls several degrees below freezing, in which condition a slight motion will suddenly convert it into anchor ice which will adhere to the sides of the tank. This is an exemplification of well known phenomena. Cases have been known where a very considerable quantity of ice has been found to be present at a point at which tests shortly before showed the presence of no ice. In such a case it is necessary to take the precaution of seeing that the water at suspected points does not fall below such a temperature as will leave a margin, sufficiently large in the judgment of the Superintendent to provide against usual climatic conditions and sudden abnormal changes in temperature.

Experience has further shown that when the lower lift of

the holder is landed, there is a tendency toward the formation of ice along the sides of the tank on the weather side more rapidly, than where a freer circulation can be obtained, and under the condition where the cold side is in direct communication with the warmer central portion of the holder. There are cases also in which the presence of considerable quantities of tar in a holder tends to make trouble through thickening and through stratification preventing the circulation during cold weather.

The presence of ice in a tank may not only cause serious bending or wrinkling of the holder sheets and grips, but it may cause the cups to leak by settling on the ice. There have been instances where so much ice has been found in a holder tank as to lift the framing for the crown support, which of course is a very serious matter.

Having fixed upon a temperature for the water in the holder tank, it should never be necessary to admit steam unless the temperature falls below a standard, which say is 40°, at what are believed to be the coldest points in the tank. It would seem judicious to decide to always admit steam to these points as soon as the temperature falls below this. The basis for economy will consist of frequent observations of temperature, turning off the steam when it is not needed, and turning it on again when it is shown to be needed.

This appears like unnecessary advice, but it is by no means unusual to find that the turning on of the steam has been postponed too long, or neglected, and in other cases it has been turned on in November, and left on until March, under which conditions the temperature in the tank may be as high as 90°, or upon the event of a particularly cold spell, this constant amount of steam may prove insufficient to meet the abnormal conditions, and ice results.

Methods for Steam Admission.

In effecting the ice prevention, three methods appear to be in use for the admission of the steam. One is simply to

introduce a line of piping ½ in. or ¾ in., with or without an elbow to give a current around the tank, and blow live steam right into the point or points desired. Another method is to take the water by means of an ejector from the top of the tank, and introduce it half way down and at the bottom. The argument offered for this method is that the surface of the tank water, between the sides of tank and holder, being necessarily warmed, by other jets, will thus introduce the warmest water obtainable further heated by the ejecting steam, to the coldest locality, or to the bottom, from which it rises and insures circulation at the cold points. The third method is to pick the cold water up by an ejector from the coldest points, and depend upon the replacement by the somewhat warmer water adjacent thereto, and the rapid motion of the water itself, to prevent the formation of ice. I am unable to say whether the second or third method is the best, but I believe that either is better than the first method, and will say that we have had success by using the third.

There is no doubt that the Superintendent must judge for himself at how many points it will be necessary for the ejectors to be put to work. Local conditions in addition to the ordinary climate will be factors that will control. The introduction of steam along the surface of the tank and in the cups we recommend should be done by the use of ejectors which pull the water from the bottom, and send it along in a current around the surface. While there is no novelty in this at the present time, I am aware that it is not universally used, and that many of the Superintendents still use the inserted open end of a pipe. I believe this to be wasteful of steam, for using an ejector the temperature can be maintained at a lower temperature without danger of freezing, by reason of the motion that is given to the water through the cups and tank.

Ejectors.

Having decided that the ejectors are more economical than the use of live steam blown directly into the water, it is pertinent to discuss the different designs of this apparatus. What

we wish to obtain is an ejector which will give the most circulation with the smallest amount of steam, and will operate at the lowest steam pressure. We have examined into quite a number of designs, and have experimented with quite a few types, and have in this study found an ejector which we think covers the object to be attained successfully.

On Plate 1 are shown four types, "A", "B", "C" and "D". Type "A" was put in service in our plant in 1899, and we were much gratified to get what we thought excellent results. They had been in service but a short time, when we discovered that the consumption of steam had increased enormously, and, upon examination, we found that the steam orifice had eaten away, so that the diameter was nearly twice as great as when first put in service. We then designed another jet which possessed the advantage of having an easily removable and cheaply replaceable steam orifice. This design was sent to a well known firm of steam specialists, who re-designed the apparatus evolving that shown in Type "B". This they patented. You will notice that the steam orifice shown at "F" has the advantage of having a long opening; another advantage in the finished ejector is that both this and the cup shaped piece "E", into which the steam is delivered, are made of hardened brass. The size of this orifice is 1/8 in. From its construction, and from the material of which it is made, it disintegrates very slowly, and consequently delivers a constant supply of steam at a steady velocity for a long period. Should these need to be replaced, it is easily done by removing the plugs "X" and "Y," and placing new parts in position. We have had these ejectors in service for between six and seven years. Our experience has shown that where the steam supply carries quantities of entrained water, that it is necessary to replace the orifice each year, while with drier steam we have had them in service for five years without replacement. The cost of this ejector complete is $4.25, and removable steam nipple, about $.30. Type "C" we designed as a cheaper article than "B". This proved to be superior to "A" inasmuch as it had a longer orifice in the nipple, which was made of brass instead of iron. This did not suffer greatly

PLA

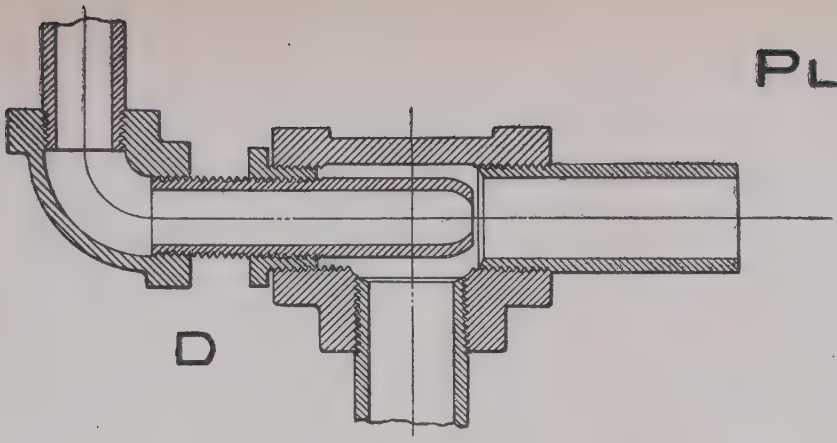

D

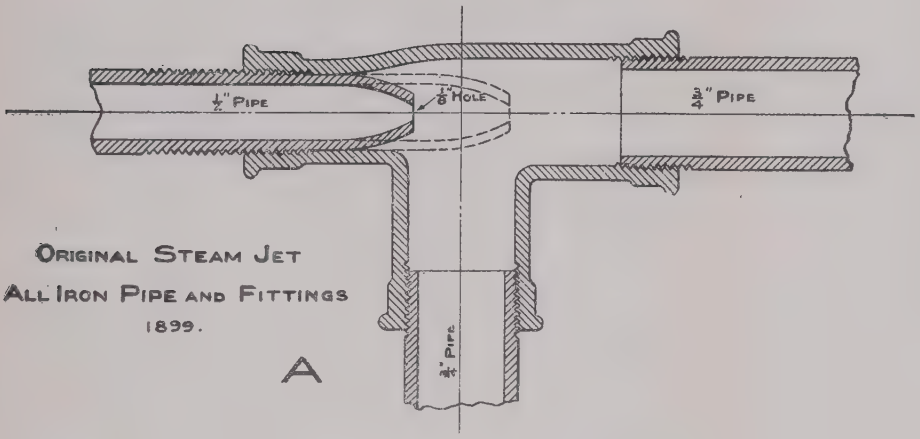

ORIGINAL STEAM JET
ALL IRON PIPE AND FITTINGS
1899.

A

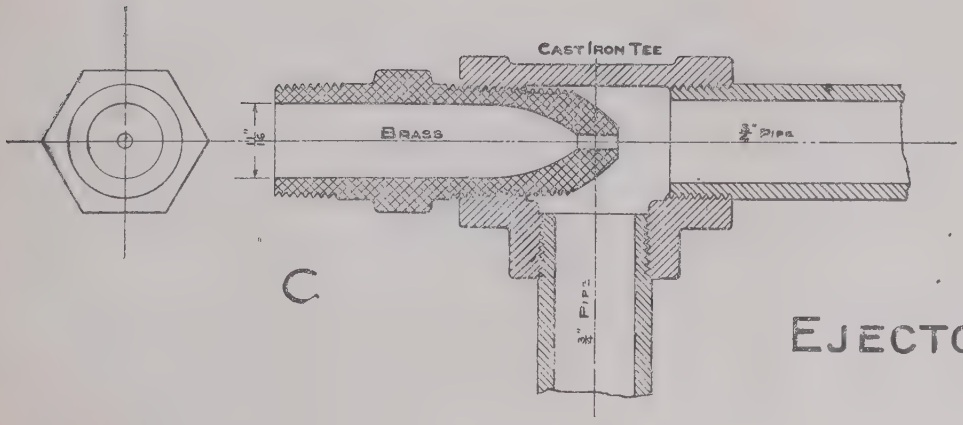

C

EJECTO

TE I

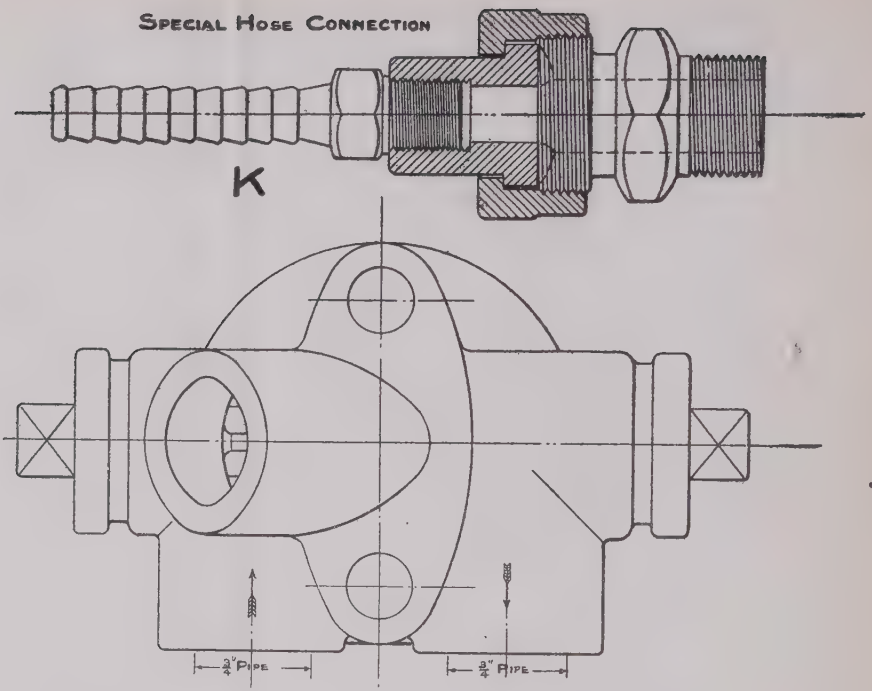

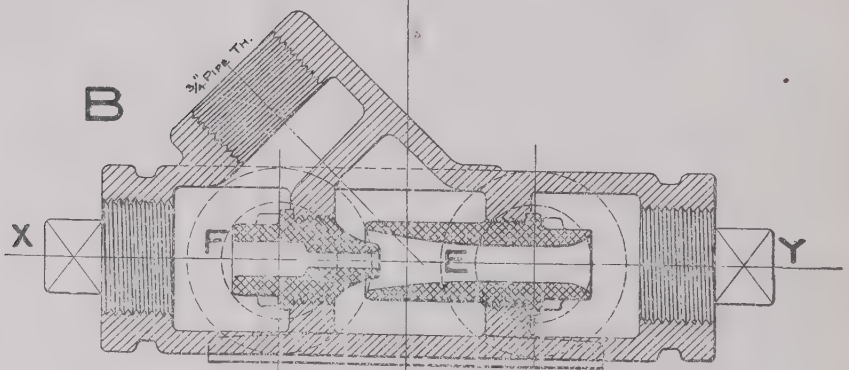

TYPES STEAM SYPHON

from deterioration, but we found further that "C" did not possess the efficiency as an ejector that "B" did. "B" would take up the water and discharge it at a rapid rate with but five pounds steam pressure, and continue to operate until the pressure was almost cut off. Type "C", on the contrary, would splutter at 18 lbs. and pick up only when 22 lbs. was reached. It ceased to operate at low pressures. We have therefore adopted type "B" as our standard ejector, inasmuch as it fills efficiently all the conditions that we originally asked in an ejector.

I will call your attention also to type "D". This shows an ejector made of wrought iron pipe, and was sent in with one of the replies to Question No. 17. This costs perhaps only one-third as much as type "B", with the time taken to make it, but our experience has shown that it uses the steam much less efficiently,—that the orifice wears away rapidly, increasing the amount of steam in proportion to the circulation,—is more difficult to take apart,—requires a higher steam pressure, and, in general, is a home-made device that should be replaced with a first class mechanical one, such as shown in this ejector.

Number and Position of Ejectors.

The number of ejectors necessary on a holder, and their position, is of course, as I have said, a matter which the Superintendents must decide for themselves, in accordance with local conditions. In holders between one and three million feet capacity, we have found that there should be eight ejectors in the tank. That is, this number provides a sufficient factor of safety, so that we are sure that in zero weather they will prove sufficient. Of these eight, four draw from the bottom and discharge half way up, and four draw half way up and discharge just below the surface. These alternate, around the tanks, the majority of them, however, being placed on the weather side. In the same manner we find that four ejectors for each cup are sufficient. The majority of these are also placed on the weather side.

In passing I may mention that where the holder is provided

with outside stiffening legs, which practically cut off communication between the bays, that an ejector should be provided for each bay.

Steam Hose.

The selection of the quality and kind of steam hose depends in a large measure on how it is proposed to put the steam in the cups and tanks. If the steam is to be simply blown in, without an ejector, long years of use give an undeniable standing to rubber hose; but if ejectors are to be used, rubber hose gives more trouble, on the whole, and is less satisfactory than metallic hose. It would not be proper to entirely condemn the use of rubber hose, even with the ejectors, since our experience has shown this variety to have been in use several years without trouble. On the whole, we find the metallic hose proves less troublesome than rubber. The principal difficulty with the use of rubber hose when using ejectors is that the inside disintegrates, causing small particles of rubber and canvas to clog up the steam orifice. It also suffers from outside deterioration, either by weathering or from coming in contact from time to time with holder oil. It stiffens and hardens during the summer months when in disuse, and must be frequently replaced.

The alternative is to use metallic hose. This, I think, will give general satisfaction, though it also has certain drawbacks, chief among which is the difficulty experienced in keeping it properly lagged. The manufacturers of this article have for years tried to find a covering which, while sufficiently flexible, would not char from the inside and would stand weathering. A covering that is a combination of rubber and canvas rapidly deteriorates; wool felt and silk felt both burn out in a short time. The most satisfactory covering which has been proposed up to the present time is made up of asbestos wick, wound closely and fastened securely with fine copper wire around the hose. While this is in the process of being tried out, as it were, it seems to show improvement over the other varieties experimented upon. There is one other point in regard to metallic hose which must be closely followed. It is necessary to use much greater precaution to prevent the hose from freez-

ing up than with rubber, inasmuch as it is almost impossible to lower the metallic hose from the holder and thaw it out successfully without seriously injuring it. On the contrary the rubber hose does not require such care, though of course that which the metallic hose requires is only what any good routine would demand.

After all is said, the metallic hose has proved that it is superior to rubber hose. I know of metallic hose which is in first class condition after eight years of continuous winter service,—while the best record for rubber hose with which I am acquainted is five years, and this is exceptional.

A point which might be mentioned in connection with metallic hose is the advantage shown by the use of ½ in. over ¾ in. This smaller size supplies ample steam for a single jet, yet does not subject the connections to as great a strain on account of its smaller weight. It does not leak or require as much repairing, and its original cost is less. With the use of ½ in. hose and with the improvements made in the couplings, the objection to metallic hose on account of leaky couplings is practically eliminated. The approximate prices are as follows:

¾ in. 5 Ply Rubber Steam Hose, 41½ cts. a foot.
¾ in. 4 Ply Rubber Steam Hose, 31½ cts. a foot.
½ in. 5 Ply Rubber Steam Hose, 33½ cts. a foot.
½ in. 4 Ply Rubber Steam Hose, 25 cts. a foot.

¾ in. Metallic Tubing with asbestos covering, $1.27 a ft.
½ in. Metallic Tubing with asbestos covering, .95 a ft.
¾ in. Metallic Tubing without covering, 1.20 a ft.
½ in. Metallic Tubing without covering, .90 a ft.
(Imported from England.)

There is also a metallic hose made in Germany, sold in this country at a lower price. I am not prepared to discuss in a paper of this character the relative merits of each.

From this it will be seen that the metallic hose costs about two and one-half times as much as the best grade of rubber hose,—that it can be counted on to last three times as long, while giving during the whole period more satisfactory service.

Steam Supply to the Holder.

Trunk Main.

In the main steam supply to the holder, two methods prevail. One is shown in the drawing accompanying the answer to the question. This shows a circular pipe hung from the tank gallery. In such an arrangement the method usually employed is to run the pipe from the boiler above ground to this circular ring and allow the condensation to drain back towards the boiler.

After a considerable experience with this method, I am led to believe that it can be improved upon. In addition to being subject to freezing, the fact that the lagging must be subject to weathering winter and summer is undesirable, and makes it difficult and expensive to keep it in proper condition.

There appears to be no pipe covering that will stand the heat of 50 lbs. steam pressure that will not be entirely ruined in a short time if it lays in water or is exposed to heavy rains. In order to prevent the moisture from entering the covering and in the lagging, it is necessary to cover the outside with canvas which, in turn, must be painted from time to time. The painting itself deteriorates the lagging, inasmuch as the oil from the paint cakes it. The inaccessibility of this pipe for repairs and said painting, is easily realized. Instead of this arrangement I suggest a thoroughly good job of underground steam piping. This means a line of steam piping encircling the holder underground so arranged that it will not have to lie in water from melting snow or heavy rains, and one that will be able to resist a fair amount of moisture without impairing its value. It also should be laid below the frost line.

We have experimented with various methods of laying this pipe, including Wyckoff Coverings Nos. 1 and 2 grade, placing the main inside of terra cotta—depending on dead air space lagging—inside of wooden boxes lagged with a mixture of coke breeze and pitch and with asphalt,—none of which have given us entire satisfaction. We have recently come across a method which is worth considering. This system is exploited by the H. W. Johns Manville Company, and is as follows:

Stone ware pipe sections are delivered, so scored that a gentle tap is sufficient to break them in two longitudinally the bottom half of this is laid, and at intervals Tees are placed locking down and firmly embedded in concrete. In these Tees are placed iron supports for rollers which hold the steam pipe to be run away from the bottom of the stone ware section. After the bottom sections are laid, the steam pipe is run, resting on the rollers. The whole line of pipe can then be tested. This being done, the space below and above the pipe is packed with asbestos sponge, and the upper pipe sections put on. This scheme also embraces an under drain of loosely laid terra cotta pipe. A steam main laid in this manner they claim to be well lagged and insured against moisture and ground water. Another suggestion is to lay the main in vitrified terra cotta pipe, testing each length of steam pipe before stringing the terra cotta pipe on it, and filling each length with lagging material, when in place; the main to be made concentric with the terra cotta pipe by means of supporting blocks. The whole is to be put in concrete. I should be very glad to hear any criticisms on this. As I have said before, I believe the underground steam pipe to be better than the overhead pipe running around the tank gallery, from the standpoint of economy, safety and convenience, though of course the initial cost is much greater.

Steam Distribution on the Holder.

There are several methods of distributing the steam to the jets. These are shown on Plate 2. First: To run one or more main risers and connect them to encircling pipes hung on each cup gallery, from which short connections are made to the various jets in the cup. Second: To run single risers at intervals around the holder, from which connections are made to jets placed above one another on the various cups. Third: To run a single riser from an underground main to a point just above the tank gallery to a manifold, from which point individual risers are run, each to a single jet—all of which are controlled from the manifold. The first and second methods I do not think recommend themselves because they are subject to freezing; the lagging becomes ineffective and rapidly deteriorates; the control of the steam of each jet

PLATE II.—METHODS OF STEAM DISTRIBUTION.

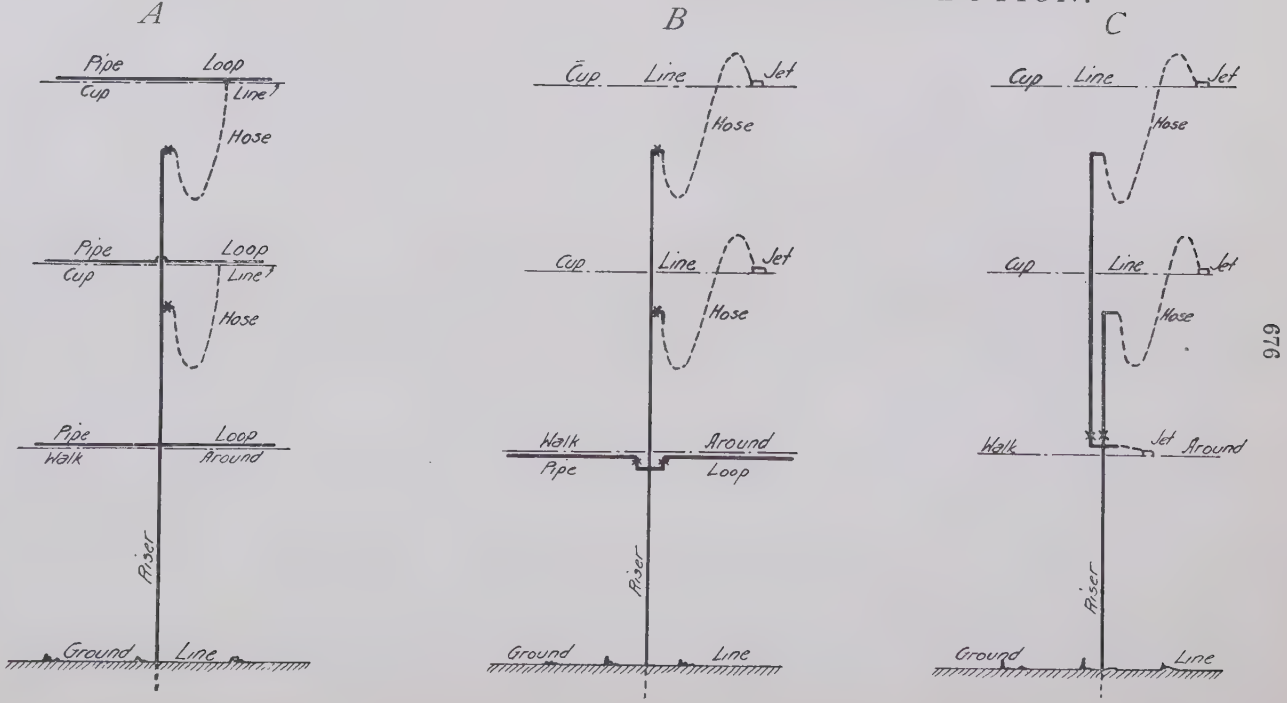

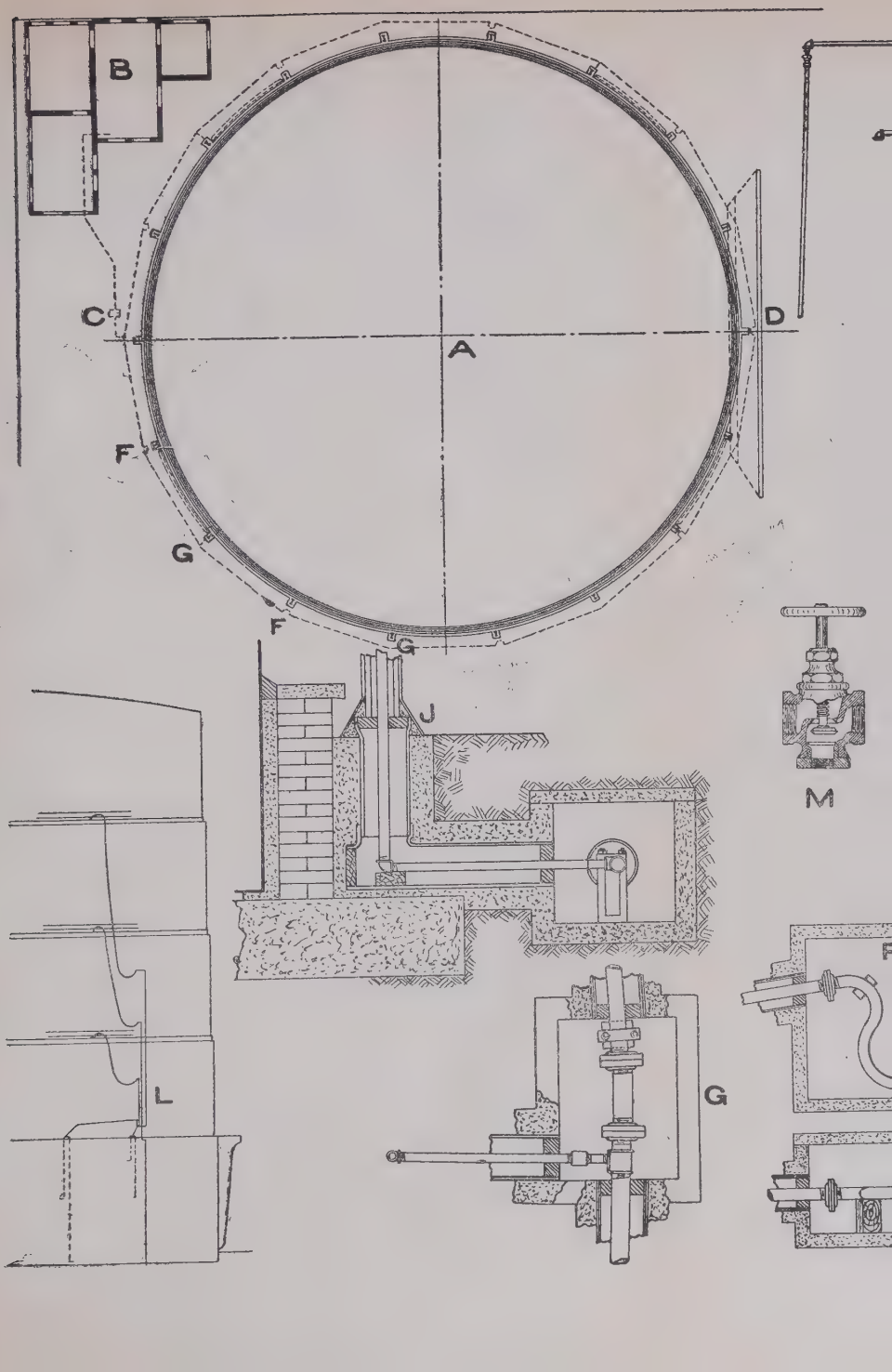
B
C
A
D
F
G
F
G
J
M
L
G
F

PLATE III

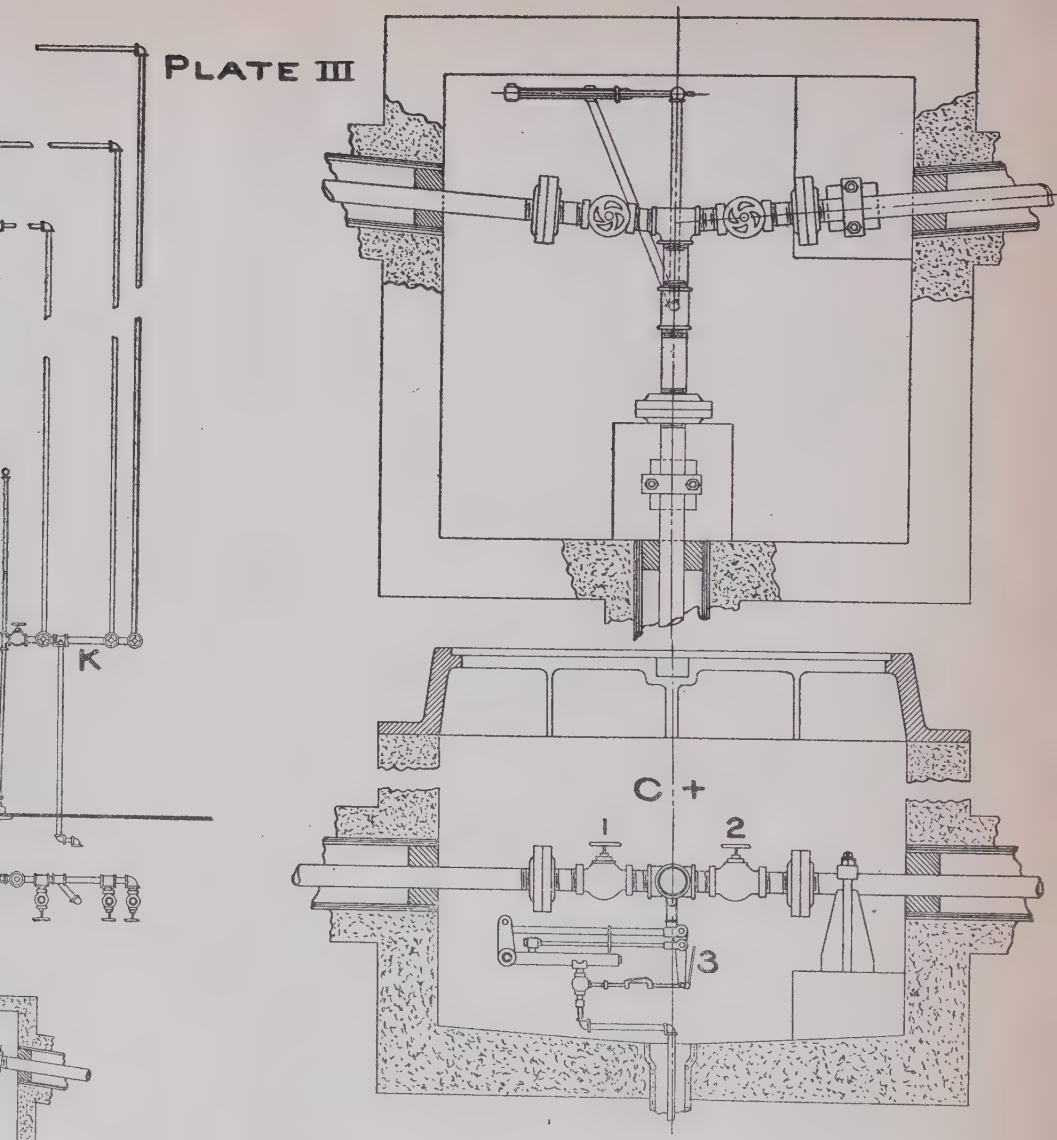

DETAIL
OF
HOLDER & CUP HEATING
FOR
3 M FOOT HOLDER

requires climbing on the part of the holder man to that point. The chief objection to these methods, however, is that they do not insure the delivery of steam to each jet in the quantity needed. With the second method it is also additionally likely that there may be a leak in the steam valve controlling supply to jet through a hose and the hose be frozen where the water in one cup requires heating, while another does not.

With running the single riser to each jet from the main manifold, it is possible for the holder man to control the steam to each and every jet on that portion of the holder from one point. It also enables him to drain each riser separately by the use of a three-way valve, and makes it positive that when the steam is shut off that there is no accumulation of condensation in the riser to freeze and give trouble. I will describe this three-way valve and its application a little later. These single risers are run to a point about midway between the highest and lowest position that the cup can possibly reach. At each point they are run over horizontally for a short distance and turned down. To these are attached one end of the hose, the other being attached to the jets on the cups. On the hand rail and firmly bolted to it is placed a saddle, in which the hose rests. This will be shown later. The purpose of this is to take the weight of the hose off the connections and to allow a very free movement either up or down without kinking or twisting. It also has the purpose of supporting the hose so that it can be kept outside the rail on one side, and inside on the other. On the whole, this method seems to be superior to the other two.

I have now discussed, in as much detail as our limited time allows us, the various methods for accomplishing the safe and economical heating of the cups and tanks of a holder For the sake of discussion of the subject, I will now show some details of the plan used for the heating of a three million foot holder recently erected in Philadelphia. While, of course, such a holder will never experience a temperature of 30° below zero, or probably a temperature below even zero, nevertheless I cannot see why the same principles cannot be applied on the holder that is mentioned in Question No. 17.

Plate No. 3 shows at "A" a cross-section of the holder, which

is 180 feet in diameter. The boilers, two in number, equipped with force draft to maintain a constant steam pressure, are located at "B". The main steam line is run to point "C", at which it branches and encircles the holder. This encircling steam pipe and the steam pipe from the boiler are laid so that the point "C" is the lowest point in the entire main. Point "D" on the opposite side is the highest point. At the lowest point, namely "C", the three mains are brought together, and connected by means of flanges. A detail of this is shown at "C+", which is a concrete manhole. The purpose of these flanges is to allow repairs to be made readily. The steam valves at "1" and "2" are shown controlling the passage of steam each way on the encircling pipe. The chief feature of this manhole, however, is the steam trap "3", which is an expansion trap, by which condensation in the entire steam system is removed.

Returning now to the plan of the holder, "A", it is necessary for the sake of economy, and to take up expansion, to lay this pipe in straight runs. In this instance the length of each run is about 32 feet. In a pipe of this character of course, it is necessary to supply expansion curves, and therefore necessary to also anchor the pipe at other points. "F" and "G" are alternately expansion curves and anchor points. A detail of the expansion curve is shown at "F", which you will see consists simply of a U shaped pipe bend. "G" shows a method used for anchoring, which consists of burying a wrought iron U shaped bar of iron in concrete, on which are slipped the castings to clamp the pipe in position. A detail of this is shown at "H". This entire steam main is to be laid, according to the plan of which I have spoken, in concrete covered terra cotta pipe. From this main steam line four main risers are taken. The method of running this pipe from the ground main is shown at "J". One feature of this is that the covering pipe, which projects from the ground, is cast iron instead of terra cotta. This is to prevent deterioration from frost which would ensue if the latter material were used. These risers are covered with material in three layers, consisting of moulded mineral wool in contact with the pipe, next ½ in. felt covering this, held in place by rawhide paper, outside of which is run a sur-

face retainer of rubber treated canvas or No. 27 copper. These risers are carried to a point on the holder shown at "K", from which the individual risers and the supply of steam to the cup syphons is run; a detail of this is shown at "K"-|-. In this you will notice the principal riser supplying the manifold: the secondary risers and the connections for the tank heating. The tank heating is accomplished as shown at "L", where one syphon is shown operating drawing the water from the bottom of the tank and discharging it in the center; the other, drawing from the center and discharging at the top. These two are placed a short distance apart. The one furthest from the manifold being carried on the cross girder and dropped down the next diagonal support.

The valves on this manifold are three-way valves. These provide a safe and effective means of draining the risers, inasmuch as, by closing the valve, a discharge is provided for the condensation which is positive. A detail of this valve is shown at "M". There is one feature of this valve which is worthy of comment,—steam on the riser must either be on or off,—there is no in-between. This enforces the holder man to cut down the number of jets, rather than the steam to each one, so that a jet cannot be supplied with an inadequate amount of steam to prevent freezing of the hose. There is also better circulation of the water in the cup if the same amount of steam is applied to few syphons rather than to many.

Plate 4 shows the installation of the jets on the cups and the connections between the jets and the steam risers in a little more detail. At "A" you will notice the riser turned down, upon which is connected a union, "B". The hose, "C", which is ½ in. metallic hose insulated with asbestos wick covering, runs outside the rail at "D", over the saddles "E" and connects to the jet "F". "G" shows the method of placing the jet on the cup. This is placed and held in position firmly by a jet support shown in detail at "H", firmly fastened to the dam. "J" and "K" show, respectively, the Inlet and Outlet connections, which are run into the side of the jet on an elbow allowing either or both to be pulled out of the cup water.

In this connection I might mention that the discharge on

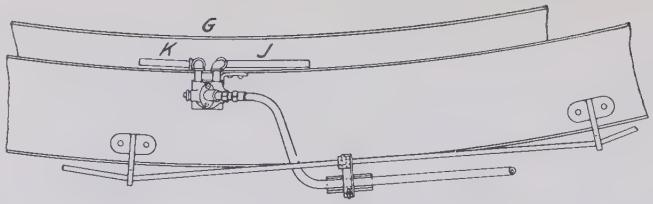

PLATE IV.—CUP JET AND CONNECTIONS

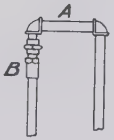

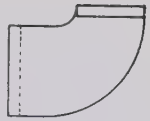

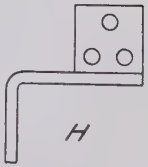

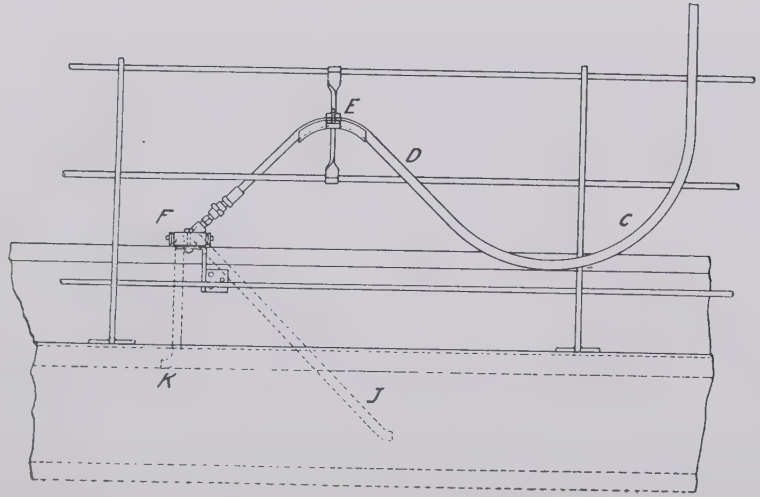

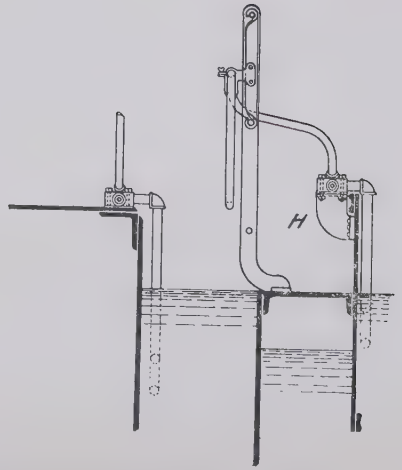

039

PLATE. V

THE UNITED GAS IMPROVEMENT COMPANY

P. M. D.—Form 191—12-'05

PHILADA. GAS WORKS

TEMPERATURE REPORT HOLDER No. 2 STATION Germantown Holder Feb. 1908

Date of Month	Time Taken	ATMOSPHERE: Kind of Weather	Direction of Wind	Velocity of Wind	Temp. top Holder	Temp. btm. Holder	TANK TEMPERATURES: Surface of Tank	3 ft. bel. Surface	15 ft. bel. Surface	25 ft. bel. Surface	Lower Jets on	Surface Jets on	CUP TEMPERATURES: Top Cup	Jets on	2nd Cup	Jets on	3rd Cup	Jets on	4th Cup	Jets on	GAS TEMPERATURES: 1 ft. bel. Crown	10 ft. bel. Crown	50 ft. bel. Crown	3 ft. abv. Water	3 ft. abv. Inlet	3 ft. abv. Outlet	REMARKS
1st	8am	Lt. Rain	S.E.	24	40	40	—	—	—	—	—	—	43	2	45	2	—	—	—	—	—	—	—	—	—	—	Steam off 10.30 A.M.
2nd	"				17	19	—	—	—	—	—	—	36	2	38	2	—	—	—	—	—	—	—	—	—	—	" on 11.00 P.M
3rd	"				26	28	40	40	39	38	4	2	38	2	39	2	—	—	—	—	34	34	35	36	37	36	
4th	"	pt. Cloudy	N.	10	15	17	—	—	—	—	—	—	39	2	39	2	—	—	—	—	—	—	—	—	—	—	
5th	"				21	22	42	42	40	40	3	2	39	2	39	2	—	—	—	—	36	36	38	38	39	39	
6th	"	Clear	N.	10	40	40	—	—	—	—	—	—	42	2	44	2	—	—	—	—	—	—	—	—	—	—	Steam off 9.00 A.M.
7th	"	Cloudy	S.W.	15	25	27	38	38	37	37	4	4	36	2	38	2	—	—	—	—	34	34	36	36	37	36	" on 12.00 M.
8th	"	Clear	N.W.	12	18	19	—	—	—	—	—	—	36	2	36	2	—	—	—	—	—	—	—	—	—	—	
9th	"	"	"	11	19	20	—	—	—	—	—	—	37	2	38	2	—	—	—	—	—	—	—	—	—	—	
10th	"	"	N.	2	30	30	40	40	39	39	4	4	38	2	38	2	—	—	—	—	36	36	37	37	38	38	Steam off 12.00 Noon
11th	"	"	N.W.	7	42	42	—	—	—	—	—	—	40	0	39	0	—	—	—	—	—	—	—	—	—	—	
12th	"	pt. Cloudy	N.E.	9	39	39	39	39	37	37	0	0	39	0	39	0	—	—	—	—	37	38	38	38	39	39	
13th	"	Lt. Rain	"	8	44	44	—	—	—	—	—	—	42	0	42	0	—	—	—	—	—	—	—	—	—	—	
14th	"	Cloudy	N.W.	5	48	48	43	39	39	39	0	0	41	0	44	0	—	—	—	—	68	68	68	66	66	66	
15th	"				52	52	—	—	—	—	—	—	50	0	50	0	—	—	—	—	—	—	—	—	—	—	
16th	"	Clear	W.	10	37	37	—	—	—	—	—	—	39	0	39	0	—	—	—	—	—	—	—	—	—	—	
17th	"	"	N.W.	"	30	31	34	34	33	33	4	4	34	2	34	2	—	—	—	—	35	38	40	40	40	40	Steam on 1.30 P.M.
18th	"	"	"	8	27	28	—	—	—	—	—	—	42	2	42	2	—	—	—	—	—	—	—	—	—	—	
19th	"	Snow Rain	N.E.	6	36	36	60	55	42	40	2	2	42	2	42	2	—	—	—	—	33	34	35	35	35	35	Steam off 12.00 M.
20th	"	Clear	N.W.	8	27	28	—	—	—	—	—	—	36	2	36	2	—	—	—	—	—	—	—	—	—	—	" on 2.30 P.M.
21st	"	Cloudy	S.W.	12	32	34	60	50	45	43	2	0	46	2	47	2	—	—	—	—	34	35	35	36	36	36	
22nd	"	Clear	N.W.	15	30	32	—	—	—	—	—	—	42	2	42	2	—	—	—	—	—	—	—	—	—	—	
23rd	"	Cloudy	S.E.	6	31	31	—	—	—	—	—	—	44	2	44	2	—	—	—	—	—	—	—	—	—	—	
24th	"	Clear	W.	6	26	26	55	50	42	40	3	0	42	2	42	2	—	—	—	—	38	39	39	39	39	39	
25th	"	"	S.W.	5	39	39	—	—	—	—	—	—	44	2	44	2	—	—	—	—	—	—	—	—	—	—	Steam off 1.00 P.M.
26th	"	Rain	E.	6	40	42	50	45	38	38	4	0	38	0	38	0	—	—	—	—	39	39	39	40	40	40	
27th	"	Clear	S.W.	10	38	40	—	—	—	—	—	—	40	0	40	0	—	—	—	—	—	—	—	—	—	—	" on 11.00 P.M.
28th	"	Cloudy	N.W.	15	21	22	50	42	42	40	4	2	34	2	34	2	—	—	—	—	34	34	33	33	33	33	
29th	"	Clear	"	5	22	24	—	—	—	—	—	—	38	2	38	2	—	—	—	—	—	—	—	—	—	—	

PLATE. VI

— HOLDER STATION BOILER FUEL —

— Germantown Station Phila. Works. —

—— THE UNITED GAS IMPROVEMENT CO. ——

— 2 Holders — Capacity No. 1 — 535 M. / No. 2 — 795 " } Total 1330 M.

BOILERS 2 HORIZONTAL TUBULAR 45 HP EACH

Month.	Coal burned per Day	Total per Month	Kind.	Av. Temp per Month.	Coldest Day Av. Temp.	Minimum Temp.
Dec. 1907	361 lbs	5 Tons	Buckwheat	39°	26°	21°
Jan. 1908	2457 "	34 "	"	35°	15°	9°
Feb. "	3940 "	51 "	"	31°	17°	5°
Mar "	717 "	10 "	"	45°	29°	24°
Ave.	1836 "			37.5°		

the jet, "K", is run but a short distance below the surface. In addition to this providing excellent circulation around the top water in the cups, it insures to some extent the cup from syphoning back through the hose in the event of any accident, inasmuch as the pipe would soon unseal itself. This is hardly true when the top cup is in its highest position, inasmuch as the constantly increasing pressure raises the water in the cup thus increasing the seal.

It may prove of interest in connection with this description to show a copy of the form used by the holder men to insure the maintenance of proper temperatures. This is shown in Plate 5. These datas are taken and recorded under instructions as issued from time to time by the Superintendent of Holder Stations. The chart speaks for itself.

Plate 6 shows the amount of coal used in heating tanks and cups of two holders at the Germantown Holder Station of the Philadelphia Works during the winter, 1907-1908, operating under such a system. Both of these holders are tank holders with a total capacity of 1,330,000 cubic feet. You will note that the average amount of fuel per day amounted to 1,836 lbs., and the total amount of coal for the four months 100 tons, Buckwheat grade. While this showing is not remarkable, I think you will agree that it shows economical operation. In addition, I may say that not once during the winter was there any indication of any ice formation. The coal used includes that for heating the valve and boiler house.

The President: I have to announce the Committee in force on the Beal Medal. You will remember that the rule is one adopted by the American Gas Light Association, with this additional provision, that if you cannot get past presidents enough from the Institute, you can fall back upon the American Gas Light Association. I have just been wondering if it would be legal for me to take the two past presidents and then get one out of the American Gas Light Association; otherwise I have got to appoint myself, which I am not anxious to do; but I presume that we will have to say that the three presidents of the American Gas

Institute will be on the Beal Medal Committee for this coming year.

We will now turn to the question of "Accidents."

We will hear from Mr. D. F. Burritt, under the heading of "Accidents."

GASHOLDER STRUCK BY LIGHTNING AND DESTROYED BY FIRE.

On August 5th, of this year, a gasholder of 300,000 ft. capacity, belonging to the Springfield Gas Light Co., Springfield, Mass., was struck by lightning at 3 o'clock in the afternoon and destroyed by fire. The holder and the building were a total loss.

The construction of the holder was two-lift with tank below the surface of the ground. It was surrounded by a circular brick building rising to the height of 54 ft. with a cone-shaped slate roof of the ordinary type, and with a large ventilating cupola at the top. The construction of the building was of the most substantial nature throughout, and was well protected by two lightning rods, which were apparently in good condition.

The bolt struck the cupola of the building and started a fire there, but just what other damage the lightning did in its passage to earth is not known. It is clear, however, that certain plates in the upper lift were either disrupted or dislocated and that some of the guides were injured so that the holder, which was nearly full, dropped out of line and blew at the cup seal, for a large quantity of gas was instantly liberated, which ignited by the fire in the cupola.

The intense heat created a heavy pressure within the holder building, resulting in throwing down the walls which fell outward, and also in further rupture to the holder shell.

The falling roof drove the holder into the tank with great force. The lower lift was so far out of line that it was caught on one side about two sheets above the bottom trucks each one cut the shell wide open from the point of contact on the top ends of the railroad iron guides in the tank, and

to the top sheets of the section. This lift was made of No. 10 iron.

The burning gas shot up over 250 ft. and looked like a gigantic Argand flame, the heat of which was felt over half a mile away. All of the 280,000 ft. of gas was consumed in a very short time.

After the gas had burned, the firemen quickly extinguished the fire in the woodwork of the wrecked building.

The falling walls nearly demolished the governor house and broke the moving parts of the governors. A part of the boiler house was also wrecked.

At the time of the accident the inlet valve of the holder was closed and the outlet valve open, but under control from the yard so that no trouble was caused by the connecting pipes.

Much trouble and annoyance was caused by quite a large quantity of brick being thrown into the tank and one of the cups of a 2,000,000-ft. holder nearby. The fourth, or bottom section, of this holder was down at the time. Several hundred brick and other material were thrown into the tank, lodging in the submerged cup, and forming in places a pile three or four feet high at the bottom between the tank and the lift. It was found necessary to let the holder down, cut a sheet out of the crown and send a diver down to remove the debris so that the section could be raised and landed without damage. This work the diver accomplished in two days. The holder was then raised to a point nearly ready to couple on the fourth lift and the brick taken out of the cup by the careful use of tools made for the purpose.

The total loss was about $35,000, and was covered by insurance.

Mr. Gartley: In Philadelphia we had an explosion of the dust in unloading gas coal. Inquiry did not develop that such an explosion had ever occurred in a gas works before, as far as we could learn. The conditions were exactly normal except that the coal had arrived without having met with any water from the time it left the mine and it arrived during the very dry weather in summer. It leaves an uneasy feeling in one's mind as to how near we may be to having coal dust

explosions at other times. I will not say anything more; if anybody wants any further information, I shall be glad to take up the matter with them by mail.

Mr. McKay: At my request the assistant engineer at our Everett Station prepared this statement of an explosion in a purifying box which occurred shortly after the box had been opened for removal of the oxide. (Reads paper.)

Explosion in Purifying Box at Everett Station of the Boston Consolidated Gas Co., April 4, 1908.

The No. 2 Purifying House at the Everett Station of the Boston Consolidated Gas Company, was put into operation December 9, 1907. This house contains a series of six purifying boxes 40 ft. by 40 ft. by 10 ft., which are so arranged that they can be used for either six or three layers of oxide. The piping system is such that the flow of gas through the boxes can be changed and the first box in series can be made the last, and the gas can be passed up through oxide where it had previously passed down, and *vice versa*. The No. 2 purifying house is used in connection with purifying house No. 1, which contains twelve boxes 40 ft. by 36 ft. by 7 ft., in eight of these boxes lime is used. As the unpurified gas enters the No. 2 purifying house first, it is not necessary or advantageous to remove all the hydrogen sulphide from the gas in that house.

The oxide used in No. 2 house consisted of the old oxide which had been discarded from the No. 1 purifying house as being past its usefulness. It was very heavy and in a finely divided state. When put in use December 9th, it weighed about 47 pounds per cu. ft. dry; the sulphur content at this time was about 36 per cent. in the dry sample. The oxide was used in three layers, each about 30 inches deep, which left about 6 inches in height for the gas spaces between the layers of oxide.

The boxes are provided with eight dumps in the bottom of the box, which are fitted with gas-tight covers. Over these dump holes there are no trays, so that when the cover is taken down the oxide directly over the cover is free to drop

into basement below, thus leaving a clear passage to shovel out the rest of the oxide in the box. Each dump has a flange on the inside of the box which projects up to the bottom of the lower layer of trays.

Between March 1st and March 22d, the experiment was tried of changing the flow of the gas every twenty-four hours. During this experiment the boxes were working very well in regard to the extraction of hydrogen sulphide, but the temperature of the gas while passing through the house was increasing quite rapidly. On March 22d the rise in temperature was 46 deg. F., an increase from 60 deg. F. to 106 deg. F. The effect of this increase of temperature on the process of purification was such that on March 26th No. 4 and No. 5 boxes, the hottest ones, were shut off, and the No. 5 box was emptied and refilled the following day. The oxide showed signs of the high temperature and there was some sparking during the process of emptying the box.

On April 4th, when dumping No. 4 box (it having been out of service, but under the gas pressure since March 26th), an explosion occurred. The gas had been shut off the box at about 8.30 a. m., and after the valves were tested and found tight, the box cover was lifted, the entire operation lasting, perhaps, fifteen minutes. Men then started taking down the dump covers; and as fast as the dumps were opened the men in the box cleared out the dump holes and started shoveling down the oxide. At this time the oxide showed some sparking, and at 9 a. m., when only six of the eight dumps had been opened and cleared, the explosion happened. After the explosion, the oxide in the box was burning quite rapidly, which made it necessary to wet it down thoroughly, to get rid of the sulphur dioxide fumes, so the men could finish emptying the box.

The high temperature of the oxide together with the difference in specific gravity between the gas and the cool air in the basement below the boxes probably caused quite a draught up through the dump holes, and the air so drawn into the box mixed with the gas in the spaces between the layers of oxide, and finally, having reached an explosive mixture, was fired by the sparking oxide which was being shoveled down

the dump holes. The time intervening between the removal of the box cover and the explosion was sufficient under ordinary conditions for the gas to have been entirely displaced by air, but owing to the density of the oxide, and the flange of the dump preventing a rapid interchange in the lower compartment, this state was not reached and an accident resulted.

The analysis of the oxide in the box showed 48.5 per cent. sulphur; the oxide weighed 54 pounds per cu. ft. dry; when dumped it was very dry and very fine.

In order to prevent such an accident happening again, each box has been provided with three 1½ in. steam connections which allow steam to be blown into the gas spaces between the oxide layers. Steam under about 80 pounds pressure is turned on as soon as the cover is taken off the box, and is allowed to blow until the dumps are all opened and cleared out; this prevents any sparking while the gas is being displaced by the air.

From the time this purifying house was put in operation up to the day of the explosion, there had been twelve boxes emptied; from April 4th to October 15th, 1908, there have been fifteen boxes dumped, but by use of steam as described above, we have had no further trouble.

The President: Gentlemen, we are rapidly approaching the time for adjournment, although the final adjournment will take place to-morrow afternoon about 6 o'clock.

I want to give notice to the incoming Board of Directors, owing to the fact that I can reach most of them now, that it is their duty, immediately after the final adjournment Saturday evening, upon the return from West Point, to meet and appoint from their own number a Finance Committee of three, according to the Constitution, Section 33, and a Membership Committee of five, according to By-Law No. 3. This is necessary for the proper conduct of the business.

Before closing, I again want to express the hope, from my experience gained in this, and in many other meetings, that the Directors and Technical Committee will insist that the papers shall come in not later than the first of September, and that they will also insist that the papers shall be accompanied by abstracts, and that such abstracts will be

viséd by the Technical Committee so that they will properly represent the essential features of the paper, and serve to guide the minds of the members back to what they have read. Furthermore, that the Directors will establish the rule definitely that each member will be entitled to five minutes for discussion and five minutes only, until all have had a chance, and that if anybody wants to hand in any written discussions, those will also have to be abstracted, so as to keep them down to five minutes, or the written abstracts can be handed in subject to revision by the Publication Committee, as everything else is subject. I simply make these announcements now so as to have it understood that I am going to bring it up in the Board, so that the men who do not agree with me will have an opportunity to make their protests.

In the old days, gentlemen, I believe it was the custom for us to take up considerable time in the passing of a number of more or less perfunctory resolutions of thanks. I do not think that any resolutions that we could pass to-day would adequately express the sense of obligation that we are under to the men who have made this meeting a success. I want to particularly call attention to the work done by Mr. Bump, as editor of the Wrinkle Department; the Committee of Revision of the Question Box, Messrs. Shattuck, Klumpp and Stone; the work done by the Membership Committee, Messrs. H. D. Whitcomb, Jr., James T. Lynn, F. W. Stone, K. M. Mitchell and J. A. Norcross; and the work of the Public Relations Committee—for although the latter have not been able to report much work done, it may be that they have had a good deal to do in deciding not to do anything—Messrs. Cowdery, Copley, Prichard, Gribbel, Donald McDonald of Louisville, Ky., and Walton Clark; and perhaps it would not be unfair to lay particular stress upon the work done by the Technical Committee—Messrs. Gartley, A. S. Miller, Baehr, McKay, Brown and Glasgow. I doubt if any of you can appreciate the work that has been done by these men, especially by the last committee, and I want to say that without their assistance, as far as I can see now, this meeting would have been a failure.

Our special thanks are due to the Electrical Testing Labora-

tories for their very interesting exhibit of photometric appliances.

I suggest that we ought to express our thanks to those who have taken upon themselves the actual arrangements for this meeting. Without mentioning names, as they all appear on the back of your programs, I think that we all should feel grateful to these men, especially to Mr. Addicks, who, by exercising that ability for executive work which he always displays, split the work up amongst a number of sub-committees and then demanded that they should do their work. The demand, however, was unnecessary, because they all appeared absolutely willing to do their work. I think you all agree that the sub-committees of the Arrangement Committee have admirably performed the work put upon them. (Cries of Hear! Hear!)

Our thanks are due especially to the Consolidated Gas Company, the Brooklyn Union Gas Company, the New York Edison Company, the Interborough Rapid Transit Company, and the Manhattan Railway Company, and to the authorities of West Point, who have gone out of their way to make special provisions for our complete pleasure tomorrow, a most unusual provision, placing at our disposal a very large number of seats for the football game.

I want, therefore, to be put on record that the Institute is indebted to these men who have so strengthened the work during the past year as to make this meeting a success, and apart from that I wish to express, in language that is entirely insufficient and inadequate for the occasion, my personal thanks that they have enabled me to perform in some measure at least my duty to this Institute.

Mr. Donald McDonald, of Louisville, Ky.: I move that the Institute by a rising vote, adopt the various complimentary and appreciative remarks which you have made, Mr. President, upon the work of these various committees, as the unanimous sentiment of the Institute.

The motion was seconded.

THE PRESIDENT: You have heard the motion of Mr. Donald McDonald. All in favor will please rise.

The convention arose.

THE PRESIDENT: I declare the motion carried unanimously. The meeting will now take a recess until to-morrow at 6 o'clock p. m.

MR. ADDICKS: Just a word, gentlemen. I do not see how we can adjourn for the day, without putting on the record the appreciation the members have for the work done by President Alexander C. Humphreys. I understand he does not want this put on the record, but I say he shall hear it even if he does not care for it. I want to say that I realize, from personal contact with him, the busy man that he is, and the amount of work and force it takes to carry on a work of this kind; and I want further to put on the record my feeling that it is a great pity that there is a By-Law in the Constitution that prevents the President being elected for a second term. (Great applause.)

APPENDIX TO PROCEEDINGS

OF THE

AMERICAN GAS INSTITUTE

1908

In Memoriam.

✠

B. F. ELLISON

Superior, Wis.

Died September 1st, 1908

H. W. SEXTON

Anniston, Ala.

Died July 1st, 1907

(Not reported in time for records of year 1907)

✠

BENJAMIN F. ELLISON.

Born, 1853. Died, 1908.

Benjamin F. Ellison was born 55 years ago in Utica, N. Y. His parents were Welsh, and soon after his birth returned to England. He came back and settled in this country when about 18 years old. For many years he was engaged in railroad work, in the employ of the New York Central R. R. About fifteen years ago he moved to St. Paul, Minn., and was connected with the gas company there for several years. In 1899 he was Secretary and Treasurer of that company.

About 1900 he became General Manager of the Superior Water, Light & Power Company, of Superior, Wisconsin, which position he held at the time of his death.

Mr. Ellison was a member of the Wisconsin Gas Association, and joined the American Gas Institute in 1906. He was prominent in public affairs and belonged to several fraternal organizations.

H. W. SEXTON,

Anniston, Ala.

No further information is available than that Mr. Sexton had been Treasurer and General Manager of the Electric and Gas Company at Anniston, Ala., for about nine years. He joined the Ohio Gas Light in 1905, and became a charter member of the American Gas Institute in 1906.

DESCRIPTION OF EXHIBIT.

A Technical Exhibit was held, in the lobby adjoining the Meeting Room, during the course of the Sessions.

This exhibit showed:—

1st. A demonstration of the color value of different Illuminants.

2nd. A collection of different types of Photometers.

The demonstration of the color value of different illuminants consisted of a large booth, divided into nine small compartments, each about three feet deep by two feet wide, and extending from the top of the booth to an inclined table about thirty inches from the floor. The booth consisted of a wooden frame work covered by asbestos board and painted a dead black. Each compartment contained a different source of illumination, and was so constructed that the illumination of one compartment would not interfere with that of the others. A number of strips of different colored silks, running from end to end of the booth, and through each compartment, were arranged on the table so that the same silks were shown in each compartment. The sources of illumination were either suspended by a rope and pulley, or by a flexible tubing, so that by raising or lowering the source of illumination a variation in the intensity of illumination of the plane to be illuminated could be easily produced. Each compartment was also supplied with an independent switch, or valve, so as to cut out any source at will.

The sources of illumination used, and in order of their installation, were as follows:

1. Open flame gas.
2. Ramsdell Inverted Incandescent Gas.
3. Welsbach Inverted Incandescent Gas.

4. Day-light.
5. Tungsten Filament Electric Incandescent.
6. Carbon Filament Electric Incandescent.
7. Nernst Lamp.
8. Electric Enclosed Arc.
9. Cooper-Hewitt Mercury Vapor.

Each of the above artificial sources was suspended at a distance above the plane to be illuminated so that the illumination on the said plane would be approximately the same in each compartment, and equal to a value previously decided upon. This distance was determined by calculation, and data from the light distribution curves of the different illuminants. After this was done a Sharp-Millar Illuminometer was placed in each compartment, and the source of illumination raised or lowered until the intensity of illumination on the plane was equal to that desired.

In the case of the day-light compartment, the walls were lined with plain white paper. The window back of the booth was also covered with this same paper, so as to produce a more even distribution of light. The illumination in this compartment was adjusted for a clear sky, and no attempt was made to change this, following the weather conditions or time of day.

The collection of different types of photometers consisted of a flicker photometer, a Lummer-Brodhun photometer and a Bunsen photometer, mounted on a standard bar; a Sharp-Millar photometer and an Eighteen Inch Integrating Sphere, equipped with a Sharp-Millar photometer. The Ives Colorimeter, an instrument for the measurement of all colors in terms of percentage of the three primary colors, red, green and blue, was also shown. All these instruments were in operation, and explanations as to their use were given by men expert in their manipulation.

TENTATIVE SYSTEM OF ACCOUNTS

ISSUED BY THE

PUBLIC SERVICE COMMISSION

OF THE

STATE OF NEW YORK.

The preparation of a standard scheme of accounts for gas corporations is undertaken jointly by the Bureaus of Statistics and Accounts of the Public Service Commissions for the First and Second Districts, in pursuance of the authority conferred upon the Commissions by sub-section 4 of section 66 of the Public Service Commissions Law, which reads as follows:

§ 66. General powers of commissions in respect to gas and electricity.—Each commission shall within its jurisdiction:

* * * * * * * * * * *

4. Have power, in its discretion, to prescribe uniform methods of keeping accounts, records and books, to be observed by the persons, corporations and municipalities engaged in the manufacture, sale and distribution of gas and electricity for light, heat or power.

"Gas corporation" is thus defined in section 2 of the statute:

"The term 'gas corporation' * * * includes every corporation, company, association, joint-stock association, partnership and person, their lessees, trustees or receivers appointed by any court whatsoever, owning, operating, managing or controlling any plant or property for manufacturing and distributing and selling for distribution or distributing illluminating gas (natural or manufactured) for light, heat or power."

Gas operations, as the term is hereinafter used, include all acts and transactions directly connected with the operation of a plant for the production of artificial gas, the transmission thereof and the supply thereof to consumers for light, heat, or power, and all operations incident thereto, including the collection of revenues therefor and the disposition of by-products produced in connection therewith.

SCHEDULE A.

BALANCE SHEET OR INDICANT ACCOUNTS.

All accounts kept by any corporation or person within the scope of the present order shall after this order becomes effective be kept by the double-entry method.

DEFINITIONS OF CAPITAL ACCOUNTS.

As the term is used herein, by *capital* of a corporation is meant all property devoted to the rendering of the services or the production of the commodities which are within the purposes of the corporation.

Capital which has an expectation of life in service of more than one year (exception being made of hand and other small portable tools liable to be lost or stolen*) is called fixed capital.

Capital other than fixed capital is called floating capital.

Fixed capital is divisible into general capital and departmental capital, general capital being that which is indiscriminately available for the uses of two or more classes of operations, while departmental capital is that assigned solely or principally to a single class of operations.

Fixed capital is also divisible into landed capital and non-landed capital.

Landed capital includes all interests in land (exclusive of improvements thereon), the term of which is more than one year.

Non-landed capital is divisible into intangible and tangible.

Intangible capital comprises organization, franchises, patent rights and all other intangible property, within the definition of fixed non-landed capital as above stated.

Tangible capital comprises structures and equipment having an expectation of life in service of more than one year. Because of their liability to loss or theft, hand and other small portable tools are excepted from tangible capital, and the cost of such tools when issued is required to be treated as a part of the operating expenses.*

Capital is also divisible into original capital, additions, betterments and renewals and replacements.

Original capital is that put into service at the outset of an enterprise.

Additions include additional structures, facilities, or equipment not taking the place of anything previously existing.

Betterments include the enlargement or improvement of existing structures, facilities and equipment.

Renewals include all extensions of terms of years in land and in tangible fixed capital, and all extensions of the life period of franchises and other intangible fixed capital.

Replacements include all substitutions for capital exhausted or become inadequate in service, the substitutes having substantially no

*Hand and other small portable tools liable to be lost or stolen shall, when first acquired and before issued for use, be carried in a suitable Materials and Supplies account; when issued they shall be charged to the appropriate expense account. Portable tools and apparatus of special value may, however, be charged to the appropriate tangible capital account, and remain therein so long as record is kept of the persons to whom such tools and apparatus are issued and such persons are made responsible therefor.

greater capacity than the things for which they were substituted. When a substitute has a substantially greater capacity than that for which it is substituted, the cost of substitution of one of the same capacity as the thing replaced should be charged as a replacement, and the remaining portion of the cost of the actual substitute should be charged as a betterment.

Every charge made to a capital account on or after [July 1, 1908,] shall show whether the thing in respect of which the charge is made is original capital or an addition, a betterment, a renewal or a replacement. If the thing is a betterment, the corresponding entry shall designate the thing enlarged or improved and shall cite by name and page of book or other record the original entry of cost of such thing enlarged or improved. If the thing to which any charge hereafter made relates is a renewal or a replacement the entry made in respect thereof shall designate the thing renewed or replaced and shall cite by name and page of book or other record the original entry or entries of cost, of such thing renewed or replaced, and in connection with such entry of the renewal or replacement shall be made an entry crediting the amount at which the thing renewed or replaced stood charged in the capital account at the time of its renewal or replacement. If there is no entry in the accounts of the corporation showing the cost (to the corporation) of the thing bettered, renewed or replaced, that fact shall be stated in the entry describing the betterment, renewal or replacement, and the original cost of such thing to the corporation shall be stated. Such cost shall be estimated if not known, and when estimated the basis of such estimation shall be shown.

If any betterment involves the partial destruction or partial reconstruction of the thing bettered, only such portion of the cost of the change shall be charged as a betterment as will when added to the original cost (estimated if not known) of the thing bettered give the cost of reconstruction or replacement of the thing as bettered and the remainder of the cost of the change (account being taken of any salvage) shall be charged to the appropriate repair account; *e. g.*, a building, original cost unknown but estimated to be $15,000, is bettered by the construction of an elevator shaft and its stairways are modified so as to be fireproof; the actual expenditure for these changes is $3,000; the estimated cost of replacement of the building (as modified) with one equally serviceable and with an equal expec-

---

Note—When through wear and tear or through casualty it becomes necessary to replace some part of any structure, facility, or unit of equipment, and the extent of such replacement does not amount to a substantial change of identity in such structure, facility or unit of equipment, the replacement of such part is to be considered a repair and the cost of such repair is to be treated as an operating expense and must not be charged as a replacement in any capital account.

tation of life is $16,000; the charge to capital account as a betterment should be $1,000, and the remainder ($2,000) of the expenditure, should be charged to the appropriate repairs account.

When anything is withdrawn from service, the amount at which such thing stood charged in the capital account shall be credited to the capital account in which it stood charged at the time of withdrawal, and the entry of such credit shall cite by name and page of the book or other record the original entry of cost of the thing withdrawn. If there is no such original entry that fact shall be stated in connection with the credit entry, and the actual amount originally charged shall be credited. If such amount is not known, it shall be estimated, the facts upon which the estimate is based shall be shown, and the amount thus estimated to be the original charge in respect of such thing withdrawn shall be credited.

Throughout all capital accounts, the first entry in respect of any particular thing shall describe it with such particularity as to enable its identification, and shall give it a distinguishing name, number or other designation by which it shall thereafter be designated in every entry in any account which in any way concerns it.

All charges made to capital or other accounts on or after [July 1, 1908,] shall be the actual money cost of the things in respect of which they are made. When the consideration actually given for the thing in respect of which a charge to a capital account is made is anything other than money, the actual consideration shall be described in the entry with sufficient fullness and particularity to identify it and the amount charged shall be the actual money value of such consideration at the time of the transaction.

Discounts upon securities and other commercial paper issued in payment for capital are to be provided for in other accounts and must in no case be charged to the capital accounts.

Cost of labor includes not only wages, salaries and fees paid employees, but also such personal expenses of employees as are borne by the corporation.

Cost of materials and supplies consumed in construction is the cost at the places where they enter into construction, including transportation and inspection. If such materials and supplies are passed through storehouses at or near the place of construction their cost is the cost in store increased by a suitable proportion of store expense.

FIXED CAPITAL ACCOUNT, JUNE 30, 1907.

To this account shall be charged all the Fixed Capital of the accounting person or corporation devoted to gas operations as such capital stood on June 30, 1907. Such charge shall be made at the figures at which such capital was carried on the books of

the said person or corporation on that date. When any capital included in such account is retired from service, the amount at which it is charged therein shall be credited to this account and shall be concurrently charged to the Corporate Surplus or Deficit account (or equivalent account carried on the books on June 30, 1907), unless there was carried on the books at that date a reserve to cover retirement of capital from service in which case the said concurrent charge shall be made to such retirement reserve account. If the amount at which the said capital in service on June 30, 1907, and subsequently retired from service was included in the said account, is not disclosed on the books and records of the accounting person or corporation and is not within the knowledge of such person or corporation or officers or other employees thereof, it shall be estimated, and such estimated amount shall be treated as is above directed for the actual amount, the fact of estimation being stated in the entry.

In addition to the accounts later provided herein and in connection therewith, there shall also be kept the following record:

REGISTER OF FIXED CAPITAL INSTALLED SINCE JUNE 30, 1907.

Under the above title there shall be kept a record whereon there shall be shown in chronological order of installation every item of capital installed in service subsequent to June 30, 1907. The entry in respect of each item shall show the date of installation, the date of the entry, the actual money cost of the item (including cost of installation), and the description of the item with such particularity as to enable the identification thereof (giving, in case the item is movable, the name of the manufacturer and the identifying mark or number, if any, imprinted thereon, and such other particulars as may be necessary for identification). If the said item was acquired for a consideration which was in whole or in part something else than money, such consideration shall be described with sufficient particularity to identify it, and the actual money value of such consideration shall be stated, as well as the amount of actual money, if any, given in addition to the said consideration other than money. There shall also be shown the name of the person or corporation from whom the said item of capital was acquired, and the names of all agents, if any, through whom the contract of acquisition was negotiated. Where two or more items are acquired under a single undivided contract, the entry in respect of each shall refer to the others and shall state the entire consideration, and shall also state the portion thereof fairly appli-

cable to the particular item covered by the entry. Each item shall be given its distinguishing serial mark or number by which it shall be designated in every entry relating to it thereafter made in any account or record of the said person or corporation. When any item of capital shown upon this register is withdrawn from service, the date of withdrawal shall be added to the entry relating to such item.

In the case of continuous structures (including herein all stationary construction) like trunk lines, gas mains and services, such structures shall be itemized to the extent that no item shall contain more than one operating division or more than one type of construction, and the entry in relation to any item shall describe the size, weight, type, and other principal physical characteristics of the chief constituent parts, together with their spacing if discontinuous.

The following capital accounts are intended for transactions subsequent to June 30, 1907:

LAND DEVOTED TO GAS OPERATIONS.

To this account shall be charged the cost of the corporation's interest in land (exclusive of improvements thereon) devoted to gas operations as hereinbefore defined. This includes land occupied by gas-producing works and their appurtenances, rights of way for distribution lines, land occupied by outlying holder stations, and all other lands devoted to and reasonably necessary in the economical and efficient conduct of gas operations, the rights or interests in which land have lives in excess of one year from the date when such land is placed in service. Such cost includes, *when assumed or paid by purchaser in its own behalf,* (a) cost of registration of title, (b) cost of examination of title (c) conveyancer's and notary's fees, (d) purchasing agent's commissions or fees or proportion of purchasing agent's salary, (e) taxes accrued to date of transfer of title, and (f) all liens upon the title acquired. If at the time of acquisition of such interest in lands it extends to buildings or other improveporation to its gas operations, and the contract of acquisition does not determine the price of such improvements, they shall ments thereon, which improvements are devoted by the corbe appraised at their fair cash value for use in gas operations and such appraised value shall be charged to the appropriate structures account and excluded from the account "Land Devoted to Gas Operations." If such improvements are not devoted to gas operations, but are devoted to other operations or held as investments the cost (or appraised fair cash value for the purposes to which devoted, if the cost is not determined in

the contract of acquisition) shall be charged to the appropriate investment account or capital account for other operations. If the improvements are removed or wrecked, the salvage (less the cost of removal or wreckage) shall be excluded from the account "Land Devoted to Gas Operations."

The entries in this account must be made in such wise as to enable the corporation to show in its annual report to the Public Service Commission the subdivision of the cost of its land devoted to gas operations into the following:

Land Occupied by Gas-producing Works.
Land Occupied by Outlying Holder Stations.
Rights of Way .
Other Land Devoted to Gas Operations.

ORGANIZATION.

To this account shall be charged (a) all fees paid to governments for the privilege of incorporation and (b) all office and other expense incident to organizing the corporation or other enterprise and putting it in readiness to do business. This includes (c) cost of preparing and distributing prospectuses, (d) cost of soliciting subscriptions for stock (but not for loans, nor for the purchase of bonds or other evidence of indebtedness), (e) cash fees paid to promoters, and (f) the actual cash value at the time of organization of securities paid to promoters for their services in organizing the enterprise, (g) counsel fees, (h) cost of preparing and issuing certificates of stock, and (i) other like costs. Like costs incident to (j) preparing and filling certificates of authorization of increase of capital stock, and to the (k) negotiation and issue of stock thereunder, shall be classed as additions. Cost of (l) preparing and filing certificates of amendment of articles of incorporation shall be classed as a betterment. Cost of (m) preparing and filing papers in connection with the extension of the term of incorporation or with reincorporation consequent upon reorganization shall be classed as a renewal. This account shall not include any discounts upon stocks or other securities issued nor shall it include any costs incident to negotiating loans or selling bonds or other evidence of indebtedness.

FRANCHISES (GAS).

To this account shall be charged "the amount (exclusive of any tax or annual charge) actually paid to the State or to a political subdivision thereof as the consideration for the grant of such franchise or right as is necessary to the conduct of the corporation's gas operations. If any such franchise is acquired by mesne assignment, the charge to this account in re-

spect thereof must not exceed the amount actually paid therefor by the corporation to its assignor, nor shall it exceed the amount specified in the statute above quoted. Any excess of the amount actually paid by the corporation over the amount specified in the statute shall be charged to the account "Other Intangible Gas Capital." If any such franchise has a *life of not more than one year after the date when it is placed in service,* it shall not be charged to this account, but to the appropriate accounts in "Operating Expenses," and in "Prepayments" if extending beyond the fiscal year.

Payments made to the State or to some political subdivision thereof as a consideration for granting an extension for more than one year of the life period of a franchise shall be classed as renewals. Those made as a consideration for franchises or extensions thereof covering additional territory to be operated as a part of an existing system shall be classed as betterments. If the franchises cover separate and distinct new enterprises, the payments therefor shall be classified as original.

Annual or more frequent payments in respect of franchises must not be charged to this account but to the appropriate tax or operating expense account.

PATENT RIGHTS (GAS).

To this account shall be charged the cost of all rights (having a life of more than one year from the date when placed in service) acquired by the corporation in or under valid patents granted by the United States to inventors for inventions and discoveries which are necessary to the economical conduct of the corporation's gas operations. If any such right is extended to cover a further period of time than that covered by the original grant, cost of such extension shall be classed as a renewal. A patent right acquired for use in an existing system and necessary to the economical operation thereof shall be classed as an addition.

OTHER INTANGIBLE GAS CAPITAL.

To this account shall be charged the cost of all other property coming within the definition of intangible capital and devoted to gas operations. All entries of charges to this account shall describe the property acquired with sufficient particularity clearly to identify it, and shall also show specifically the principal from whom acquired and all agents representing such
in the transaction, also the term of life of such property, estimated if not known, and if estimated, the facts upon which the estimate is based.

WORKS AND STATION STRUCTURES.

To this account shall be charged the cost of all structures at works devoted to the production of gas, including purification and all other processes performed upon such gas antecedent to its entrance into the station holder. Such structures include (a) retort houses, (b) purifier houses, (c) engine houses, (d) boiler houses, (e) coal sheds and other structures for storage of fuel to be consumed or carbonized in the production of gas and the operations auxiliary thereto, appurtenant (f) walks, (g) fences, (h) drives, (i) tramways, (j) trestles, etc., and all fixtures permanently attached to such structures and made a part thereof. Foundations and settings for furnaces and boilers, steam engines, gas engines, pumps, generators, benches, condensers, washers, scrubbers, purifiers, etc., shall not be included herein. Such foundations and settings and the apparatus and machinery to which they pertain are not intended to be included under the term fixtures as above used. Nor shall gas holders be included in this account.

HOLDERS.

To this account shall be charged the cost of all holders at works and outlying stations, including tanks, foundations, holders, framework, pulleys, etc., and inlet and outlet valves of such holders.

FURNACES AND BOILERS (GAS).

To this account shall be charged the cost of all furnaces and boilers devoted to the production of steam for use in connection with the production of gas and its delivery to the station holder. This includes the (a) foundation and settings of such furnaces and boilers and (b) appurtenant grates and (c) flues leading to smokestacks and chimneys; also (d) boilers and (e) valves thereto attached. It also includes (f) mechanical stokers and other like apparatus for regulating the supply of fuel, but does not include (g) water pipes and (h) pumps and (i) injectors, nor (j) steam pipes for the conduction of steam from boilers to the generators.

PRIME MOVERS (GAS).

To this account shall be charged the cost of all steam engines, gas engines and other prime movers located at works or holder stations, and devoted to the production or distribution of gas. This includes the foundations and settings of such engines. The engine shall be considered to include the throttle or inlet valve and the governor, but not the pipe leading from the boiler or gas holder, nor the exhaust pipe.

BENCHES AND RETORTS.

To this account shall be charged the cost of all benches and retorts devoted to the production of coal gas. This includes the cost of foundations and settings.

GAS GENERATORS.

To this account shall be charged the cost of all generators devoted to the production of water gas. This includes the cost of foundations and settings.

PURIFICATION APPARATUS.

To this account shall be charged the cost of all equipment apparatus, such as washers, scrubbers, purifiers, etc., and their ancillary apparatus, including the cost of foundations and settings.

ACCESSORY EQUIPMENT AT WORKS.

To this account shall be charged the cost of all equipment at works and holder stations, which is not includible under any of the last six foregoing accounts. This includes (a) condensers, (b) exhausters, (c) station meters, etc., (d) apparatus for charging retorts and generators, (e) conveyors for moving coal and other fuel, and those for the disposition of coke, of ashes, cinders and other products and residuals, (f) tar and ammonia tanks and pipes; also (g) pipes, (h) pumps, (i) injectors and other apparatus for the supply of water to boilers, (j) pipes for the conduction of steam to engines, generators, etc. (but not any steam pipes devoted to warming offices and other parts of buildings, such pipes being considered as fixtures and a part of the building); also (k) exhaust pipes leading to flues, smokestacks, chimneys and other wasteways, but not the flues, etc.

TRUNK LINES AND MAINS.

To this account shall be charged the cost of all trunk lines and mains in place. This includes all pipe line from the outlet valve of the holder at works, to the beginning of services, including the cost of all trenching, etc., necessary to the placing of the pipe and the cost of filling trenches and restoring the surface to its former condition or to that required by the municipal authorities at the time the line is installed.

SERVICES (GAS).

To this account shall be charged the cost of the corporation's property in services in or leading to consumers' premises. This

Note—When consumers are required to pay some or all of the cost of services, only that portion of the cost not chargeable to the consumer is chargeable to this account, and in all cases where only a portion of the cost of the service is chargeable to this account the entry in this account shall show the entire cost of the service as well as the amount charged to this account.

includes the cost of material in place, cost of trenching for placing services and of filling trenches and restoring surface to proper condition.

METERS (GAS).

To this account shall be charged the cost of the corporation's property in all meters used or held for use in measuring the gas delivered to consumers. This does not include the cost of the company's meters at the works, which shall be charged to the account "Accessory Equipment at Works," or to a subaccount thereunder.

GAS METER INSTALLATION.

To this account shall be charged the cost of the first setting of meters for determining the amount of gas delivered to consumers *in case it is the policy of the corporation to capitalize the cost of such setting.* Cost of removing such meters and of seting other meters substituted for them shall not be charged to this account, but to the operating expense account "Gas and Meter Installation Work."

MUNICIPAL STREET LIGHTING FIXTURES (GAS).

To this account shall be charged the cost of the corporation's property in the lamps, posts, and ancillary apparatus and appliances used in lighting streets for a municipal corporation. Such cost includes not only (a) cost of material but also (b) cost of first setting and coupling up. It does not include cost of removal or change of position.

GAS MOTORS.

To this account shall be charged the cost of the corporation's property in gas engines and other gas motors (a) in the hands of consumers or (b) held for the purpose of letting to consumers, but (c) not of those held for purposes of sale. Such motors include all appliances for the production of mechanical motion through the consumption of gas. The (d) cost of setting and connecting these motors on the premises of consumers and the cost of resetting or of removal shall not be charged to this account.

GAS STOVES.

To this account shall be charged the cost of the corporation's property in all gas appliances other than those for the lighting and for the production of mechanical motion (a) in the hands of consumers, or (b) held for the purpose of letting to consumers, but (c) not of those held for purposes of sale. This includes (d) stoves, (e) ranges, (f) heaters, (g) hot plates, (h) sad-irons, (i) tailor's irons, and gooses, and (j) other like devices and appliances consuming gas for the direct production

of heat. The (k) cost of setting and connecting these appliances on the premises of consumers and the cost of resetting or of removal shall not be charged to this account.

MISCELLANEOUS STRUCTURES.

To this account shall be charged the cost of all buildings and other structures of a permanent character devoted in whole or in part to gas operations and not includible in any of the foregoing accounts; also of all fixtures thereto permanently attached and made a part thereof, such as (a) water pipes and fixtures, (b) steam pipes and fixtures for warming and ventilating, (c) gas pipes and fixtures for lighting, etc., (d) electric wiring and fixtures for lighting, signaling, etc. Among such buildings may be mentioned general office buildings, general shop buildings, general storehouses, general stable buildings, etc. Where general offices, shops, storehouses, stables, etc., are in buildings includible in a foregoing account, as for example, in the works, no part of the cost of such building shall be charged to this account. This account is provided for structures of a general or miscellaneous character not assignable to any particular department.

GENERAL OFFICE EQUIPMENT.

To this account shall be charged the cost of all equipment of general offices, such as (a) desks, (b) chairs, (c) tables, (d) safes, (e) filing cases and the like, (f) elevators, (g) hoists, (h) conveyors, etc., in general office buildings, and the (i) engines and (j) other motors for operating them, (k) boilers and furnaces in general office buildings for heating them, and furnishing steam or gas for power in such engines, (l) dynamos for producing current for lighting, etc (m). When furnaces and boilers are used primarily for furnishing steam for some particular department and only incidentally for furnishing steam for heating a general office building and operating the equipment therein, the entire cost of such furnaces and boilers shall be charged to the appropriate departmental capital account, and no part to the account "General Office Equipment."

GENERAL SHOP EQUIPMENT.

To this account shall be charged the cost of all equipment of general shops, such as (a) furnaces, (b) boilers, (c) gas producers, (d) engines, (e) dynamos, and (f) other power apparatus used in operating machinery in such shops, (g) machine tools, (h) cranes, (i) hoists, (j) shafting, (k) belts and the like shop equipment, also (l) smithing equipment in general shops which is used principally for other general purposes

than shoeing horses and repairing vehicles. (m) Hand and other small portable tools liable to be lost or stolen shall not be included herein, but (n) portable tools and apparatus of special value may be charged to this account and remain herein so long as record is kept of the persons to whom such tools and apparatus are issued and such persons are made responsible therefor.

GENERAL STORE EQUIPMENT.

To this account shall be charged the cost of all equipment of general store structures, such as (a) movable counters, (b) movable shelving, and (c) other movable equipment of like nature, (d) cranes, (e) hoists and (f) conveyors and (g) engines and (h) other machinery for operating them, (i) carts, (j) barrows, (k) trucks, etc., and other apparatus and appliances used in handling materials and supplies. Counters, shelving and the like which are permanently attached to the structure shall be charged to "Miscellaneous Structures" and not to this account.

GENERAL STABLE EQUIPMENT.

To this account shall be charged the cost of all equipment of general stables, including (a) horses, (b) harness, (c) drays, (d) wagons, (e) automobiles and (f) other vehicles, (g) equipment of shoeing shops, (h) harness repair shops, (i) vehicle repair shops, etc.

GAS TOOLS AND IMPLEMENTS.

To this account shall be charged the cost of all tools and implements coming within the scope of the definition of fixed capital and not covered by any of the foregoing equipment accounts.

GAS TESTING APPARATUS AND LABORATORY EQUIPMENT.

To this account shall be charged the cost of all physical and chemical apparatus used in testing and other technological work, and of all equipment in laboratories used for technological work, such as calorimetry, photometry, chemical analysis and the like; also all equipment for testing building and other materials used in the engineering operations of the company. This does not include the cost of any chemicals or other supplies, which shall be charged to the appropriate subaccount in the account "Materials and Supplies," and as consumed shall be charged thence to the appropriate expense accounts.

OTHER TANGIBLE GAS CAPITAL.

To this account shall be charged the cost of all miscellaneous tangible gas capital not elsewhere provided for.

UNDISTRIBUTED CONSTRUCTION EXPENDITURES.

During the period of construction of a gas plant the general expenditures on account of interest, taxes, accidents, etc., which cannot be assigned to any of the preceding accounts, shall be charged to a sub-account hereunder, and the total charges in sub-accounts A-D at the termination of the period of any construction shall be distributed over the accounts of tangible gas capital pertaining to such construction, in proportion to the charge to such accounts in respect of such construction, and the expense charged to the sub-account "Interest during Construction" shall be distributed in the manner thereunder described.

A. Law Expenses During Construction.

To this account shall be charged expenditures of the following nature, incurred in connection with the construction of a gas plant, namely, the pay and expenses of all counsel, solicitors and attorneys, their clerks and attendants and expenses of their offices; printing briefs, legal forms, testimony, reports, etc.; payments to arbitrators for the settlement of disputed questions; costs of suit and payments of special fees, notarial fees, and witness fees; and expenses connected with taking depositions; also all legal and court expenses. When any of the expenses above enumerated can be charged directly to the account for which incurred they should be so charged, and not to this account. Expenses in connection with the acquisition of the right of way or other land shall be charged to the account "Land Devoted to Gas Operations." Law expenses in connection with the organization of the corporation shall be charged to the account entitled "Organization," etc.

B. Injuries and Damages During Construction.

This account includes all expenses incident to injuries to persons or property caused directly in connection with construction of the gas plant; proportion of salaries and expenses of physicians and surgeons; nursing and hospital attendance, medical and surgical supplies, artificial limbs, railway and carriage fares for conveying injured persons and attendants; also proportion of pay and expenses of claim adjusters and their clerks, and pay and expenses of employees and others called in consultation in relation to the adjustment of claims coming under this head.

C. Taxes During Construction.

To this account shall be charged all taxes and assessments lev-

---

Note.—Witness fees and other expenses in connection with the conduct of suits should be charged to "Law Expenses during Construction," but the amount of final judgments, including plaintiffs' court costs, should be charged to this account.

ied and paid on property belonging to the company, while under construction and before the plant is opened for commercial operation, except special taxes assessed for street and other improvements, such as grading, sewering, curbing, guttering, paving, sidewalks, etc., which should be charged to the account to which the property affected was charged.

D. Miscellaneous Construction Expenses.

To this account shall be charged the salaries and expenses of executive and general officers of a plant under construction; clerks in general offices engaged on construction accounts or work; rent and repair of general offices, together with the furniture and office expenses; also all construction and equipment items of a general and incidental nature which cannot properly be charged to any other account in this classification.

E. Interest During Construction.

To this account shall be charged the interest accrued at not to exceed the legal rate upon all moneys and credits available upon demand acquired for use in connection with the construction and equipment of the property from the time of such acquisition to the termination of the period of construction, at which time this account shall be cleared through charges to the various other preceding accounts of expenditures for construction in proportion to the charges made to such accounts in connection with the project during the construction of which such interest accrued and the times elapsing from the dates of such charges (considered as made at the close of the calendar month) to the date of termination of the period of construction. Interest receivable accrued upon such moneys and credits shall be credited to this account.

ELECTRIC CAPITAL.

For the accounts to which shall be charged the cost of capital devoted to electric operations, see the Uniform System of Accounts for Electric Corporations, prescribed by the Public Service Commission.

RAILROAD CAPITAL.

For the accounts to which shall be charged the cost of capital devoted to steam railroad operations, see the Uniform System of Accounts for Expenditures for Road and Equipment, etc., as established for Steam Railroads by the Public Service Commission.

STREET RAILROAD CAPITAL.

For the accounts to which shall be charged the cost of capital devoted to street railroad operations, see the Uniform System of

---

Note.—This account shall not include any costs of organization or any costs or discounts connected with the issue and disposal of stocks, funded debt or other securities and commercial paper.

Accounts for Street Railroad Corporations, prescribed by the Public Service Commission.

LAND IN OTHER DEPARTMENTS.

To this account shall be charged the cost of the corporation's interest in land (exclusive of improvements thereon) devoted to operations other than electric operations, gas operations, railroad operations, and street railroad operations. Such cost includes, *when assumed or paid by the purchaser in its own behalf,* (a) cost of registration of title, (b) cost of examination of title, (c) conveyancer's and notary's fees, (d) purchasing agent's commissions or fees or proportion of purchasing agent's salary, (e) taxes accrued to date of transfer, and (f) all liens upon the title acquired. If, at the time of acquisition of such interest in lands, it extends to buildings or other improvements thereon, which improvements are devoted by the corporation to operations other than the four classes above mentioned, and the contract of acquisition does not determine the price of such improvements, they shall be appraised at their fair cash value, and such appraised value shall be charged to the appropriate structure accounts and excluded from the account Land in Other Departments. If such improvements are held as investments, the cost (or appraised value at time of acquisition of title, if the cost to the corporation is not determined in the contract of acquisition) shall be charged to the appropriate investment account. If the improvements are removed or wrecked, the salvage (less the cost of removal or wreckage) shall be excluded from the account Land in Other Departments.

FRANCHISES IN OTHER DEPARTMENTS.

To this account shall be charged "the amount (exclusive of any tax or annual charge) actually paid to the State or to a political subdivision thereof as the consideration for the grant of such franchise or right" as is necessary to the conduct of the corporation's operations, other than electric, gas, railroad and street railroad.

PATENT RIGHTS IN OTHER DEPARTMENTS.

To this account shall be charged the cost of all rights (having a life of more than one year from the date when placed in service) acquired by the corporation in or under valid patent granted by the United States to inventors for inventions and discoveries which are necessary to the economical conduct of the corporation's operations other than electric, gas, railroad and street railroad.

OTHER INTANGIBLE CAPITAL IN OTHER DEPARTMENTS.

To this account shall be charged the cost of all property of the

corporation coming within the definition of intangible capital devoted to its operations other than electric, gas, railroad and street railroad, and not includible under any of the foregoing accounts.

TANGIBLE CAPITAL IN OTHER DEPARTMENTS.

To this account shall be charged the cost of all property of the corporation coming within the definition of tangible capital devoted to its operations other than electric, gas, railroad and street railroad.

FLOATING CAPITAL.

Floating capital is divided into two great groups, of which the first may appropriately be called "Materials and Supplies" and the second "Current Assets."

MATERIALS AND SUPPLIES.

To this account shall be charged the cost delivered in store of all materials and supplies acquired by the corporation, whether the same are intended to be consumed in construction or in operation, or later to be sold. The cost at which such goods shall be charged shall be the invoice cost. Any discounts recovered through prompt payment of billsfor materials and supplies shall be credited to the account "Discounts on Materials and Supplies—Cr."

The scrap value of things retired from service shall be charged to an appropriate sub-account in this account, while such things remain the property of the corporation. If such scrap value is not known and cannot readily be determined it shall be estimated, and errors in such estimates when determined shall be adjusted through the accounts involved if during the year in which the estimates were made; if later, then through the "Corporate Surplus or Deficit" account.

Inventories of materials and supplies shall be taken at least annually, and any shortages or overages disclosed by such inventories shall be credited or debited to this account and debited or credited to the operating expense account "Undistributed Inventory Adjustments—Balance," in case they cannot be assigned to specific accounts.

CASH ASSETS.

To this account shall be charged all money coming into the possession of the corporation and in which the corporation has the beneficial interest. This includes coin of the United States, United States Treasury notes, gold and silver certificates and greenbacks, and bankbills payable to bearer, and by the custom of the country passing without indorsement and freely accepted as money. To it shall also be charged all bank credits, subject to

satisfaction or transfer upon demand, also all checks (whether payable to bearer or to order) andother negotiable paper payable on demand, whether issued by individuals or by corporations.

INTEREST AND DIVIDENDS RECEIVABLE.

Whenever the income account is stated the appropriate subaccount therein shall be credited, and this account shall be charged with all accrued but not yet collected interest upon all commercial paper and accounts of solvent concerns held by or for the benefit of the corporation; also all dividends, declared by solvent concerns but not yet collected, the right to which is in the corporation.

BILLS RECEIVABLE.

To this account shall be charged the cost of all negotiable paper which is the property of the corporation and upon which solvent concerns are liable. This account includes notes, drafts, etc., but such paper due on demand shall be charged not to this account but to the account "Cash Assets." This account does not include investments (for which see later); nor does it include interest coupons.

ACCOUNTS RECEIVABLE.

To this account shall be charged all amounts owing to the corporation upon accounts with solvent concerns; also the cost of all accounts and claims upon which responsibility is acknowledged by solvent concerns, and payment of which the corporation is entitled to demand; also of all judgments against solvent concerns where the judgment is not appealable or suspended through appeal. This account does not include negotiables.

OTHER CURRENT ASSETS.

To this account shall be charged the cost of all current assets of the corporation which are not includible under any of the last foregoing accounts. By current assets are meant only those things which are readily convertible into money and which are held with the intent of being presently converted into money and not as investments.

TREASURY HOLDINGS.

When securities, whether funded or unfunded debt or stocks, have been issued or assumed by the corporation and are held by the treasurer or other agent of the corporation for the benefit of the corporation they shall be charged at face values to an account designated "Treasury Holdings." This does not apply to the case of payment of debt and cancellation of the evidence thereof, or to the retirement of stocks, but to the case where the securities received or acquired are kept alive.

INVESTMENTS.

By investments, as here used, are meant all properties acquired not for use in present operations, but for income to be derived from them or for a rise in value or for devotion to future operations at a time when it seems probable that they cannot be so advantageously acquired as at the time of actual acquisition. The cost of the corporation's title to any property held as an investment shall be charged to an account entitled "Investments."

SPECIAL DEPOSITS.

By special deposits, as here used, are meant amounts of money and bank credits in the hands of fiscal agents of the corporation and others for the payment of coupons, dividends or other special purposes. Credits at banks subject to check of the corporation or its agents for general purposes, deposits at banks, whether withdrawable at pleasure or after a specified time, amounts of money in safety deposit vaults, etc., so long as they are available for general purposes of the corporation shall be excluded herefrom.

COUPON SPECIAL DEPOSITS.

To this account shall be charged all moneys and bank credits specially deposited in the hands of fiscal agents or other agents of the corporation for the payment of interest coupons when presented. Such coupons when paid from such deposits shall be credited to this account and charged to the appropriate interest account. Payments to trustees (or other agents) of the holders of bonds or other securities of the interest accrued thereon which operate under the terms of the securities (or of mortgages supporting such securities) as a release of the paying corporation from further liability for such interest shall not be charged to this account, but to the appropriate "Interest Accrued" account.

DIVIDEND SPECIAL DEPOSITS.

To this account shall be charged all moneys and bank credits

Note.—In the annual reports to be made to this Commission by the corporations and other persons engaged in gas operations, investments, whether bound or free, will be required to be classified with at least the following detail:

Bound investments will be required to be divided into the three classes, "Mortgaged or Pledged Investments," "Contractual Fund Investments," and "Other Bound Investments." Each of these three classes and the class "Free Investments," will be required to be subdivided into the following:

Funded Debt of Controlling Corporations.
Funded Debt of Affiliated Corporations.
Funded Debt of Controlled Corporations.
Stock of Controlling Corporations.
Stock of Affiliated Corporations.
Stock of Controlled Corporations.
Advances to Controlled Corporations.
Funded Debt of Other Corporations.
Stock of Other Corporations.
Land.
Improvements on Land.
Other Investments.

specially deposited in the hands of fiscal agents or other agents of the corporation for the payment of dividends upon the corporation's stocks. Such dividends when paid from such deposits shall be credited to this account and charged to the appropriate dividend account.

OTHER SPECIAL DEPOSITS.

To this account shall be charged all moneys and bank credits deposited in the hands of fiscal agents or other agents of the corporation for other special purposes than the payment of interest coupons and dividends. When such purposes are satisfied this account shall be credited with the amount specially deposited to provide such satisfaction.

PREPAYMENTS.

When payments for taxes, insurance, rents and the like are made in advance of the actual accrual thereof, the amount of the advance payment shall be charged to the appropriate account in this group. As such taxes, etc., accrue the appropriate prepayment account shall be credited and the appropriate expense or income account shall be charged.

PREPAID TAXES.

When taxes are paid in advance of their accrual, the amount prepaid shall be charged to this account. As the taxes thus prepaid accrue they shall be credited at monthly intervals to this account and charged to the appropriate taxes account. This account should not include any so-called taxes, like water taxes, drainage taxes, fire taxes, etc., which are payments for special benefits received. Such payments for special benefits, where finally chargeable to operating expenses should, when prepaid, be charged to the account "Other Prepayments."

PREPAID INSURANCE.

When premiums on insurance policies are paid in advance of their accrual, the amount prepaid (whether paid in cash or by the issue of notes or other negotiable paper) shall be charged to this account. As such premiums accrue they shall be credited at monthly intervals to this account and charged to the appropriate expense account.

Note.—By the accrual of taxes, insurance, rent, etc., is meant their accumulation when considered as spread uniformly over the period to which they apply. Thus if the rent fixed by contract of lease for a certain property is $600 for a calendar year, this accrues at the rate of $50 each month (unless it is desired to base the accrual on days, when of course the varying lengths of the months would require to be considered), regardless of the actual times when the rent matures; $50 should thus be credited each month to the account, "Prepaid Rents" (if the rent has been prepaid), and concurrently charged to the appropriate account in the "Income" account. Similarly in the case of other prepayments.

PREPAID RENTS.

When rents are paid in advance of the enjoyment of the term, the amount prepaid (whether paid in cash or by the issue of notes or other negotiable paper) shall be charged to this account. As the term is consumed, this account shall be credited at monthly intervals and the appropriate rent account in the income account shall be charged.

OTHER PAYMENTS.

When prepayments are made for any other thing than taxes, insurance and rents, above provided for, such prepayments shall be charged to this account and as the purpose of the prepayment is satisfied, proportionate credits shall be made monthly to this account and charged to the appropriate expense or income account.

SUSPENSE ACCOUNTS.

When any expenditure is made, the appropriate disposition of which is not yet determinable, or when any loss occurs which under the rules of the Public Service Commission may be spread over a period of time, or when any debit made for any other reason may be amortized, through charges made to expense or income accounts at intervals over a period of time, such expenditure, loss or other debit, shall, except as herein otherwise directed, be charged to an appropriate account in this group of accounts.

UNAMORTIZED DEBT DISCOUNT AND EXPENSE.

When funded debt securities and other evidences of indebtedness are disposed of for a consideration whose cash value is less than the par value of the securities or other evidence of indebtedness and the interest thereon accrued at the time the transfer takes place, the excess of such par value and accrued interest over the cash value of the consideration received shall be charged to this account. To this account shall also be charged all expense connected with the issue and sale of evidences of debt, such as fees for drafting mortgages and trust deeds, fees and taxes for recording mortgages and trust deeds,

---

Note.—By "amortization" of any charge or credit is meant its gradual extinction. The word is broader than the word "depreciation" since the latter is restricted ordinarily to tangible property. The word "depreciation" also imports more of the idea of fluctuating value and is complicated somewhat with the question of cost of replacement at market prices. Because it is considered unnecessary in connection with the gradual consumption or expiration of life of capital to consider the question of cost of replacement until the replacement is actually made, at which time the cost of replacement is duly charged to the appropriate account, and because provision is necessary for the gradual extinction of certain charges (such as those for some kinds of capital, those for extraordinary casualties, for discount on debt, etc.), to which the term "depreciation" does not well apply, it is considered advisable to use the term "amortization" in connection with the extinction of such charges, and of certain corresponding credits, such as premiums on debt outstanding.

cost of engraving and printing bonds, certificates of indebtedness and other commercial paper having a life of more than one year, fees paid trustees provided for in mortgages and trust deeds, fees and commissions paid underwriters and brokers for marketing such evidences of debt and other like expense. At or before the close of each fiscal period thereafter, a proportion of such discount and expense based upon the life of the security to maturity shall be credited to this account and charged to the account "Amortization of Debt Discount and Expense" in "Income" account. Such discount and expense may, if desired, be amortized more rapidly through charges of all or any part of it, either at the time of issue or later, to the account "Other Deductions from Surplus."

UNAMORTIZED DISCOUNT ON STOCKS OUTSTANDING.

If any stock was disposed of prior to July 1, 1907, for a consideration whose cash value was less than the par value of such stock, the excess of the par value of the stock over the cash value of such consideration shall be charged to an account entitled "Unamortized Discount on Stocks Outstanding." The conditions under which and the rate at which discount on stocks issued shall be amortized, if at all, are solely within the discretion of the corporation, or that of its board of directors, trustees or managers. Such amortization shall be effected, if at all, through the proper "Appropriation" account.

OTHER SUSPENSE.

To this account shall be made all debits not elsewhere provided for and the proper final disposition of which is uncertain. This will include all such matters as expense of preliminary surveys, plans, investigations, etc., made for determining the feasibility of projects under contemplation. Should any such project later be carried to completion, such amounts shall be credited to this account; should it be abandoned, such amounts shall be charged to "Corporate Surplus or Deficit."

When the proper disposition of any matter charged to this account is determined, it shall be credited to this account and charged to the appropriate account.

DEBT.

The word debt as here used covers all absolute obligations to pay money at a definite time or times or at a time or times which are capable of being made definite by demand or other act of the creditor. It does not cover contingent obligations, such as obligations to pay rent for future employment of the term, liabilities of endorsers upon paper not yet defaulted, etc.

Debt is divided into Funded Debt and Unfunded Debt.

Funded Debt comprises all debt which by the terms of its creation does not mature until more than one year after date of creation.

Unfunded Debt comprises all debt which by the terms of its creation matures one year or less after the date of creation or after demand.

FUNDED DEBT.

Funded debt shall be divided in the accounts into classes, such classes being determined by the four characteristics, (1) mortgage or other lien or security therefor, (2) rate of interest, (3) interest dates, and (4) date of maturity. A separate sub-account shall be raised for each such class of funded debt, and no two amounts of debts not agreeing in respect of all four of the characteristics above named shall be included in the same sub-account. The title of each sub-account of funded debt shall express the four characteristics above stated, that is to say, mortgage or other lien or security, rate of interest, dates of maturity of interest, and date of maturity of principal, as, e. g., "First Mortgage 5% QF. 10, Aug. 10, 1928," which means funded debt secured by the company's first mortgage, bearing interest at the rate of 5 per cent per annum, interest maturing quarterly on February 10th, May 10th, August 10th and November 10th of each year, pricinpal maturing August 10, 1928. Where any portion of the funded debt rests only on the general credit of the corporation and is not specially secured or supported by lien of any character, it shall for the purposes of these accounts be known as a "debenture." "Debentures" thus include promissory notes unsecured by mortgage or other lien, also those securities commonly known as "plain bonds."

To the appropriate sub-account in "Funded Debt" shall be credited when issued the par value of the amount of evidences of funded indebtedness issued. The entry shall show not only the amount issued but the purpose for which issued, and shall make intelligible reference to the book, page, and account whereon are shown any discounts or premiums realized on the amount issued. If the consideration received for the issue is anything else than money, the entry shall show further the principal to whom issued, and shall describe with sufficient particularity to identify it the actual consideration received for the issue. If the issue in any case is to an agent of an undisclosed principal the name and business address of such agent and the fact of his agency shall be shown in the entry.

UNFUNDED DEBT.

The accounts for unfunded debt are defined as follows:

TAXES ACCRUED.

To this account shall be credited at the close of each month the

taxes accrued during the month, and corresponding charges shall be made to the appropriate "Taxes" account. Credits to the account "Taxes Accrued" will necessarily be based upon estimates until the amount of tax levied for the tax period is known; such estimates shall be based upon the best data available, and as soon as the amount of tax for the period is known the account involved shall be adjusted to conform. When any tax is paid it shall be charged to this account and credited to the account "Cash Assets" or other suitable account.

RECEIVER'S CERTIFICATES.

When any receiver acting under the orders of a competent court is in possession of the property of the corporation and under the orders of such court issues certificates of indebtedness chargeable upon such property, the par value of such certificates shall be credited to this account. Interest accruing upon such certificates shall also be credited monthly to this account.

JUDGMENTS UNPAID.

When any judgment of indebtedness is rendered by a court of competent jurisdiction against the corporation, or any fine or penalty requiring the payment of money is assessed by such a court against the corporation, the amount thereof shall be credited to this account, and the entry shall designate the action or suit as a consequence of which such judgment is pronounced or such fine or penalty assessed. The designation of the action or suit shall show the court, the term thereof, the parties, and the character of the action or suit.

Interest accruing upon any such judgment shall be credited monthly to this account.

INTEREST ACCRUED.

To this account shall be credited at the close of each month the interest accrued during the month upon indebtedness of the corporation. When such interest is paid it shall be charged to this account and credited to "Cash Assets" or other suitable account.

The account "Interest Accrued" does not include interest on judgments nor that upon receiver's certificates. The interest accruing on any judgment against the corporation or upon any receiver's certificates shall be credited to the account to which such judgment or receiver's certificates stand credited.

DIVIDENDS DECLARED.

When any dividend is declared, it shall be credited to this account and here remain until it is paid, when it shall be charged to this account and credited to "Cash Assets" or other suitable account.

BILLS PAYABLE.

When any negotiable which matures not later than one year after date of issue (or of demand) or assumption by the corporation of primary liability thereon is issued or assumed, the par value thereof shall be credited to this account, and when it is paid it shall be charged to this account and credited to "Cash Assets" or other suitable account.

The account "Bills payable" does not include checks, demand notes or other negotiables maturing upon demand. Such negotiables should upon issue be credited immediately to the account "Cash Assets."

CONSUMERS' DEPOSITS.

To this account shall be credited as made moneys deposited with the company by consumers as security for the payment of gas bills. Deposits refunded shall be charged to this account and credited to "Cash Assets." Deposits applicable to uncollectible or worthless gas bills shall, at the close of the fiscal year, be credited to the account "Uncollectible Bills" and debited to this account.

ACCOUNTS PAYABLE.

To this account shall be credited when incurred all liabilities of the corporation upon open accounts. Overdrafts at bank if made under engagement for credit for a specified time shall be credited to this account; if subject to call, they shall be credited to the account "Cash Assets."

OTHER UNFUNDED DEBT.

To this account shall be credited at its face value all unfunded debt upon which the company is liable, and which is not elsewhere provided for.

RESERVES.

Reserves shall be classified as Permanent and Temporary.

By Permanent Reserves are meant those that must be maintained intact during the life of the corporation. Permanent reserves shall be classified into the two classes, Premiums on Stocks Outstanding and Other Permanent Reserves.

PREMIUMS ON STOCKS OUTSTANDING—

shall be sub-classified with respect to the several classes of stocks, for definitions of which see the accounts under the head Stocks. A sub-account shall be kept for each particular class of stocks, and such sub-accounts shall be severally entitled:

Premiums on Debenture Stocks Outstanding.

Premiums on First Preferred Stocks Outstanding.

Premiums on Second Preferred Stocks Outstanding, etc.

Premiums on Common Stocks Outstanding.

When a premium is realized upon an issue of any particular class of stock, such premium shall be credited to the sub-account above provided for such class of stock, and such credit shall remain in such account so long as such stock remains outstanding. By a premium realized (as the words are above used) is meant the excess of the actual money value (at the time of issue of the stock) of the consideration received for such issue over the par value of the amount of stock issued. If the stock is issued by the corporation to its treasurer or other agent, the excess of the actual money value of the consideration obtained by such agent in exchange for such stock over the par value thereof shall be considered the premium realized.

OTHER PERMANENT RESERVES.

To this account shall be crdited all reserves not above provided for created to remain intact until the dissolution of the corporation. A separate sub-account shall be created for each particular purpose for which a reserve is raised, and the purpose of the reserve shall be designated in the title of the account thereof and shall be expressed in full in the first entry in such account.

By Temporary Reserves are meant those that are not intended to remain intact during the life of the corporation. Temporary Reserves shall be classified as Contractual Reserves and Non-contractual Reserves.

Contractual Reserves are such reserves as the corporation has bound itself by contract to create and maintain for purposes expressed in such contracts, as e. g., reserves to cover sinking funds provided for in mortgages, etc. A separate sub-account shall be raised for each particular contractual reserve, and to such account shall be credited all appropriations, and accumulations made in accordance with the contract provisions under which such reserve is created. The purpose of the reserve shall be designated in the title of the account thereof, and shall be expressed in full in the first entry in such account.

Noncontractual Reserves are such temporary reserves as are raised without being required under any contract. Noncontractual Reserves are divided into Required and Optional.

Required Reserves are provided for in the following accounts:

UNVOUCHERED ITEMS.

When at the close of any month title has been acquired to any materials and supplies which have not yet been vouchered, they shall be charged at cost to the appropriate accounts in materials and supplies and credited to the account "Unvouchered Items" or a sub-account thereunder; and when the voucher therefor is

audited it shall be charged to the account originally credited and credited to the account "Bills Payable" or a suitable sub-account thereunder.

When at the close of any month's accounts statements of expense assignable to such month have not been received, or if received, have not yet been vouchered, the amount of such expense (estimated as nearly as may be if not precisely known) shall be charged to the appropriate expense accounts and credited to the account "Unvouchered Items." When such expense is vouchered the amount credited to this account in respect thereof shall be charged hereto.

ACCRUED AMORTIZATION OF CAPITAL.

To this account shall be credited such amounts as are charged from time to time to "Operating Expenses" or other accounts to cover the amortization of capital. When any capital is retired from service, the original money cost thereof (estimated if not known, and where estimated, that fact and the facts upon which the basis is estimated shall be stated in the entry), less salvage, shall be charged to this account. The amount originally entered or contained in the charges to any capital account in respect of such capital so going out of service shall be credited to such capital account and any necessary adjusting entry made to the appropriate subaccount under the account "Corporate Surplus or Deficit."

UNAMORTIZED PREMIUM ON DEBT.

When funded debt securities or other evidences of indebtedness are disposed of for a consideration whose cash value is greater than the par value of such securities or other evidence of indebtedness and the interest thereon accrued at the time the transfer takes place, the excess of the cash value of such consideration received over the par value of the securities or other evidences of indebtedness and the accrued interest shall be credited to this account. At monthly intervals thereafter a proportion of such premium based upon the life of the security or other evidence of indebtedness to maturity shall be charged to this account and credited to "Amortization of Premium on Debt," in "Income" account.

CASUALTIES RESERVE.

When any liability arises because of loss or damage to the property of others or of injuries to employees or other persons, the amount of the liability shall be charged to the appropriate operating expense or other accounts and credited to this account against which the actual cost of satisfaction of the liability shall be charged when the matter is determined. If the extent of the liability cannot be ascertained promptly after the liability arises, it shall be estimated as accurately as practicable for the purpose of

determining the immediate charge to the expense or other appropriate account and the matter shall be adjusted when the extent of the liability is definitely ascertained. Credits to "Casualties Reserve" shall be so adjusted that the account shall never have a debit balance at the close of any fiscal year.

REPAIRS RESERVE.

When any reparable damage to the property of the corporation occurs the estimated cost of repair shall be charged to the appropriate expense account and credited to this account against which the actual cost of the repair shall be charged when executed. If the loss is of such a character that it is in whole or in part indemnifiable under any contract of insurance carried by the corporation, the indemnifiable portion of the loss shall be charged to the insurer and credited to the "Repairs Reserve;" if the corporation makes charges in its operating expense accounts for self-insurance with regard to loss of the character in question the uncovered portion of the loss shall be charged to "Self-insurance Reserve" and credited to "Repairs Reserve." Credits to "Repairs Reserve" shall be so adjusted that the account shall never have a debit balance at the close of any fiscal year, nor shall it ever be allowed to accumulate through charges to operating expense a credit balance greater than — per cent. of the total cost of all structures and equipment in service or more than twice the greatest loss from reparable damage to structures and equipment occurred in any preceding year. The charges to "Repairs Reserve" shall be subclassified in accordance with the prescribed classification of repairs accounts in operating expenses.

SELF-INSURANCE RESERVE.

To this account shall be credited the amounts charged to the operating expense account "Insurance" to cover self-carried risks. Charges to "Self-Insurance Reserve" shall be made in accordance with the directions concerning the account "Repairs Reserve." Credits to "Self-Insurance Reserve" shall be so adjusted that the account shall never have a debit balance at the close of any fiscal year, nor shall it ever be allowed to accumulate through charges to operating expense a credit balance greater than — per cent. of the total cost of all structures and equipment in service.

Note.—It is not intended by the above that the repair of ordinary wear and tear shall be carried through the "Repairs Reserve." The cost of repairing ordinary wear and tear may, until otherwise ordered, be charged direct to the appropriate repairs account in operating expenses when the repairs are executed. Corporations and persons intending to follow with regard to repairs the practice of charging to the repair accounts in operating expenses the estimated reparable wear and tear as it accrues shall, prior to beginning such practice, file a notice of such intent with the Public Service Commission.

OTHER REQUIRED RESERVES.

To this account shall be credited all required reserves not elsewhere provided for. The first entry of a credit to this account with respect to any particular reserve shall show the purpose of the reserve and every subsequent entry with respect to that reserve shall designate the reserve to which it relates. This account is a subaccount under the account "Other Required Reserves."

OPTIONAL RESERVES.

Optional reserves are those the creation of which is solely within the discretion of the corporation. A subaccount shall be raised for each particular reserve and its title shall designate the purpose of such reserve and the first entry therein shall express in full such purpose.

STOCKS.

By stocks of a corporation, as the term is here used, are meant those securities which represent permanent interests in the corporation or interest which, if terminable, are so only at the option of the corporation.

Stocks are classified as

Debenture Stocks.
First Preferred Stocks.
Second Preferred Stocks, etc.
Common Stocks.

Debenture stocks are those issued under a contract to pay absolutely thereon at specified intervals a specified return.

First preferred stocks are those which have the first claim upon such dividends as may be distributed. They may be cumulative or noncumulative, participating or nonparticipating. If cumulative, the amount by which the dividend at any dividend period fails to reach the stipulated rate is carried forward to continue as a claim upon dividends until satisfied; if non-cumulative, such amount lapses. If a first preferred stock is participating, it is not limited to the stipulated rate in the amount of dividends which it may receive but is entitled to participate in accordance with the terms of the contract under which it is issued, in further dividends; if nonparticipating, it is limited to the stipulated rate.

Second preferred stocks are those whose claims in the distribution of dividends are next after those of first preferred stocks. These stocks may also be cumulative or noncumulative, participating or nonparticipating.

Common stocks are those whose claims in the distribution of dividends are subordinate to the claims of all other stocks.

Stocks differ also in regard to the voting powers incident to ownership of them.

Stocks are sometimes issued under contracts wherein the issuing corporation reserves to itself the right to retire them at its option, either absolute or subject to conditions expressed in the contracts whereunder the stocks are issued.

In the accounts of stocks outstanding, a separate account shall be raised for each class of stock issued, and no two stocks shall be considered of the same class unless they are equal in their interest or dividend rights, their voting rights and the conditions under which they may be retired. The characteristics of any class of stocks in these three regards shall be designated in the title of the account raised to cover such stocks, and shall be clearly expressed in the first entry of such account. To the account for any class of stocks shall be credited when issued the par value of the amount of stock of that class issued. If such issue is for money that fact shall be stated, and if for any other consideration than money the person to whom issued shall be designated and the consideration for which issued shall be described with sufficient particularity to identify it; if such issue is to the treasurer, or other agent of the corporation, to be by him disposed of for the benefit of the corporation, that fact and the name of such agent shall be shown; and such agent shall in his account of the disposition thereof show the like details concerning the consideration realized thereon, which account when accepted by the corporation shall be preserved as a corporate record. If the fair cash value of the consideration realized upon the issue of any amount of stock prior to July 1, 1907, was less than the par value thereof, the deficit shall be charged to the account "Discount on Stocks Outstanding." Similarly if such value is greater than the par value of such stock, the excess shall be credited to the account "Premiums on Stocks Outstanding," and corresponding reference thereto shall be contained in the entry relating to such stock in the stock account.

SCHEDULE B.—INCOME ACCOUNT.

A comparison of the balances in the foregoing accounts at any particular moment will, if the accounts have been properly kept, show the then existing condition of a corporation's affairs so far as such condition can be shown through the accounts. The group of accounts just defined is sometimes called the balance sheet accounts. Their balances indicate the condition of the corporation at any particular time. These accounts with their subsidiary accounts are all that are necessary prior to the time when the corporation becomes what may be called a "going concern."

When a corporation begins operations, it requires an additional group of accounts in which to classify in convenient form the accounting history of the various changes it undergoes. Such group of accounts

brings together or accumulates the account of the various incidents of the corporation's history. This group of accounts may be called the "Income" account. They are made up usually on a yearly basis and are closed into one grand account called "Corporate Surplus or Deficit," which ties together this group of accounts and the preceding group.

The principal divisions of this group of accounts are the "Revenue" accounts, the "Revenue Deduction" accounts, the "Income Deduction" accounts, and the "Appropriation" accounts.

By Revenues, as the word is used herein, are meant all amounts of money which the corporation receives or becomes lawfully entitled to recover in respect of services rendered and products sold and gross profits on merchandise sold or as a return upon its property (or interests in property). Revenues are classified as Operating Revenues and Non-operating Revenues.

Operating Revenues are those derived from the sale of products and merchandise from services rendered, and from return on property used by the person or corporation in its own operations.

Non-operating Revenues are those derived as a return upon the property of the corporation in the hands of others or from its interests in property in the hands of others. They may be sub-classified as Rents, Interest, Dividends, and Miscellaneous.

Revenue Deductions consist of Expenses, Taxes and Uncollectible Bills.

Expenses are those outgoes (including capital consumed) necessary to the production of the commodities sold and the services rendered, and to the collection of the revenues. They are divided into Operating Expenses and Non-operating Expenses. Operating Expenses are those incident to the operating revenues; Non-operating Expenses are those incident to the non-operating revenues.

Taxes are those annual or other payments exacted by governments for the purpose of raising funds for public uses. Strictly speaking, they are not within the definition of expenses above given, but because of the fact that they must be provided for out of revenues before the corporation can be said to have any income, it is frequently the practice to include them under the head of expenses.

Revenues, diminished by uncollectible bills, expenses and taxes, give an amount which may be called the Gross Corporate Income. This income is subject to several compulsory deductions, mostly contractual, like rent, interest, etc., and the remainder after these are made, may fitly be called the Net Corporate Income, which being subject only to the discretion of the Corporation is most conveniently carried directly to the corporate surplus. The accounts covering the compulsory deductions from gross corporate income, as above defined, are called the Income Deduction Accounts.

The group of accounts covering the yearly changes in the corporate surplus may properly be called the Appropriation Accounts, since practically all of the matters covered by them are within the discretion of the corporation, although they also include certain adjustments made because of facts of previous years imperfectly accounted for at the time (whether through error or through lack of information) and certain minor matters like extraordinary expenses not chargeable as deductions from revenues, also such matters as profits on the sale of capital, and profits and losses on the sale of investments.

OPERATING REVENUE ACCOUNTS.

Credits to the various revenue accounts shall be made upon the basis of bills rendered or of gross prices. Discounts for prompt payment, corrections of overcharges, overcollections theretofore credited and afterwards corrected, authorized abatements and allowances, and other corrections and deductions shall be charged to the revenue accounts to which they relate.

MUNICIPAL STREET LIGHTING—GAS.

To this account shall be credited all revenues derived from lighting streets for municipal corporations by means of gas or from supplying gas therefor.

Note—In the foregoing account, the word *streets* is to be interpreted to include parks, plazas and all other public places not classified as buildings.

LIGHTING MUNICIPAL BUILDINGS—GAS.

To this account shall be credited all revenues derived from lighting municipal buildings by means of gas or from supplying gas therefor. Where gas flowing through any meter is used in any municipal building for both light and heat or power, or for light, heat, and power, the revenues derived therefrom shall be credited to this account.

MUNICIPAL HEAT AND POWER—GAS.

To this account shall be credited all revenues derived from gas supplied at special heat or power rates for the production of heat or power in municipal buildings.

MISCELLANEOUS GAS REVENUES—MUNICIPAL.

To this account shall be credited all revenues derived from the supply of gas to municipal corporations and not provided for in the foregoing accounts; also from the rental of gas equipment to such corporations.

GAS SUPPLIED TO OTHER COMPANIES.

To this account shall be credited all revenues derived from supplying gas to other companies engaged in the production or the distribution of gas or in both.

METERED GAS FOR COMMERCIAL LIGHTING.

To this account shall be credited all revenues derived from the sale of gas for lighting purposes to consumers other than municipal corporations, where such gas is measured through ordinary meters. Where the gas flowing through any ordinary meter is used for both lighting and heating or power purposes, the revenues derived therefrom shall be credited to this account. This account does not include gas sold to other gas companies for distribution.

PREPAID GAS.

To this account shall be credited all revenues derived from the sale of prepaid gas delivered through so-called "prepayment meters."

GAS FOR COMMERCIAL HEAT AND POWER.

To this account shall be credited all revenues accruing to the gas sold at special heat or power rates to others than municipal corporations for the production of heat or power or both. This account does not include gas sold to other gas companies for distribution.

COMMISSIONS ON OTHERS' GAS.

To this account shall be credited all revenues accruing to the corporation for distributing gas of other companies through its pipes, selling the same, and for all other services performed in connection therewith. In case the corporation distributes through its pipes the gas of another company, the corporation shall charge "Cash Assets" or the appropriate sub-account (or accounts) under "Accounts Receivable" with the value of the gas of such other company supplied by the corporation to consumers, and shall enter a corresponding credit to a clearing account "Gas Supplied By..... Company and Distributed by this Corporation [or, 'by .....,' naming the corporation keeping the account]," which account shall monthly be cleared by charging to such clearing account the amount neeessary to balance, and crediting to the account "Commissions on Others' Gas" the corporation's proportion of the total revenue, and to the account of the company, supply such gas to the corporation that company's proportion of such total revenue.

RENT OF GAS METERS.

To this account shall be credited all revenues derived from the letting of gas meters to others than municipal corporations.

RENT OF GAS STOVES, ENGINES, ETC.

To this account shall be credited all revenues derived from the letting of gas stoves and other heating appliances consuming

gas, gas engines and appliances for producing mechanical motion through the consumption of gas, and all other gas appliances not elsewhere provided for. Where the contract of letting names only a single consideration for both the letting and the maintenance of the appliances so let, the entire revenue shall be included in this account.

GAS JOBBING REVENUE.

To this account shall be credited all revenues derived from work performed on the consumers' premises beyond the outlet of the meter. This includes revenue derived from connecting and disconnecting stoves, engines and other appliances, relocation of piping, and other plumbing work, and all other work commonly covered by the term "jobbing."

PROFIT ON SALE OF GAS APPLIANCES.

To this account shall be credited the profit derived from the sale of gas appliances such as gas lamps, gas stoves, gas engines and all other appliances operating through the consumption of gas, such profit being defined to be the excess of the sales price over the cash cost (including transportation) of the goods in store. This account does not include the sale of superseded equipment, or of junk or other scrap or salvage.

SALE OF RESIDUAL AND BY-PRODUCTS.

To this account shall be credited all revenues derived from the sale of residuals and by-products.

This account shall be so kept as to enable the corporation to show in its annual report to the Public Service Commission the amounts of revenue derived from the following sources:

Sale of Gas Coke.
Sale of Coal-Gas Tar.
Sale of Water-Gas Tar.
Sale of Ammoniacal Liquor.
Sale of Other Residuals and By-products.

The amount of revenue from the sale of any residual or by-product is to be determined by the price received at the point of delivery to the purchaser, and any expense incurred by the corporation in effecting delivery is to be charged to the appropriate operating expense account. Residuals and by-products consumed by the corporation shall not be credited to the account "Sale of Residuals and By-products."

JOINT GAS RENT REVENUES.

When any corporation engages in gas operations for the production of some of its product for the benefit of another under an arrangement for apportionment of the expense, if such arrangement provides for the receipt by the corporation of any

profit or return upon its property such profit or return upon property shall, as it accrues, be credited month by month to this account. Such profit or return must be over and above any provision for wear and tear and depreciation of capital in the said production and the amount thereof should be determined by agreement among the parties to the arrangement.

OTHER MISCELLANEOUS GAS REVENUE.

To this account shall be credited all revenues derived from others than municipal corporations for the supply of gas and other gas operations and not provided for in any of the foregoing accounts.

REVENUE FROM OTHER OPERATIONS.

The detailed accounts for revenue from other operations will be provided for in other orders.

UNCOLLECTIBLE GAS BILLS.

When any statement of account for gas sold is judged to be uncollectible, it shall be credited to the account in which theretofore charged, and charged to the account "Uncollectible Gas Bills."

OPERATING EXPENSES.

By the Operating Expenses of a corporation are meant those necessary to the maintenance of the corporate organization, to the production (including herein capital consumed) and disposition of the commodities produced and the services rendered, to the sale of merchandise, and to the collection of the revenues therefor. Those expenses directly incident to the collection of nonoperating revenues and the maintenance of the property from which nonoperating revenues are derived are excluded from operating expenses.

Except where some other meaning is clearly specified in the definitions of the accounts, the following words, wherever used herein, have the meanings below stated.

"Cost" means cash or money cost, and not price based on a term of credit.

"Labor" means human service of whatever character.

"Cost of Labor" includes not only wages, salaries and fees paid to persons for their services, but also such personal expenses incurred by them in connection with the rendition of their services as are reimbursed by the employer.

"Cost of materials and supplies" includes all transportation charges incurred in obtaining the delivery of such materials and supplies upon the premises of the purchaser (or at the place of consumption, if elsewhere) and any special tests made thereon prior to their acceptance; and in case the accounting person or corporation desires, it may include the cost of further transportation to the place of consumption and a suitable proportion of the expenses of the pur-

chasing department, in which case a corresponding credit shall be made to the suitable expense account as hereinafter provided.

"Cost of repairs," when made by the accounting person or corporation, includes cost of labor expended and material consumed less salvage, if any.

I.—Production.

WORK SUPERINTENDENCE

Charge the cost of labor of the engineer in charge of works and his assistants, also day and night foreman and station clerks.

BOILER HOUSE LABOR.

Charge the cost of labor employed in weighing and handling coal, coke and breeze from place of storage to boilers; labor employed in operating boilers and engines, including such labor as shovellers, weighers, boiler firemen and engineers and oilers; and labor employed in pumping oil tar from generators, through separators to storage tanks, and from storage tanks to boilers. Includes such labor as pump house men.

RETORT HOUSE LABOR.

Charge the cost of labor employed in firing benches, charging and recharging retorts, patching and scurfing retorts, cleaning pipes and lids, wetting and handling coke used under benches and handling coal from place of storage to retort house. Includes such labor as foremen, firemen, furnacemen, retort and boiler tenders, patchers, pipemen, lid cleaners, coke wetters, guymen, riggers, shovellers and wheelers.

GENERATOR HOUSE LABOR.

Charge the cost of labor employed in weighing and handling coal and coke from place of storage to generators; labor employed in pumping gas oil from storage tanks to generators; labor employed in operating, firing and cleaning generators. Includes such labor as shovellers, weighers, pumpers, generator firemen and runners.

PURIFIER HOUSE LABOR.

Charge the cost of labor employed in changing purifier house boxes, revivifying oxide, and removing spent oxide to refuse pile. Includes such labor as foremen and laborers.

MISCELLANEOUS LABOR AT WORKS.

Charge the cost of general labor in and about the works not specifically engaged in the manufacture of gas, such as watchmen, janitors and messengers, laborers employed in cleaning up yards, removing snow, and cleaning out refuse pile.

BOILER FUEL.

Charge the cost (in storage pile) of fuel used under boilers.

Includes cost of fuel used, freight, demurrage charges, labor employed in discharging and transferring fuel from point of delivery to place of storage, and cartage employed in discharging and transferring fuel from point of delivery to place of storage.

NOTE.—If boiler fuel is delivered from point of shipper's delivery to boilers by other than boiler house labor, cost of such labor should be added to cost of fuel.

WATER.

Charge the cost of water used for gas production.

FUEL UNDER RETORTS.

Charge the cost (in storage pile) of fuel used under retorts. Includes cost of fuel used, freight, demurrage charges, labor employed in discharging and transferring fuel from point of delivery to storage pile, and cartage employed in discharging and transferring fuel from point of delivery to storage pile.

NOTE.—If fuel is delivered from storage to retort house by other than retort house labor, cost of such labor should be added to cost of fuel.

COAL CARBONIZED.

Charge the cost (in storage pile) of gas coal used in retorts. Includes invoice cost of coal used, freight, demurrage charges, labor employed in discharging and transferring coal from point of shipper's delivery to storage pile, and cartage employed in discharging and transferring coal from point of shipper's delivery to storage pile.

NOTE.—If coal is delivered from storage to retort house by other than retort house labor, cost of such labor to be added to cost of coal.

ENRICHER (COAL GAS).

Charge the cost (in storage) of enricher materials used in enriching coal gas. Includes cost of enricher used, freight, demurrage charges, labor employed in transferring enricher from point of delivery to storage, and cartage employed in discharging enricher from point of delivery to storage.

GENERATOR FUEL.

Charge the cost (in storage pile) of fuel used in generators. Includes invoice cost of fuel used, freight demurrage charges, labor employed in discharging and transferring fuel from point of delivery to storage pile, and cartage employed in discharging and transferring fuel from point of delivery to storage pile.

Note.—If generator fuel is delivered from storage to generator house by other than generator house labor, cost of such labor should be added to cost of generator fuel.

OIL (WATER GAS).

Charge the cost (in storage tanks) of gas oil or naphtha used in making water gas. Includes invoice cost of oil used, freight, demurrage charges, labor employed in getting oil from point of delivery to storage tanks, and cartage employed in getting oil from point of delivery to storage tanks.

PURIFICATION SUPPLIES.

Charge the cost of material used in gas purification. Includes average cost of oxide actually used (the invoice cost and freight, plus shavings, plus labor and cartage necessary to store it, plus the cost of mixing it); and invoice cost of lime actually used.

MISCELLANEOUS WORKS EXPENSE.

Charge the cost of sundry supplies and expenses in connection with the works, not specifically applicable to other accounts. Includes oil, waste and packing, and other small materials of like nature used in gas production; also incidental items, such as telephone, ice, brooms, mops, kerosene, soap, towels and similar expenses.

REPAIRS OF WORKS AND STATION STRUCTURES.

Charge the cost of all repairs to works and station structures as defined in the capital account of that name.

REPAIRS OF BENCHES AND RETORTS.

Charge the cost of all repairs of benches, including the retorts and their settings.

REPAIRS OF GAS GENERATORS.

Charge the cost of all repairs of gas generators as defined in the corresponding capital account.

STEAM PRODUCTION REPAIRS.

Charge the cost of all repairs of boilers, boiler apparatus and other steam production equipment at works.

REPAIRS OF PURIFICATION APPARATUS.

Charge the cost of all repairs of the apparatus for purifying gas as defined in the corresponding capital account.

REPAIRS OF MISCELLANEOUS EQUIPMENT.

Charge the cost of repairing all apparatus used in the production and storage of gas not specifically provided for in the foregoing accounts or in the following account, "Repairs of Holders."

REPAIRS OF TOOLS AND IMPLEMENTS.

Charge the cost of repairing such tools and implements used in the production and storage of gas as have been capitalized.

REPAIRS OF HOLDERS.

Charge the cost of all repairs of gas holders at works or district stations.

GAS STORAGE.

Charge the cost of labor and material (except repairs) employed in storing and regulating the flow of gas to distributing mains by holder pressure. Includes labor of firemen, engineers, valvemen and superintendents; and coal, coke, water and incidentals.

GAS FROM OTHER SOURCES.

Charge the cash purchase price of gas purchased from other companies for distribution through the system of the accounting corporation; also the corporation's proportion of the cost of production (including maintenance, but not including any pure rent or return upon the value of property employed) of gas produced by another concern for the use of the corporation under an arrangement for the sharing of expense.

II.—DISTRIBUTION.

DISTRIBUTION SUPERINTENDENCE.

Charge the cost of all labor employed in superintending the operation of the street department, fitting and repair shops, including the salaries and personal expenses of superintendents, foremen, clerks, timekeepers, messengers, watchmen and janitors employed in the distribution department.

DISTRIBUTION SUPPLIES AND EXPENSES.

Charge the cost of office maintenance and incidental expenses of the street and shop departments, including light, heat, telephone, water, ice, etc. When the distribution office is combined with the works office or commercial office charges like rent, light, etc., should be divided between them in a fixed ratio.

GAS METER AND INSTALLATION WORK.

Charge the cost of labor employed and material used in locking and unlocking meters, building inspection, pumping drip, cleaning service or house pipe with pump, setting, removing, resetting and changing position of meters and temporary repairs of leaks.

IMPROVING UTILIZATION OF GAS.

Charge the cost of all work done for consumers in maintaining the efficiency of their service, including complaint work and other work done in houses beyond the end of the meter outlet connection without special charge. This includes the cost of adjusting or changing location of house pipes, gas burners, fixtures, stoves and appliances; the cost of new pillars, tips, burn-

ers, or devices not chargeable to repair accounts. It does not include such installation expense items as are provided for in the preceding account.

TRANSMISSION PUMPING.

Charge the cost of pumping gas through mains to distributing system, including inspection and regulation of booster governors.

REPAIRS OF GAS MAINS.

Charge the cost of labor and material employed in repairing mains. Includes foremen, inspectors, caulkers, tappers, pavers, drillers, skilled laborers, general laborers and similar workers on street department payrolls, while engaged in repairing, altering, overhauling, changing position of or removing street mains; protecting exposed or undermined mains, searching for and repairing leaks in mains, and paving over any of the above work; also material and cartage in connection with the above work.

REPAIRS OF GAS SERVICES.

Charge the cost of labor and material employed in repairing services. Includes same class of labor as shown under Repairs of Gas Mains, while engaged in repairing, altering, removing, relaying, cutting off, increasing the size of and changing the position of services; searching for and repairing leaks in services; and paving over any of the above work; also material and cartage in connection with the work shown above.

REPAIRS OF GAS METERS.

Charge the cost of testing and repairing consumers' meters.

REPAIRS OF DISTRIBUTION TOOLS AND IMPLEMENTS.

Charge the cost of sharpening and repairing tools and implements used in the street department and the fitting and repair shops and charged to capital accounts.

REPAIRS OF CONSUMERS' INSTALLATION.

Charge the cost of repairs to gas lamps, stoves, engines, and other appliances owned by the corporation and rented to consumers; also repair work upon consumers' piping and similar jobbing repairs.

III.—Municipal Street Lighting.

STREET LAMP OPERATING.

Charge the cost of labor employed in cleaning, lighting and extinguishing street gas lamps; in inspecting and supervising the street lighting district; in reporting on relights and discontinues and watching the hours of lighting and extinguishing; and the incidental expenses of street lamp operating.

STREET LAMP REPAIRS.

Charge up the cost of labor and material consumed in fitting up new lamp-post, refitting standpipe, cleaning services, cutting off services, recaulking columns, removing posts, resetting posts, refitting columns, straightening posts and all other work of a similar character necessary to maintain the street lighting system to the degree of efficiency required by the city; also repaving over openings made necessary by such work.

IV.—Commercial Expense.

COMMERCIAL DEPARTMENT GENERAL LABOR.

Charge the cost of labor of superintendents and assistants, chief clerks, stenographers, general clerks, high bill clerks, switchboard operators, messengers, janitors and watchmen employed in the commercial department.

COMMERCIAL DEPARTMENT ACCOUNTING.

Charge the cost of labor of bookkeepers and clerks employed on consumers' accounts.

COMMERCIAL DEPARTMENT CONTRACTS.

Charge the cost of labor of clerks and other employees in the application or contract bureau.

COMMERCIAL DEPARTMENT COLLECTING.

Charge the cost of labor of regular and prepayment collectors.

METER READING.

Charge the cost of labor of meter readers.

COMMERCIAL OFFICE SUPPLIES AND EXPENSES.

Charge the cost of supplies and the incidental expenses of the commercial office.

PROMOTION OFFICE EXPENSE.

Charge the cost of labor employed and supplies consumed in the supervision and management of the "New Business" branch of the commercial office.

ADVERTISING

Charge the cost of labor and printing in connection with commercial advertising. This does not include the expense of advertising residuals, which is chargeable to the proper residual account.

SOLICITING NEW BUSINESS.

Charge salaries and commissions (including incidental expenses) paid for soliciting new business.

EXHIBITIONS AND DEMONSTRATIONS.

Charge the cost of exhibiting and demonstrating the use of gas appliances for the purpose of increasing and extending the use of gas.

INSTALLING GAS APPLIANCES.

Charge the cost of installing gas stoves and appliances when done by the company without special charge.

V.—General and Miscellaneous Expenses.

GENERAL OFFICERS' SALARIES AND EXPENSES.

Charge the cost of labor of administrative officers; also directors' fees.

GENERAL OFFICE CLERICAL LABOR.

Charge the cost of labor of general officers' assistants and clerks, stenographers, etc.

GENERAL OFFICE SUPPLIES AND EXPENSES.

Charge the cost of office supplies, except stationery; repairs of office furniture; rent of rooms in office buildings; lighting, heating and ventilating general offices; wages of janitors, porters and messengers; janitors' supplies; postage, telephones and telegrams and miscellaneous expenses of the general office not specifically provided for in other accounts.

GENERAL LAW EXPENSES.

Charge monthly proportion of annual retainer paid to counsel, and all law disbursements other than accidents and damages.

Undistributed Expenses.

*INJURIES TO EMPLOYEES.

Charge all expenditures, except liability insurance premiums, on account of employees killed or injured, including legal expense, medical services, settlement of claims, salaries and expenses of claim agents and assistants and wages paid to disabled employees while off duty.

Note.—If it is desirable that the charge to operating expenses shall be upon some arbitrary basis, the amount so charged shall be credited to a reserve account entitled "Casualties Reserve," and the actual disbursements above enumerated charged against said reserve account.

*OTHER INJURIES AND DAMAGES.

Charge all expenditures on account of injuries to the public and damage to property not owned by the accounting corporation, including legal expense, medical services, settlement of claims, salaries and expenses of claim agents and assistants.

Note.—If it is desirable that the charge to operating expense shall be upon some arbitrary basis, the amount so charged shall be credited to a reserve account entitled "Casualties Reserve," and the actual disbursements above enumerated charged against said reserve account.

*Companies are at liberty to distribute items included in these accounts, but all reports to the Commission must agree with the prescribed accounts

*INSURANCE.

Charge the monthly pro rata of premiums paid to insurance companies for fire, fidelity, boiler, casualty, burglar and all other insurance; and of the amount annually set aside as an insurance reserve by a company carrying its own insurance in whole or in part.

Note A.—This does not include fees or premiums paid to underwriters for securing markets or purchasers for bonds, stocks and other securities of the corporation.

Note B.—In their annual returns to the Public Service Commission, companies will be required to report the charges made to this account in respect of each kind of insurance.

*PRINTING AND STATIONERY.

Charge all expenditures for printing and stationery and stationery supplies, except as hereinafter provided. The cost of printing briefs and other legal papers should be charged to "General Law Expenses," "Injuries to Employees" or "Other Injuries and Damages." The cost of printing signs, posters and other advertising matter should be charged to "Advertising." The cost of mechanical calculators, typewriters, etc., when not treated as capital shall, if for use of general offices, be charged to the account "General Office Supplies and Expenses," or if for the use of departmental officers, to the proper accounts.

*STABLE EXPENSES.

Charge to this account the cost of feed, keep and shoeing of horses, harness, wages of stablemen and hostlers, veterinary expense and all other stable expenses; also repairs of vehicles and stable equipment. Cost of horses purchased to replace others should be charged to the capital account "General Stable Equipment."

*STORE EXPENSES.

Charge all salaries and expenses incurred in the operation of storerooms, including cost of sending material and supplies from general to branch storerooms and the collection of scrap material; also the salary and expenses of purchasing agent and his staff.

Miscellaneous Expenses.

COKE EXPENSE.

Charge the cost of all labor and supplies specially consumed and expense specially incurred in the disposal of coke over and above what would be necessitated by such disposition if the coke

*Companies are at liberty to distribute items included in these accounts, but all reports to the Commission must agree with the prescribed accounts.

were not sold. This includes the cost of any special preparation of the coke for sale and the cost of hauling such coke to points of delivery.

TAR EXPENSE.

Charge the cost of all labor and supplies specially consumed and all expense specially incurred in the disposition of tar over and above the expense that would be involved if such tar were consumed by the corporation.

AMMONIA EXPENSE.

To this account shall be charged the cost of all labor and supplies specially consumed and all expense specially incurred in the preparation and sale of ammonia or ammoniacal liquor over and above what would be involved if such liquor were consumed or wasted by the corporation.

OTHER RESIDUALS AND BY-PRODUCTS EXPENSE.

To this account shall be charged the cost of all labor and supplies specially consumed and expense specially incurred in the preparation and disposition of other residuals and by-products than those provided for under the foregoing four accounts, over and above what would be involved if such residuals and by-products were consumed by the corporation or wasted.

GAS FRANCHISE REQUIREMENTS.

Charge the cost of all gas and materials and supplies furnished to municipal corporations, in compliance with franchise requirements, and for which no payment is received by the corporation; also of all direct expense, such as paving and other like matters incurred in compliance with such requirements and for which no reimbursement is received by the corporation. Amounts charged to this account, for which there is no direct money outlay, shall be credited to the below-provided account, "Duplicate Gas Charges, Cr."

MISCELLANEOUS GAS EXPENSES.

Charge all miscellaneous expense incurred in connection with gas operations and not provided for in connection with any of the foregoing accounts or in the next succeeding account.

AMORTIZATION AVERAGE—GAS.

Charge month by month the amount estimated to be necessary to cover such accruing wear and tear in the tangible gas capital of the corporation as is economically incapable of repair; such obsolescence and inadequacy as have accrued during the month; and such portion of the life of intangible fixed capital as has expired or been consumed during the month; also the amount

estimated to be necessary to provide a fund for the replacement of property destroyed or damaged by extraordinary casualties. Amounts charged to this account shall be concurrently credited to the reserve account, "Accrued Amortization of Capital."

Where capital cannot be satisfactorily individualized, it shall be kept in efficient operating condition through repair, and the charges to this account in respect thereof shall be only such as are necessary to cover such wear and tear as is economically irreparable; e. g., in the case of meters, the average condition after the company has reached a substantially uniform going condition will be practically 50 per cent. of new, and economical repair will keep the average condition at this point, so that the charges to this account should in respect of meters be sufficient to accumulate during the average life of the meters in service 50 per cent. of the cost of the meters in service, and thereafter the reserve in respect of meters need only be maintained at this point, and the average condition of meters must be maintained through charges to the operating expense account "Repairs of Meters." Similarly for lamps and fixtures and the like. In the case of buildings, holders, bridges, trestles and other separate structures capable of being readily individualized, charges to this account must be sufficient to provide (in respect of such capital) in the account "Accrued Amortization of Capital" by the time such structures go out of service a reserve capital equal to the original cost thereof, less salvage, to which account such original cost, less salvage, may be charged.

UNDISTRIBUTED INVENTORY ADJUSTMENTS—BALANCE.

At least once a year an inventory of materials and supplies shall be taken, and the difference between the ledger and inventory balances debited or credited to this account, in case it cannot be assigned to a specific account.

DISCOUNTS ON SUPPLIES AND MATERIALS—CR.

Credit to this account all discounts recovered through the prompt payment of bills for materials and supplies.

JOINTLY PRODUCED GAS—CR.

To this account shall be credited the proportion of the production, cost of gas produced under any joint arrangement, which is chargeable against the participating company or companies under such arrangement. This should include all elements of operating expense (including maintenance) chargeable against the participant, but it should not include any element of profit or return upon the value of property employed in such production for joint benefit.

GAS EXPENSES TRANSFERRED—CR.

To this account shall be credited the proportion of the operating expenses (including maintenance, but not any element of pure rent or return upon the value of property employed), properly assignable in respect of gas or other product of gas operations transferred from the gas department of the corporation to another department, as the electric department, street railway department, or other department.

DUPLICATE GAS CHARGES—CR.

To this account shall be credited all charges made to any accounts in gas operating expenses in respect of any gas or other product of gas operations of the corporation consumed therein.

TAXES.

An account shall be kept of the taxes chargeable against each particular class of operations, as, e. g., electric operations, gas operations, street railway operations, etc., and one for those chargeable against non-operating revenues. Each tax account shall be appropriately entitled (as, e. g., "Taxes Assignable to Gas Operations," "Taxes Assignable to Non-operating Revenues," etc.), and shall be so kept as to show separately the following:

State Franchise Tax on Capital Stock.
State Franchise Tax on Gross Earnings.
Special Franchise Tax.
Taxes on Land (exclusive of Improvements.)
Taxes on Improvements on Lands.
Taxes on Personal Property.
Other Taxes (showing in detail.)

To each tax account there shall be charged monthly the amount of taxes accruing during the month, and such amount shall be concurrently credited to the account "Taxes Accrued" (or to the account "Prepaid Taxes," if such tax is prepaid). The amount of taxes accruing during any month shall, where the levy is unknown, be estimated as nearly as may be, and when the levy is ascertained, the matter shall be adjusted during the remainder of the tax year. For example, if at the beginning of a tax year, the taxes on a particular class of property are estimated to be $600 for the year, the monthly charge on account of such tax should be $50 until the amount of the levy becomes known. If, during, say, the fifth month, it is found that the levy for the year is $640, there will already have been charged up four months at $50 per month, leaving $440 to be charged during the remainder of the year, or $55 for the fifth month and each month thereafter during the remainder of the year.

Such taxes as pertain to two or more classes of operations or non-operating revenues should be apportioned with regard to such

operations and non-operating revenues upon an equitable basis, which basis will be required to be reported in the annual report of the corporation to the Public Service Commission.

NON-OPERATING REVENUES.

RENT REVENUES.

To this account shall be credited monthly as they accrue:

LEASEHOLD REVENUES—That is to say, all revenues flowing to the corporation from its interests in property held by others under any lease, the entire term of which is greater than one year. This contemplates that the *taxes* on property so held are *payable by the tenant* in possession and charged by him to the appropriate tax account. If under the contract of lease such taxes are payable by the lessor or his assignee, such taxes shall be charged to this revenue account and not to any of the lessor's tax accounts nor to any of his expense accounts. To the account "Rent Revenues" shall also be credited monthly as they accrue all—

OTHER REVENUES—That is to say, all revenues flowing to the corporation from its interests held in property held by others under any lease or contract for a term not to exceed one year from the beginning of the term or held at will or upon sufferance. This account contemplates that the *taxes* on property of this character *shall be paid by the landlord* and charged to the appropriate tax account. If under the contract covering the holding for terms of one year or less, or at will, the taxes are to be paid by the tenant, the amount of such taxes shall be credited month by month to this account as they accrue, and shall correspondingly be charged to the tax account covering taxes on property of this character.

Entries in this account must be made in such wise as to show separately the classes above indicated, which will be required to be stated separately in the annual reports to the Public Service Commission.

INTEREST REVENUES.

To this account shall be accredited monthly as it accrues all

INTEREST FROM BOUND INVESTMENTS—That is to say, all interest accruing to the corporation upon such of its interest-bearing bound investments (as hereinbefore defined) as are liabilities of solvent concerns and individuals. To the account "Interest Revenue" shall also be credited monthly as it accrues all

INTEREST FROM FREE INVESTMENT—That is to say, all interest accruing to the corporation upon such of its interest-bearing free investments (as hereinbefore defined)) as are liabilities of solvent concerns and individuals. To it shall also be credited monthly as it accrues all

INTEREST FROM OTHER SOURCES—That is to say, all interest accruing to the corporation upon its interest-bearing current assets, special deposits, and all other assets not provided for under the two foregoing heads, where such interest is a liability, actual or contingent, of solvent concerns and individuals.

Entries in this account must be made in such wise as to show separately the classes above indicated, which will be required to be stated separately in the annual reports to the Public Service Commission.

DIVIDEND REVENUES.

To this account shall be credited, at their cash value and as of the date when collectible, all

DIVIDENDS ON BOUND INVESTMENTS—That is to say, all dividends declared by solvent concerns upon stocks held by the corporation among its bound investments. Also, all

DIVIDENDS ON FREE INVESTMENTS—That is to say, all dividends declared by solvent concerns upon stocks held by the corporation among its free investments.

Entries in this account must be made in such wise as to show separately the classes above indicated, which will be required to be stated separately in the annual reports to the Public Service Commission.

PROFITS FROM OPERATIONS OF OTHERS.

Whenever, in accordance with the terms of any contract, the corporation is entitled to participate in the profits resulting from the operations of others, all revenues accruing to the corporation from such source shall be credited to this account.

MISCELLANEOUS NON-OPERATING REVENUES.

To this account shall be credited all non-operating revenues accruing to the corporation and not provided for in any of the foregoing accounts.

UNCOLLECTIBLE NON-OPERATING REVENUES.

When any non-operating revenues are judged by the corporation to be uncollectible, the amount thereof shall be credited to the account in which theretofore charged and charged to the account "Uncollectible Non-operating Revenues."

Note.—In annual reports to the Public Service Commission, this account will be required to be fully analyzed.

NON-OPERATING EXPENSES.

RENT EXPENSE.

To this account shall be charged all matters provided for under the following two heads:

LEASEHOLD EXPENSE—That is to say, all expense arising in con-

nection with the procuring of revenues from leaseholds having terms greater than one year, including the cost of negotiating contracts, advertising for tenants, fees paid conveyancers, collector's commissions, cost of enforcing payment of rent, cost of ousting tenants, etc., and all the other expense arising in connection with such leaseholds. This applies only to leases conveying the property out of the possession of the corporation, and it includes the expense accruing while the property is idle and awaiting an occupant. This account includes cost of maintenance of the property when such cost is borne by the corporation. Such maintenance includes depreciation as well as reparable wear and tear. It does not include taxes.

OTHER RENT EXPENSE—This head is analogous to the preceding head "Leasehold Expense," and differs from that only in that this provides for expense in connection with property let for a term of one year or less.

INTEREST EXPENSE.

To this account shall be charged all expenses arising in connection with procuring interest upon investments, such as expense of collection, expense of investigating delay in payment, expense of enforcing payment, and the like. It does not include taxes on such investments.

DIVIDEND EXPENSE.

To this account shall be charged all expense arising in connection with the collection of dividends on stocks of other corporations. This shall include also any expense incurred in the investigation of the affairs of the corporations whose stocks are held, whether for the purpose of detecting mismanagement or for the purpose of inducing the declaration of dividends, also all expense connected with enforcing payment of dividends when declared. It does not include taxes on such investments.

OTHERS' OPERATIONS EXPENSE.

To this account shall be charged the cost of negotiating contracts whereunder the corporation is to participate in profits resulting from the operations of others, also all expense of collecting the corporation's proportion of such profits, and all expense connected with procuring the modification or the dissolution of any such contract.

MISCELLANEOUS NON-OPERATING EXPENSE.

To this account shall be charged all non-operating expense (as hereinbefore defined) which is not provided for in the foregoing accounts.

NON-OPERATING TAXES.

An account shall also be kept to which shall be charged all taxes accruing upon non-operating property and all assignable to non-operating revenues. This account shall be called "Non-operating Taxes," and it shall be kept in a manner analogous to the taxes accounts already defined.

INCOME DEDUCTION ACCOUNTS.

The sum total of the credit balances in the revenue accounts for any particular operation at the close of a fiscal period gives the gross revenue from that operation for that period. This gross revenue diminished by the uncollectible bills, the operating expenses, and the taxes assignable to such operation for the period gives the income from that operation for the period. Similarly for the non-operating revenues, the non-operating expenses and the non-operating taxes.

The aggregate of the incomes from the several operations and the non-operating income is the gross corporate income. As has before been said, the gross corporate income is, in the usual case, subject to various compulsory deductions, and these will hereinafter be called "Income Deductions."

INTEREST ACCRUED ON DEBT AND STOCKS.

To this account shall be charged and credited monthly (or as otherwise below directed) all matters provided for under the following six heads:

Absolute Interest Accrued on Funded Debt.—This head includes all interest accruing absolutely on the outstanding funded debt of the corporation.

Contingent Interest Accrued on Funded Debt.—This head includes when the contingency occurs all interest accruing contingently on the outstanding funded debt of the corporation. This includes such matters as interest on income bonds.

Interest Accrued on Receiver's Certificates.—This head includes all interest accruing on receiver's certificates which are liens upon the property of the corporation or any part of it.

Interest Accrued on Other Unfunded Debt.—This head includes all interest accruing on all unfunded debt of the corporation except receiver's certificates.

Interest Accrued on Debenture Stocks.—This head includes all interest accruing on the outstanding debenture stocks of the corporation.

Interest Accrued on Treasury Holdings, Cr.—This head includes all interest accruing on the outstanding securities of the corporation held in its treasury as provided in the several treasury holdings accounts before defined.

Entries in the account "Interest Accrued on Debt and Stocks" must be in such wise as to show separately the classes above indi-

cated which will be required to be stated separately in the annual reports to the Public Service Commission.

RENT DEDUCTIONS ACCRUED.

To this account shall be charged month by month all pure rents accruing upon property held by the corporation under some form of leasehold. By pure rent is meant one containing no elements of maintenance or taxes, also that portion of gross rents remaining after the exclusion of all maintenance and taxes covered by such gross rents. Maintenance and taxes included in gross rents applying to property held under a grant covering more than one year shall be charged respectively to appropriate expense and tax accounts, and where they are not determined under or in accordance with the terms of the contract of lease they should be determined by agreement of the parties.

To this account shall be charged gross rents accruing upon property held under grants covering not more than one year, or under grants terminable at will or held upon sufferance.

To this account shall also be charged all profit or return upon value of property employed which may be involved in payments made or liabilities incurred by the corporation in respect of power or other thing produced by another concern under an arrangement for production at joint expense, the amount of such profit or return being determined by agreement of the parties to the arrangement. This does not apply to the case of purchase and sale of power or other thing produced.

Rents for furnished offices should not be charged to this account, but to the appropriate expense account.

SINKING FUND ACCRUALS.

To this account shall be charged month by month all accruals required to be made to sinking funds in accordance with the provisions of mortgages or other contracts requiring the establishment of sinking funds. All accruals to sinking or other funds created voluntarily by the corporation and not in pursuance of the provisions of any mortgage or other contract or of the requirements of law shall be excluded herefrom.

GUARANTIES OF PAYMENTS BY OR FOR OTHERS.

To this account shall be charged all unsecured accruals of obligations arising under contracts whereby the corporation has guaranteed the *annual or more frequent periodic* payment of money or performance of other obligation on the part of another corporation or person and because of the default of such other corporation or person the liability of the present corporation has become actual. This account does not include such matters as guaranties of payment of principal of funded debt and other similar

things relating to a series of years, nor does it include any guaranties for which the corporation has protected itself through taking ample security. If insufficient security has been taken in respect of such annual or more frequent payments, the unsecured *portion* thereof shall be charged to this account.

LOSS ON OPERATIONS OF OTHERS.

Whenever in accordance with the terms of any contract the corporation is bound to contribute toward reimbursement of the losses resulting from the operations of others, all liabilities accruing to the corporation from such source shall be charged to this account.

OTHER CONTRACTUAL DEDUCTIONS FROM INCOME.

To this account shall be charged month by month all contractual liabilities arising from annual or other more frequent periodic matters and not includible in any of the foregoing accounts. This account includes only deductions from income and not any liabilities arising in exchange for goods or other things purchased.

AMORTIZATION OF LANDED CAPITAL.

To this account shall be charged at the close of any fiscal period such proportion of the original money cost (estimated if not known) of landed capital as is necessary to cover the proportion of the life thereof expired during such period.

AMORTIZATION OF DEBT DISCOUNT AND EXPENSE.

To this account shall be charged at or before the close of any fiscal period that proportion of the amortized discount and debt expense on outstanding debt which is applicable to the period This proportion shall be determined by the appliecation of a rule, the uniform application of which during the interval between the issue and the maturity of any debt will completely amortize or wipe out the discount at which such debt was issued and the debt expense connected therewith. Such amortization may at the option of the corporation be earlier effected by charging all or any portion of such discount and debt expense to the account "Other Deductions from Surplus" immediately upon issue of the debt or at any time thereafter.

Note A.—The amounts charged to this acount shall be concurrently credited to the account called "Accrued Amortization of Capital."

Note B.—When any landed capital expires or is otherwise retired from service (as e. g., through sale) the capital account (if any) or other indicant account (if any) originally charged therewith shall be credited with the amount as originally charged, the account "Accrued Amortization of Capital" shall be debited with all amounts theretofore credited to such account in respect of such landed capital so going out of service, the appropriation account shall be debited with the proceeds of sale (if any) and any necessary adjustment shall be made through the "Corporate Surplus or Deficit" account.

AMORTIZATION OF PREMIUM ON DEBT—CR.

To this account shall be credited at or after the close of any fiscal period the proportion of the premium at which outstanding debt was issued which is applicable to the period. This proportion may be determined by the application of a rule, the uniform application of which during the interval between the issue and the maturity of any debt will completely amortize or wipe out the premium at which such debt was issued, and may at the option of the corporation be effected by crediting all of such premium to this account only upon the maturity of the debt.

APPROPRIATION ACCOUNTS.

The balance resulting from closing the foregoing "Income Deduction" accounts for any fiscal period into gross corporate income for that period gives the net corporate income for the period. The net corporate income being of the same nature as the corporate surplus shall be closed into the "Corporate Surplus or Deficit" account. The group of accounts which show for any fiscal period the changes in the "Corporate Surplus or Deficit" account will be designated the "Appropriation Accounts," for the reason that substantially all of them are subject only to the discretion of the corporation. At the end of each fiscal period each of the "Appropriation" accounts shall be closed into the "Corporate Surplus or Deficit" account.

BAD DEBTS COLLECTED.

When any debt theretofore written off as a bad debt is collected, the amount of the collection shall be credited to this account. Expense involved in such collection shall be charged to this account.

OTHER ADDITIONS TO SURPLUS.

To this account shall be credited all additions to surplus because of erroneous accounting in prior fiscal periods and all other additions to surplus not elsewhere provided for. A complete analysis of this account will be required in annual reports of corporations to the Public Service Commission.

EXPENSES ELSEWHERE UNPROVIDED FOR.

To this account shall be charged all expenses not chargeable as a part of operating expenses or of non-operating expenses, such as fines levied on the corporation for violation of law, for misfeasance, for nonfeasance, etc., fines levied on directors, officers and other employees and assumed by the corporation, donations to campaign funds, to churches and other associations, and other like expenses and outgoes.

DIVIDENDS ON OUTSTANDING STOCKS.

When any dividend is declared upon any outstanding stocks of the corporation, the amount of such dividend shall thereupon

be charged to this account. All entries to this account shall show the amount of stock upon which the dividend is declared, the class of such stock and the rate of the dividend, as well as the amount thereof, and if the dividend is payable in any other thing than money, such thing shall be described in the entry with sufficient particularity to identify it, and the actual money value thereof shall be stated as the amount of the dividend.

When any dividend is declared upon the stocks of the corporation held in its treasury the amount of such dividend thereon shall be credited to this account. Entries of credits to this account shall be made with the same degree of particularity as is prescribed in the preceding paragraph.

AMORTIZATION ELSEWHERE UNPROVIDED FOR.

To this account shall be charged such amortization as is not elsewhere provided for. This account provides for all optional amortization, such as that of discount on stocks outstanding, abandoned property, etc.

APPROPRIATIONS TO RESERVES.

To this account shall be charged such amortization as is not to reserves.

GIFTS TO CONTROLLED CORPORATIONS.

To this account shall be charged all gifts made by the corporation to its controlled corporations, also such portions of all advances thereto as are not carried as assets.

OTHER APPROPRIATIONS.

To this account shall be charged all optional appropriations made by the corporation and not elsewhere provided for. A complete analysis of this account will be required in annual reports to the Public Service Commission.

BAD DEBTS WRITTEN OFF.

To this account shall be charged the amount by which debts are written off from the accounts of the corporation when they become stale and are placed in the "bad debt" class. Such "uncollectible bills" as have been provided for in the heretofore defined "Uncollectible Bills" accounts must not be included in this account.

OTHER DEDUCTIONS FROM SURPLUS.

To this account shall be charged all deductions from surplus because of erroneous accounting in prior fiscal periods, and all other deductions from surplus not elsewhere provided for. A complete analysis of this account will be required in annual reports of corporations to the Public Service Commission.

LIST OF ACCOUNTS

SCHEDULE A.—BALANCE SHEET ACCOUNTS

CAPITAL ACCOUNTS.

FIXED CAPITAL 700
Fixed Capital Account, June 30, 1907 703
Register of Fixed Capital Installed since June 30, 1907 704
Land Devoted to Gas Operations 705
Organization 706
Franchises (Gas) 706
Patent Rights (Gas) 707
Other Intangible Gas Capital 707
Works and Station Structures 708
Holders 708
Furnaces and Boilers (Gas) 708
Prime Movers (Gas) 708
Benches and Retorts 709
Gas Generators 709
Purification Apparatus 709
Accessory Equipment at Works 709
Trunk Lines and Mains 709
Services (Gas) 709
Meters (Gas) 710
Gas Meter Installation 710
Municipal Street Lighting Fixtures (Gas) 710
Gas Motors 710
Gas Stoves 710
Miscellaneous Structures 711
General Office Equipment 711
General Shop Equipment 711
General Store Equipment 712
General Stable Equipment 712
Gas Tools and Implements 712
Gas Testing Apparatus and Laboratory Equipment 712
Other Tangible Gas Capital 712
Undistributed Construction Expenditures 713
A. Law Expenses During Construction 713
B. Injuries and Damages During Construction 713
C. Taxes During Construction 713
D. Miscellaneous Construction Expenses 714
E. Interest During Construction 714
Electric Capital 714

FIXED CAPITAL, *Continued.*

Railroad Capital 714
Street Railroad Capital 714
Land in Other Departments 715
Franchises in Other Departments 715
Patent Rights in Other Departments 715
Other Intangible Capital in Other Departments 715
Tangible Capital in Other Departments 716

FLOATING CAPITAL 716

Materials and Supplies 716
Cash Assets 716
Interest and Dividends Receivable 717
Bills Receivable 717
Accounts Receivable 717
Other Current Assets 717

TREASURY HOLDINGS 717

INVESTMENTS 718

SPECIAL DEPOSITS 718

Coupon Special Deposits 718
Dividend Special Deposits 718
Other Special Deposits 719

PREPAYMENT ACCOUNTS:

Prepaid Taxes 719
Prepaid Insurance 719
Prepaid Rents 720
Other Prepayments 720

SUSPENSE ACCOUNTS 720

Unamortized Debt Discount and Expense 720
Unamortized Discount on Stocks Outstanding 721
Other Suspense 721

DEBT 721

Funded 722
Unfunded 722
Taxes Accrued 722
Receivers' Certificates 723
Judgments Unpaid 723
Interest Accrued 723
Dividends Declared 723
Bills Payable 724
Consumers' Deposits 724
Accounts Payable 724
Other Unfunded Debt 724

RESERVES 724
Permanent 724
Premiums on Stocks Outstanding 724
Other Permanent Reserves 725
Temporary 725
Contractual 725
Non-contractual 725
Required 725
Unvouchered Items 725
Accrued Amortization of Capital 726
Unamortized Premium on Debt 726
Casualties Reserve 726
Repairs Reserve 727
Self-Insurance Reserve 727
Other Required Reserves 728
Optional 728
STOCKS 728

SCHEDULE B—INCOME ACCOUNT

OPERATING REVENUES 731
Municipal Street Lighting—Gas 731
Lighting Municipal Buildings—Gas 731
Municipal Heat and Power—Gas 731
Miscellaneous Gas Revenues—Municipal 731
Gas Supplied to Other Companies 731
Metered Gas for Commercial Lighting 732
Prepaid Gas 732
Gas for Commercial Heat and Power 732
Commissions on Others' Gas 732
Rent of Gas Meters 732
Rent of Gas Stoves, Engines, etc 732
Gas Jobbing Revenue 733
Profit on Sales of Gas Appliances 733
Sale of Residuals and By-products 733
Joint Gas Rent Revenues 733
Other Miscellaneous Gas Revenues 734
Revenue from Other Operations 734

UNCOLLECTIBLE GAS BILLS 734

OPERATING EXPENSES 734

I.—Production.

Works Superintendence 735
Boiler House Labor 735

I.—Production, *Continued.*

Retort House Labor 735
Generator House Labor 735
Purifier House Labor 735
Miscellaneous Labor at Works 735
Boiler Fuel 735
Water 736
Fuel Under Retorts 736
Coal Carbonized 736
Enricher (Coal Gas) 736
Generator Fuel 736
Oil (Water Gas) 737
Purification Supplies 737
Miscellaneous Works Expense 737
Repairs of Works and Station Structures 737
Repairs of Benches and Retorts 737
Repairs of Gas Generators 737
Steam Production Repairs 737
Repairs of Purification Apparatus 737
Repairs of Miscellaneous Equipment 737
Repairs of Tools and Implements 737
Repairs of Holders 738
Gas Storage 738
Gas from Other Sources 738

II.—Distribution.

Distribution Superintendence 738
Distribution Supplies and Expenses 738
Gas Meter and Installation Work 738
Improving the Utilization of Gas 738
Transmission Pumping 739
Repairs of Gas Mains 739
Repairs of Gas Services 739
Repairs of Gas Meters 739
Repairs of Distribution Tools and Implements 739
Repairs of Consumers' Installation 739

III.—Municipal Street Lighting.

Street Lamp Operating 739
Street Lamp Repairs 740

IV.—Commercial Expense.

Commercial Department General Labor 740
Commercial Department Accounting 740
Commercial Department Contracts 740

IV.—Commercial Expense, *Continued.*

Commercial Department Collections..... 740
Meter Reading..... 740
Commercial Office Supplies and Expenses..... 740
Promotion Office Expense..... 740
Advertising..... 740
Soliciting New Business..... 740
Exhibitions and Demonstrations..... 741
Installing Gas Appliances..... 741

V.—General and Miscellaneous Expenses.

General Officers' Salaries and Expenses..... 741
General Office Clerical Labor..... 741
General Office Supplies and Expenses..... 741
General Law Expenses..... 741
* Injuries to Employees..... 741
* Other Injuries and Damages..... 741
* Insurance..... 742
* Printing and Stationery..... 742
* Stable Expenses..... 742
* Store Expenses..... 742
Coke Expense..... 742
Tar Expense..... 743
Ammonia Expense..... 743
Other Residuals and By-Products Expense..... 743
Gas Franchise Requirements..... 743
Miscellaneous Gas Expenses..... 743
Amortization Average—Gas..... 743
Undistributed Inventory Adjustments—Balance..... 744
Discounts on Materials and Supplies—Cr..... 744
Jointly Produced Gas—Cr..... 744
Gas Expenses Transferred—Cr..... 745
Duplicate Gas Charges—Cr..... 745
Taxes..... 745

Non-operating Revenues..... 746
Rent Revenues..... 746
Interest Revenues..... 746
Dividend Revenues..... 747
Profits from Operations of Others..... 747
Miscellaneous Non-operating Revenues..... 747
Uncollectible Non-operating Revenues..... 747

* Charges to the accounts thus designated may be distributed over other expense accounts, provided that the accounting company shall report to the Public Service Commission in accordance with the accounts prescribed.

NON-OPERATING EXPENSES 747
Rent Expense 747
Interest Expense 748
Dividend Expense 748
Others' Operations Expense 748
Miscellaneous Non-operating Expense 748

NON-OPERATING TAXES 749

INCOME DEDUCTIONS 749
Interest Accrued on Debt and Stocks 749
Rent Deductions Accrued 750
Sinking Fund Accruals 750
Guaranties of Payments by or for Others 750
Loss on Operations of Others 751
Other Contractual Deductions from Income 751
Amortization of Landed Capital 751
Amortization of Debt Discount and Expense 751
Amortization of Premium on Debt—Cr 752

APPROPRIATION ACCOUNTS 752
Bad Debts Collected 752
Other Additions to Surplus 752
Expenses Elsewhere Unprovided for 752
Dividends on Outstanding Stocks 752
Amortization Elsewhere Unprovided for 753
Appropriations to Reserves 753
Gifts to Controlled Corporations 753
Other Appropriations 753
Bad Debts Written Off 753
Other Deductions from Surplus 753

REPORT OF PROGRESS OF THE SUB-COMMITTEE ON PIPE STANDARDS.

During the year the time has been spent in studying the individual designs in the 1898 and 1905 Standards, and the drawings attached have been made up and the weights figured. This has consumed so much time that it has not been possible for the Committee to get together, and it is herewith presented to the Institute simply as a report of progress and with the request that the members examine it carefully and make such suggestions during this meeting, or as soon thereafter as possible, so that the Committee may have the benefit of these suggestions in its work.

A. S. MILLER, *Chairman.*
GEORGE J. ROBERTS,
W. C. MORRIS,
J. H. EUSTACE,
I. BUTTERWORTH,
Sub-Committee on Pipe Standards.

PROPOSED CAST IRON BELL AND SPIGOT PIPES AND SPECIALS.

In preparing the proposed designs of Cast Iron Bell and Spigot Pipes and Specials, it was desired to use such features of the 1898 and 1905 Standards as would result in producing designs that would be as light or lighter than those of either Standard, and also be consistent with strength and good practice.

In some instances the proposed designs are heavier than those of the Standards mentioned to give necessary strength.

The bends, crosses and tees were shortened to make them lighter, more easily handled, and to occupy less space.

The "S" bends are new and were not shown in the 1898 and 1905 Standards.

No changes are proposed in the Flange Pipe heretofore adopted.

The proposed Standards were referred by the Chairman to the members of the Committee, whose suggestions and criticisms, together with the comments thereon of the Chairman of the Committee are herewith submitted.

References:

Mr. Butterworth's letter of July 27th, 1908.
Mr. Roberts' letter of August 18th, 1908.
Mr. Eustace's letter of September 1st, 1908.
Mr. Morris' letter of September 9th, 1908.

Bell and Spigot Pipe.

Mr. Butterworth.—Objects to decrease in weight of 4-in. size and to changes in diameter and depth of bells. (Should not be less than 1905 standard.)

Mr. Roberts.—Objects to decrease in weight of 4-in., 6-in. and 8-in. sizes, and thinks no 3-in. pipe should be recommended.

Mr. Eustace.—Makes no specific objection, except as to possible cost of change of patterns.

Mr. Morris.—Notes irregularities in lead room. Suggests uniform lead room of ½-in. Also suggests that the proposed standard be extended to 48-in. pipe and that provision be made for increasing thickness of metal by a reduction of the core diameters when desirable.

The proposed 4-inch pipe is 0.375-inch thick against 0.40-inch in the 1905 standard.

The proposed 6-inch pipe is 0.4375 ($\frac{7}{16}$) inch thick, against 0.43-inch in the 1905 standard.

The proposed 8-inch pipe is 0.4375 ($\frac{7}{16}$) inch thick, against 0.46-inch in the 1905 standard.

The depth of bell in the 4-in., 6-in., 8-in., 10-in., 20-in. and 36-in. pipe is the same in the proposed standard as in the 1905 standard. In the 12-in. and 16-in. sizes the proposed depth is ½-in. less; and in the 24-in. and 30-in. sizes, it is ¼-in. less than in the 1905 standard bell.

The lead room in the proposed standard is the same as in the 1905 standard in the 4-in., 8-in., 10-in. and 12-in. sizes. In the 6-in. size it is 1/16 in. less; in the 16-in. size it is .025 in. greater; in the 20-in. size it is .045 in. less. These irregularities should not exist and are due to errors. In the 24-in. and 30-in. sizes the lead room is ⅛ in. less than in the 1905 standard, being ½ in. instead of ⅝ in. It is suggested that these errors be corrected and that the lead room be made uniformly ½ in., as recommended by Mr. Morris, or that it be made ½ in. for pipe up to 16 in. in diameter, and ⅝ in. for pipe above 16 in. in diameter.

The 3-in. pipe is shown for the convenience of the smaller companies.

The proposed bells are of practically the same design as those of the 1898 standard.

Quarter Bends.

Mr. Butterworth—No criticisms.

Mr. Roberts—Suggests 2-bell bends as in 1905 standard. His criticisms as to thickness of metal also apply here.

Mr. Eustace—No criticisms.

Mr. Morris—No criticisms, except that proposed standard should be extended to include 48-in. size.

Eighth Bends.

Mr. Butterworth—Approves proposed design.

Mr. Roberts—Approves proposed design, but suggests additional patterns (2-bell and circle bends).

Mr. Eustace—No criticisms.

Mr. Morris—No criticisms, except that standard should be extended to include 48-in.

Sixteenth Bends.

Mr. Butterworth—No criticisms.

Mr. Roberts—Same comments as for other bends.

Mr. Eustace—No criticisms.

Mr. Morris—Same comments as for other bends.

THE CHAIRMAN—The minor changes in bends to which Mr. Roberts alludes are due to the fact that in the proposed standard, the radius of curvature is the same for all bends for the same size of pipe, whereas this is not the case in the 1905 standard.

BUSHINGS.

MR. BUTTERWORTH—No criticisms.

MR. ROBERTS—Calls attention to slight changes. Thinks 1905 standard good enough.

MR. EUSTACE—No criticism.

MR. MORRIS—No criticism.

CAPS.

MR. BUTTERWORTH—No criticisms.

MR. ROBERTS—Calls attention to absence of reinforcing ribs and to thinner metal in discs, and to differences in bells.

MR. EUSTACE—Thinks discs too thin in sizes above 16-in. ("Out of proportion.")

MR. MORRIS—No criticism, except that standard should be extended to include 48-in.

DRIP POTS.

MR. BUTTERWORTH—Does not believe in Line Pots. Advises Side Drips.

MR. ROBERTS—Objects to the proposed pots on the ground that capacities are not proportioned to the size of the main, and on the ground that they are harder to cast. He also notes that no yard or holder pots are shown. Advised 1905 pattern.

MR. EUSTACE—Also believes in side pots. (Sketch not sent as specified.)

MR. MORRIS—No criticism, except to extend the standard to include 48-in.

HAT FLANGES.

MR. BUTTERWORTH—Does not use "Hub Flanges."

MR. ROBERTS—Thinks outlet should go as high as 12-in. instead of 6-in.

MR. EUSTACE—Makes no comment.

Mr. Morris—Objects to long necks and thinks standard should be extended to include 20-in.x8-in., 24-in.x8-in., 30-in.x8-in. and 36-in.x8-in. sizes.

Crosses and Tees.

Mr. Butterworth—No criticisms.

Mr. Roberts—Approves proposed design as an improvement.

Mr. Eustace—Makes no specific comments.

Mr. Morris—No criticism, except that standard should be extended to include 48-in. sizes.

Plugs.

Mr. Butterworth—No criticism.

Mr. Roberts—Notes changes in design of plugs and increase in weight.

Mr. Eustace—Does not mention.

Mr. Morris—No criticism, except that standard should be extended to include 48-in.

Reducers.

Mr. Butterworth—Wants concentric as well as eccentric reducers.

Mr. Roberts—Approves proposed design, but seems to want concentric reducers also.

Mr. Eustace—Does not mention.

Mr. Morris—No criticism, except to extend standard to include 48-in. sizes.

Split Sleeves, Service Sleeves and Split Tees.

Mr. Butterworth—"The general tendency is to get split sleeves too light." (This remark evidently refers to previous designs.) Suggests shoulder in flange to facilitate fitting. Considers proposed length correct. Approves service sleeves.

Mr. Roberts—Notes changes in design of flanges and increase in thickness of metal.

Mr. Eustace—Does not mention.

Mr. Morris—No criticism, except that standard should be extended to include 48-in.

3
4
6
8
16
20
24
12'-0"
3" Diam.
4" Diam.
6" Diam.
16" Diam.
20" Diam.
24" Diam.
Est. Wgt. of Bell to line "AA" 12.5 lbs.
Est. Wgt. per foot of straight pipe 10.2 lbs.
Est. Wgt. of Bell to line "AA" 19.6 lbs.
Est. Wgt. per foot of straight pipe 16.1 lbs.
Est. Wgt. of Bell to line "AA" 25.0 lbs.
Est. Wgt. per foot of straight pipe 27.6 lbs.
Est. Wgt. of Bell to line "AA" 115.9 lbs.
Est. Wgt. per foot of straight pipe 97.77 lbs.
Est. Wgt. of Bell to line "AA" 147.9 lbs.
Est. Wgt. per foot of straight pipe 135.96 lbs.
Est. Wgt. of Bell to line "AA"
Est. Wgt. per foot of straight pipe 172.22 lbs.

PROPOSED CAST-IRON BELL & S

PILOT PIPE.

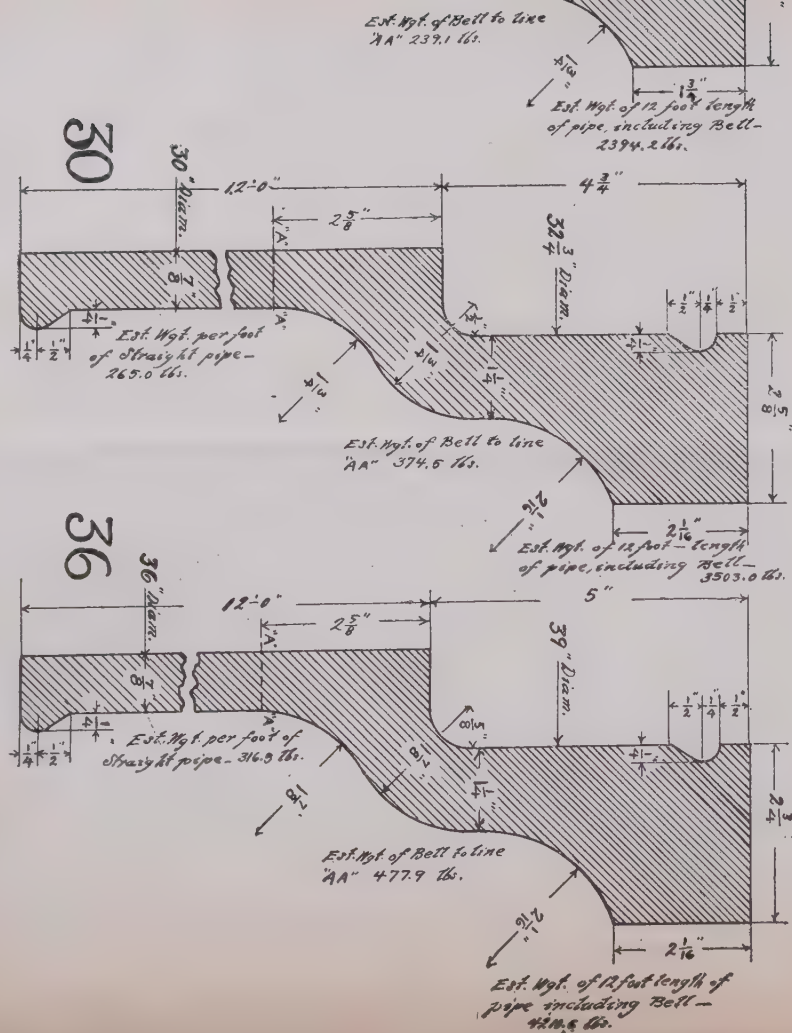
Est. Wgt. of Bell to line "AA" 239.1 lbs.
Est. Wgt. of 12 foot length of pipe, including Bell— 2394.2 lbs.
30
30" Diam.
12'-0"
4 3/4"
2 5/8"
32 3/4" Diam.
Est. Wgt. per foot of Straight pipe— 265.0 lbs.
Est. Wgt. of Bell to line "AA" 374.6 lbs.
Est. Wgt. of 12 foot length of pipe, including Bell— 3503.0 lbs.
36
36" Diam.
12'-0"
5"
2 5/8"
39" Diam.
Est. Wgt. per foot of Straight pipe— 316.9 lbs.
Est. Wgt. of Bell to line "AA" 477.9 lbs.
Est. Wgt. of 12 foot length of pipe including Bell— 4114.6 lbs.
Est. Wgt. per foot of Straight pipe— 36.2 lbs.
Est. Wgt. of Bell to line "AA"— 38.8 lbs.
Est. Wgt. of 12 foot length of pipe including Bell— 469.5 lbs.
10
10" Diam.
12'-0"
1 5/8"
12" Diam.
4"
Est. Wgt. per foot of Straight pipe— 51.5 lbs.
Est. Wgt. of Bell to line "AA"— 55.5 lbs.
Est. Wgt. of 12 foot length of pipe including Bell— 668.1 lbs.
12
12" Diam.
12'-0"
1 7/8"
14" Diam.
4"
Est. Wgt. per foot of Straight pipe— 66.46 lbs.
Est. Wgt. of Bell to line "AA"— 82.3 lbs.
Est. Wgt. of 12 foot length of pipe including Bell— 860.0 lbs.

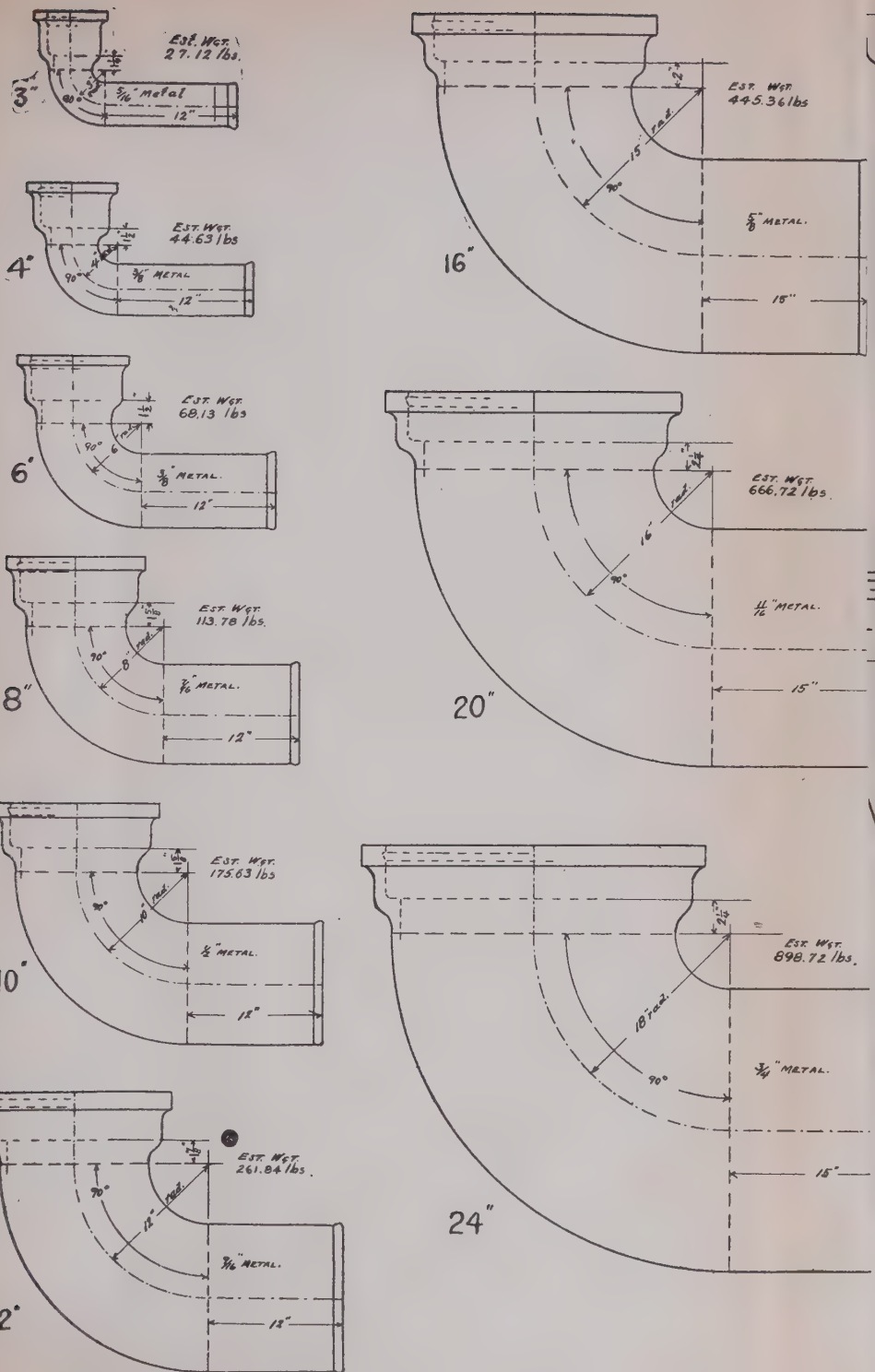
3"
Est. Wgt. 27.12 lbs.
5/16" Metal
12"
4"
Est. Wgt. 44.63 lbs
3/8" Metal
12"
6"
Est. Wgt. 68.13 lbs
3/8" Metal.
12"
8"
Est. Wgt. 113.78 lbs.
7/16" Metal.
12"
10"
Est. Wgt. 175.63 lbs
1/2" Metal.
12"
12"
Est. Wgt. 261.84 lbs.
9/16" Metal.
12"
16"
Est. Wgt. 445.36 lbs
5/8" Metal.
15"
20"
Est. Wgt. 666.72 lbs.
11/16" Metal.
15"
24"
Est. Wgt. 898.72 lbs.
3/4" Metal.
15"

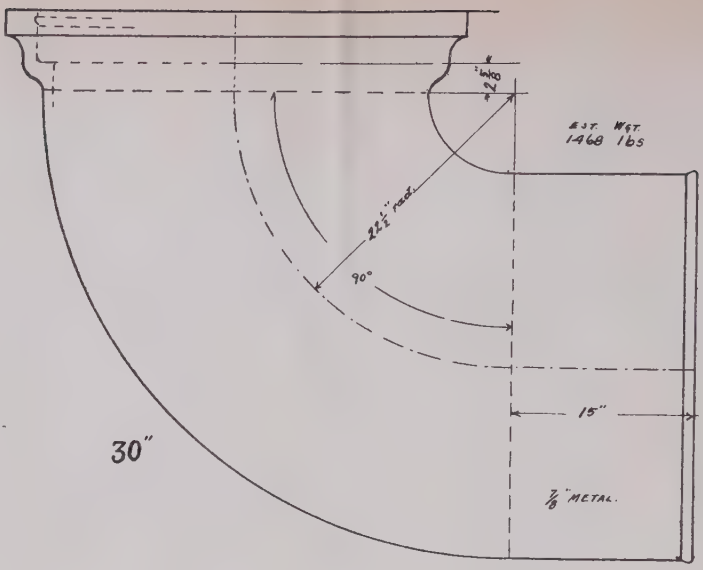

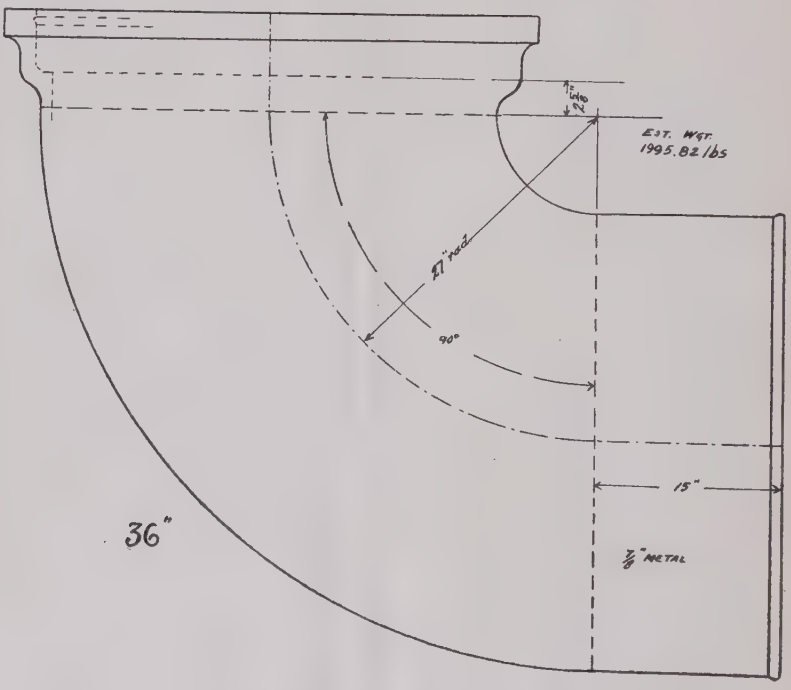

PROPOSED CAST-IRON QUARTER-BENDS.

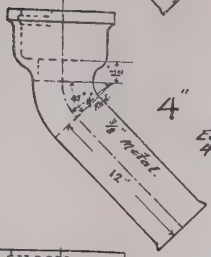

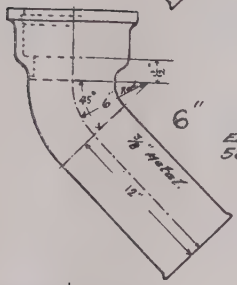

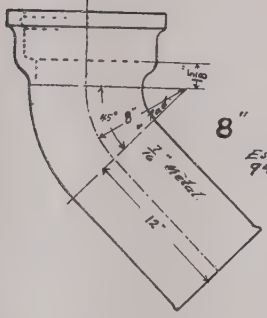

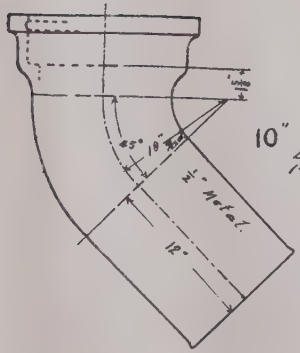

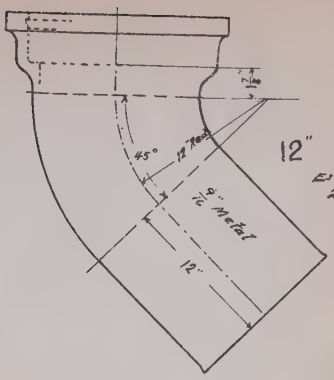

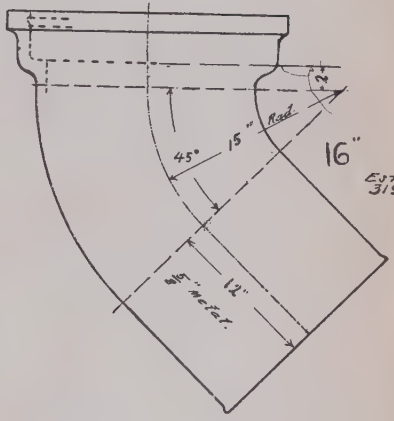

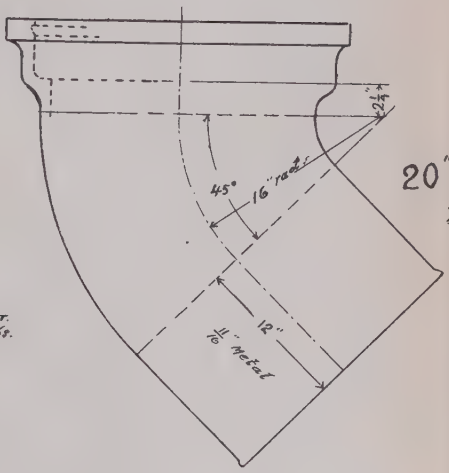

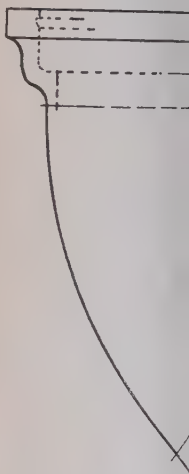

PROPOSED CAST-I

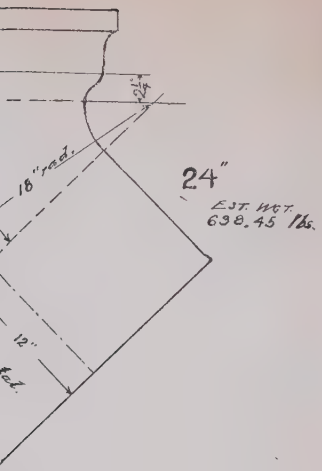

24"

EST. WGT.
638.45 lbs.

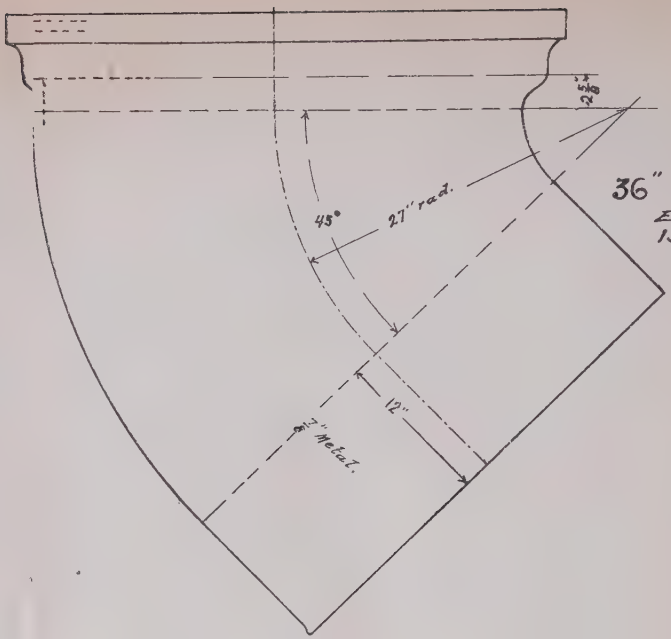

36"

EST. WGT.
1353.30 lbs

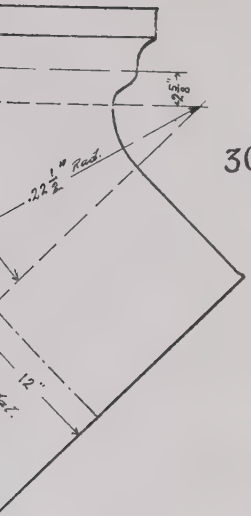

30"

EST. WGT.
1014.77 lbs.

HTH BENDS

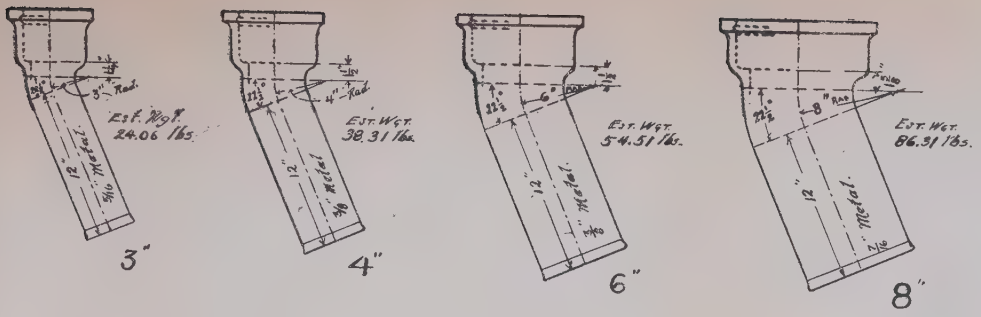

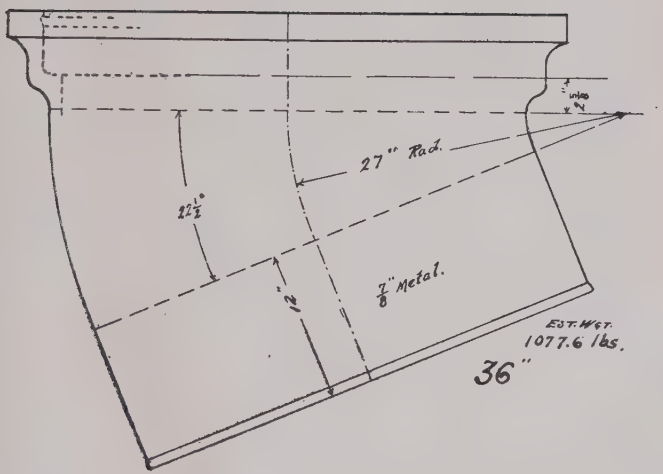

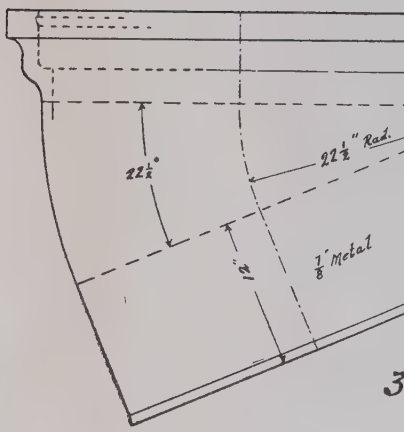

PROPOSED CAS

EST. WGT.
129.98 lbs.

10"

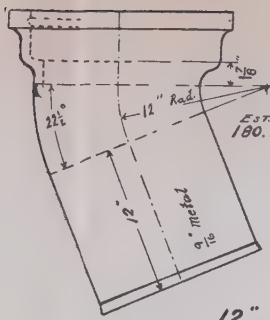

EST. WGT.
180.12 lbs.

12"

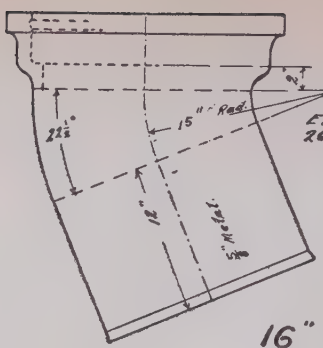

EST. WGT.
269.61 lbs.

16"

ST. WGT.
1.19 lbs

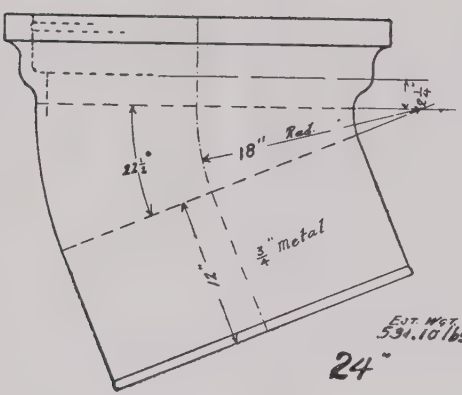

EST. WGT.
531.10 lbs

24"

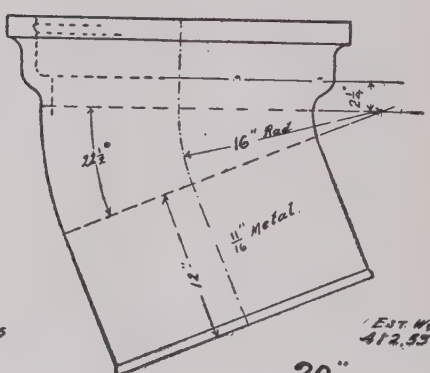

EST. WGT.
412.55 lbs.

20"

ON SIXTEENTH-BENDS.

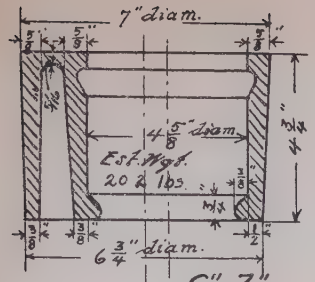

6"x3"

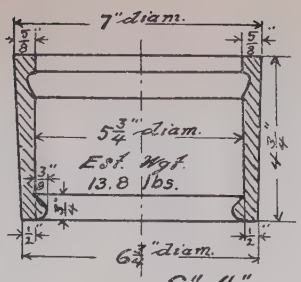

6"x4"

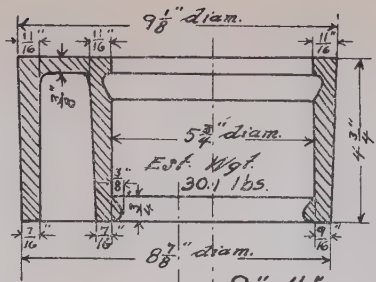

8"x4"

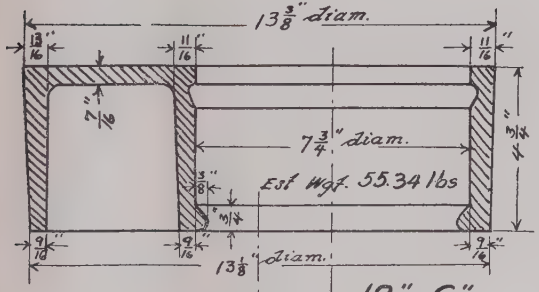

12"x6"

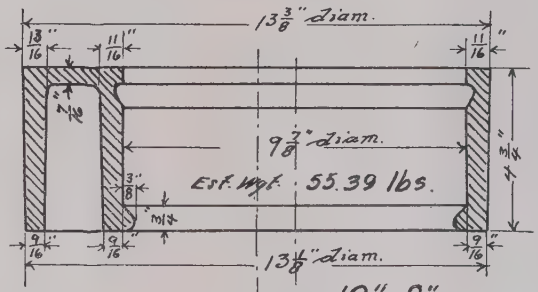

12"x8"

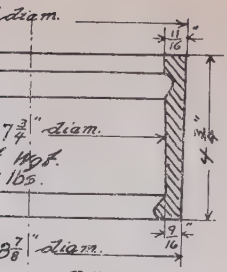

8"x6"

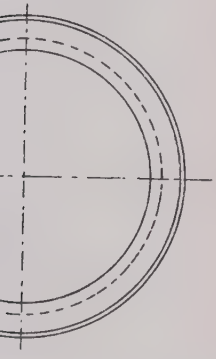

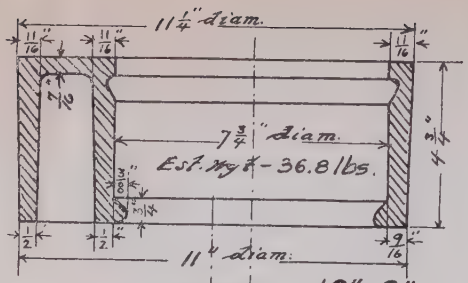

10"x6"

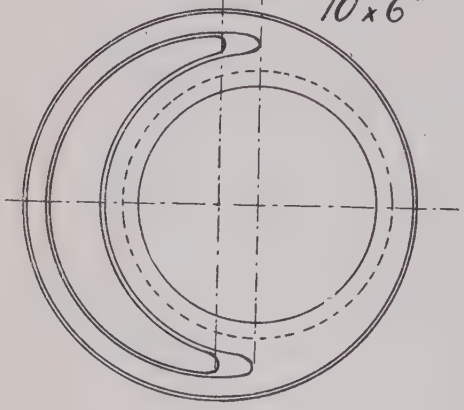

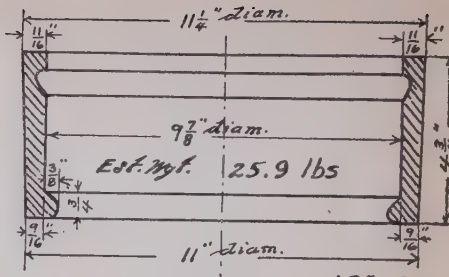

10"x8"

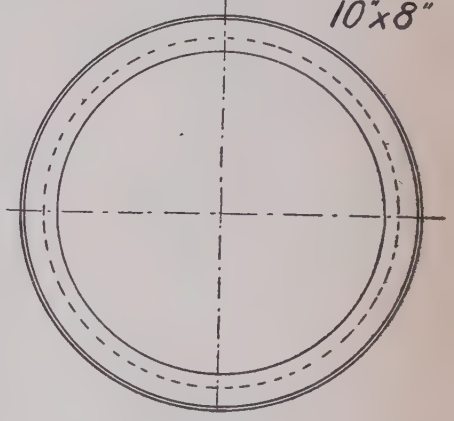

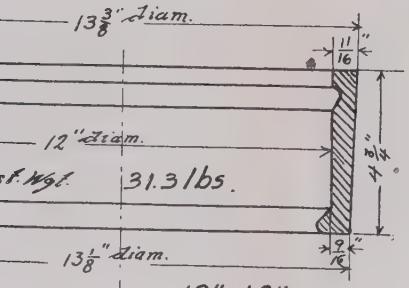

12"x10"

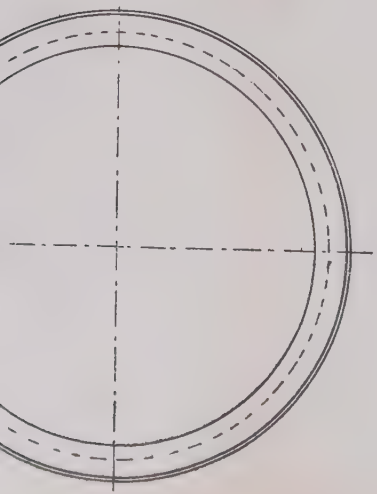

PROPOSED
CAST IRON BUSHINGS

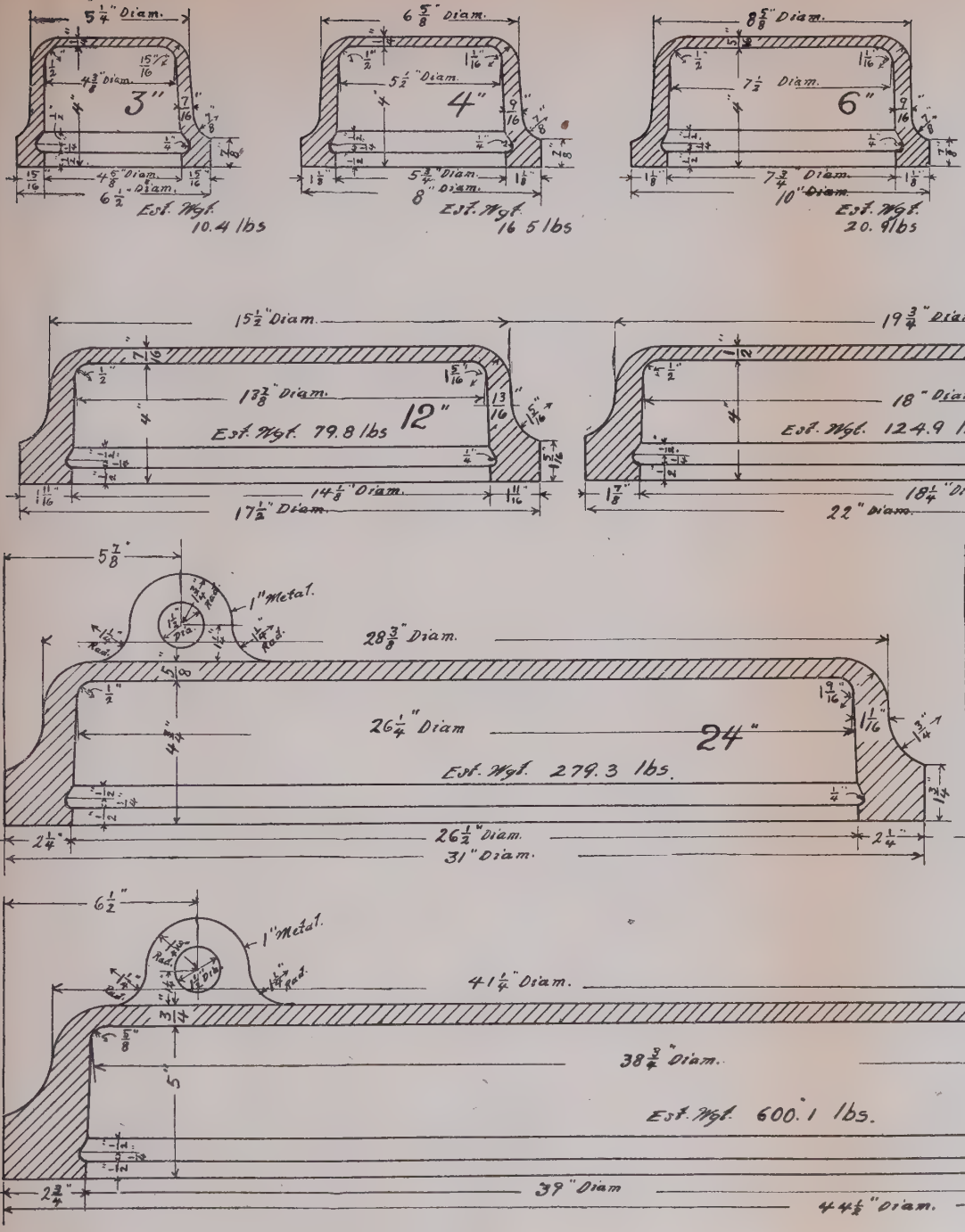

PROPOSED CAST-IRON

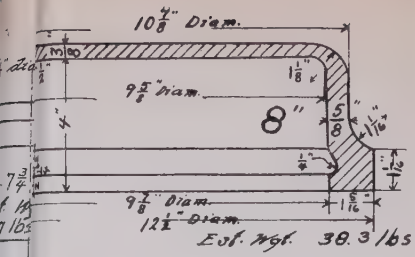
10 7/8" Diam.
9 5/8" Diam.
8"
9 7/8" Diam.
12 1/2" Diam.
Est. Wgt. 38.3 lbs

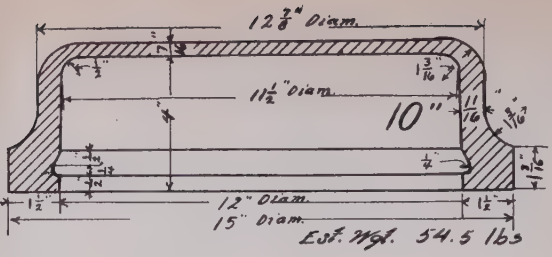
12 7/8" Diam.
11 1/2" Diam.
10"
12" Diam.
15" Diam.
Est. Wgt. 54.5 lbs

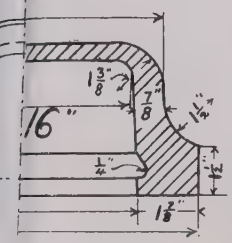
16"

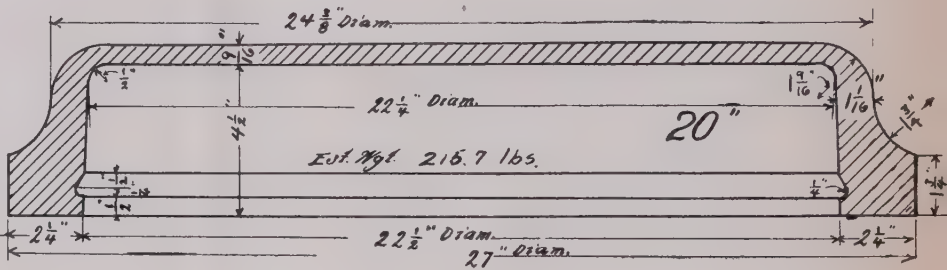
24 3/8" Diam.
22 1/4" Diam.
20"
Est. Wgt. 216.7 lbs.
22 1/2" Diam.
27" Diam.

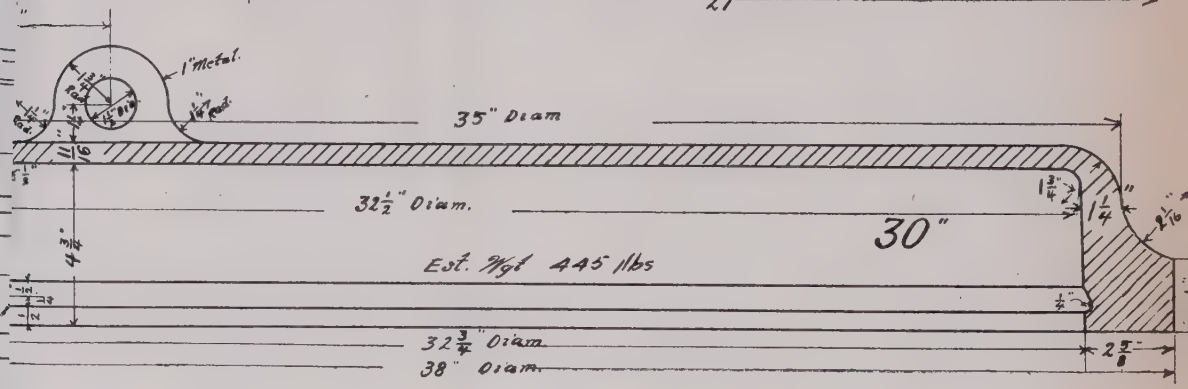
1" Metal.
35" Diam
32 1/2" Diam.
30"
Est. Wgt 445 lbs
32 3/4" Diam.
38" Diam.

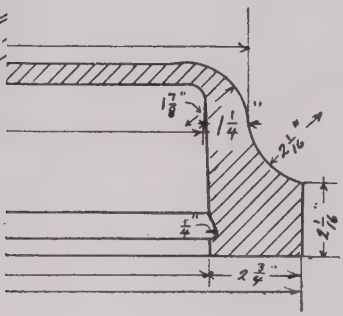

PS.

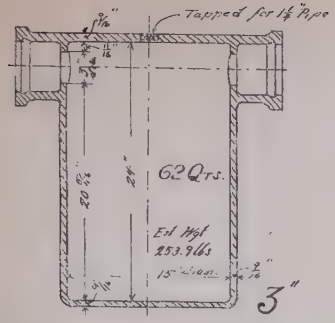

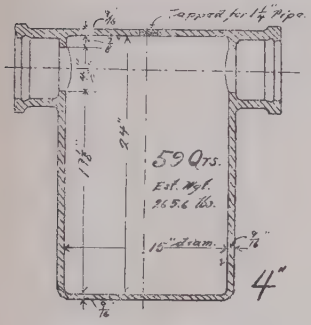

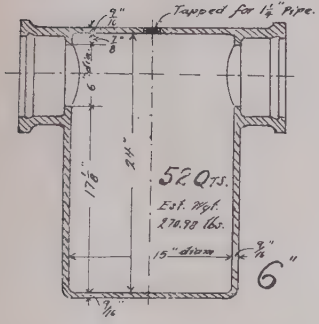

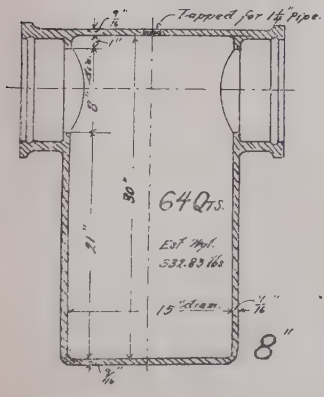

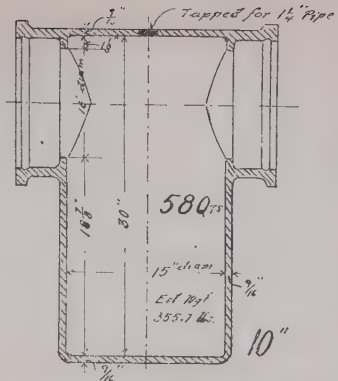

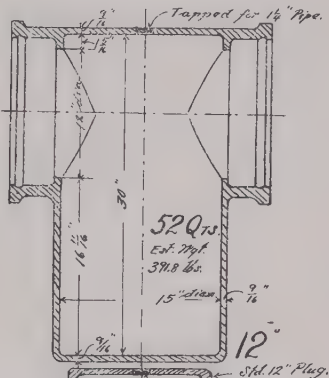

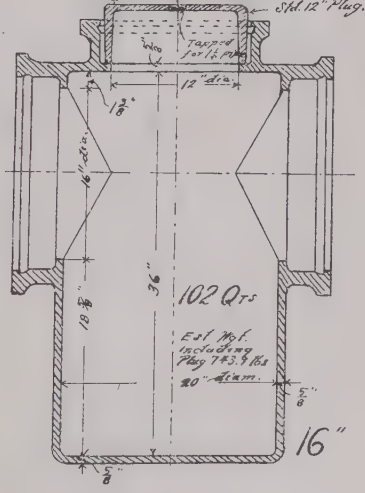

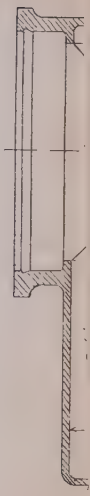

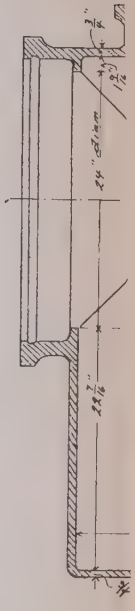

PROPOSED CAST I

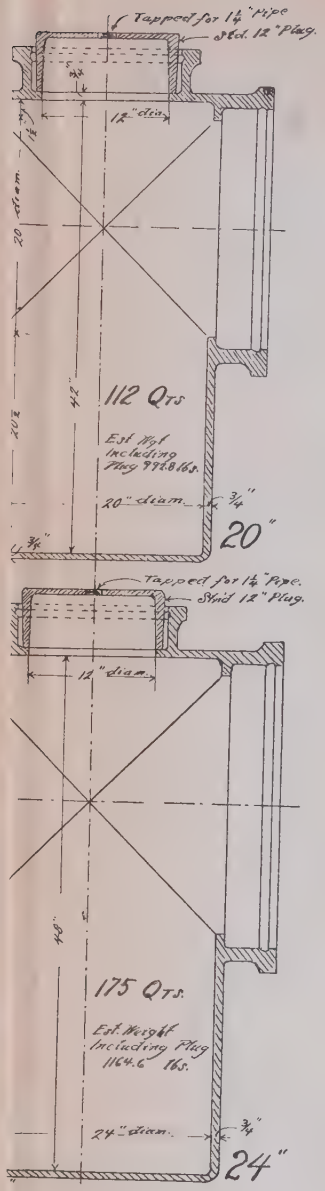

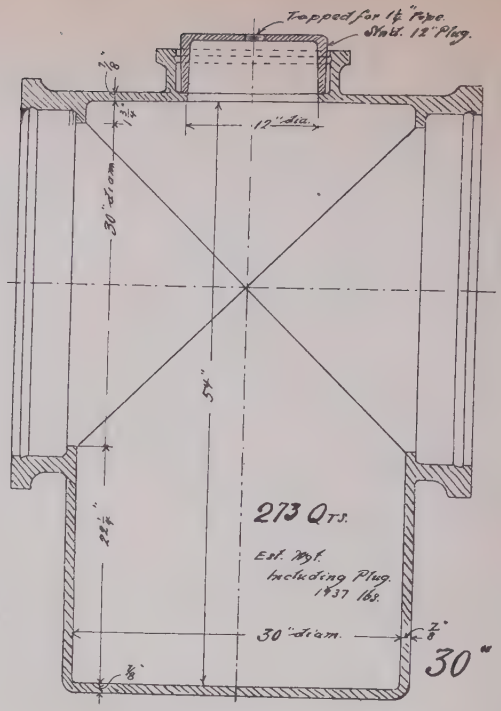

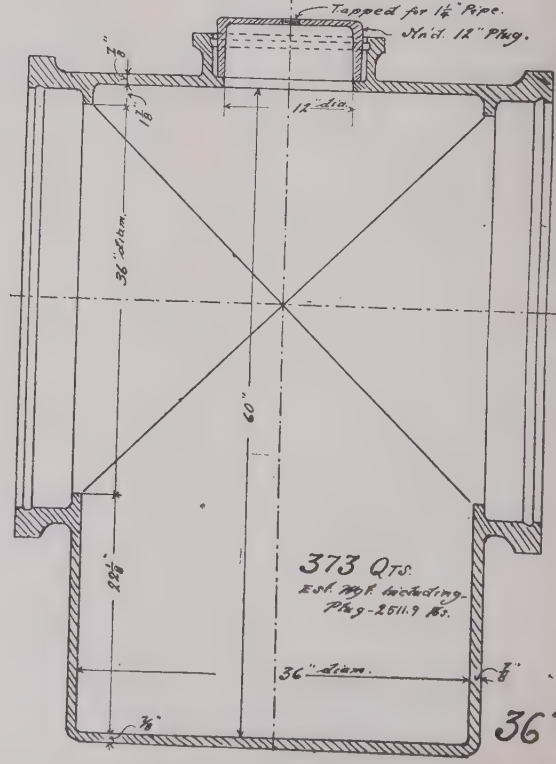

IRON LINE DRIP-POTS.

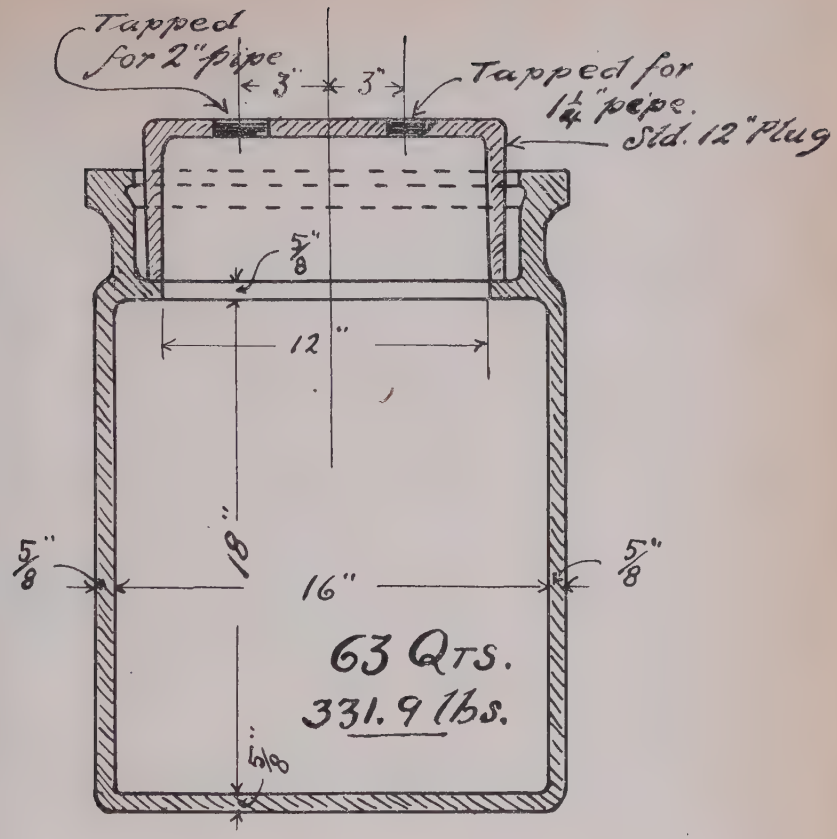

For 3 inch To 8 inch.

PR

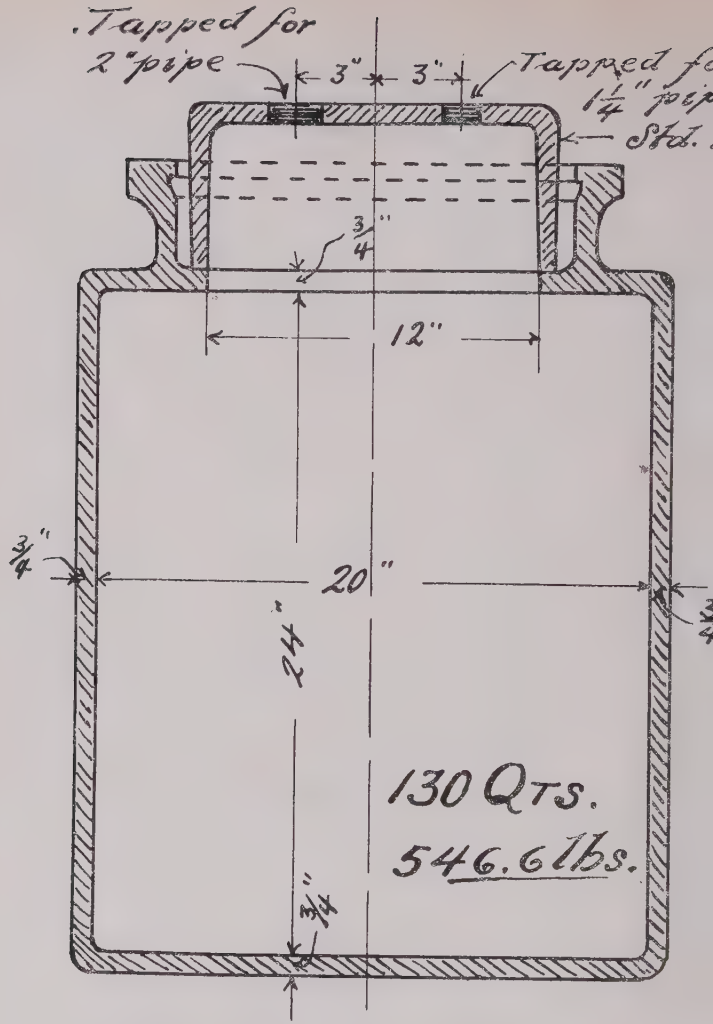

For 10 inch To 20 inch.

OPOSED CAST-IRON SIDE PO

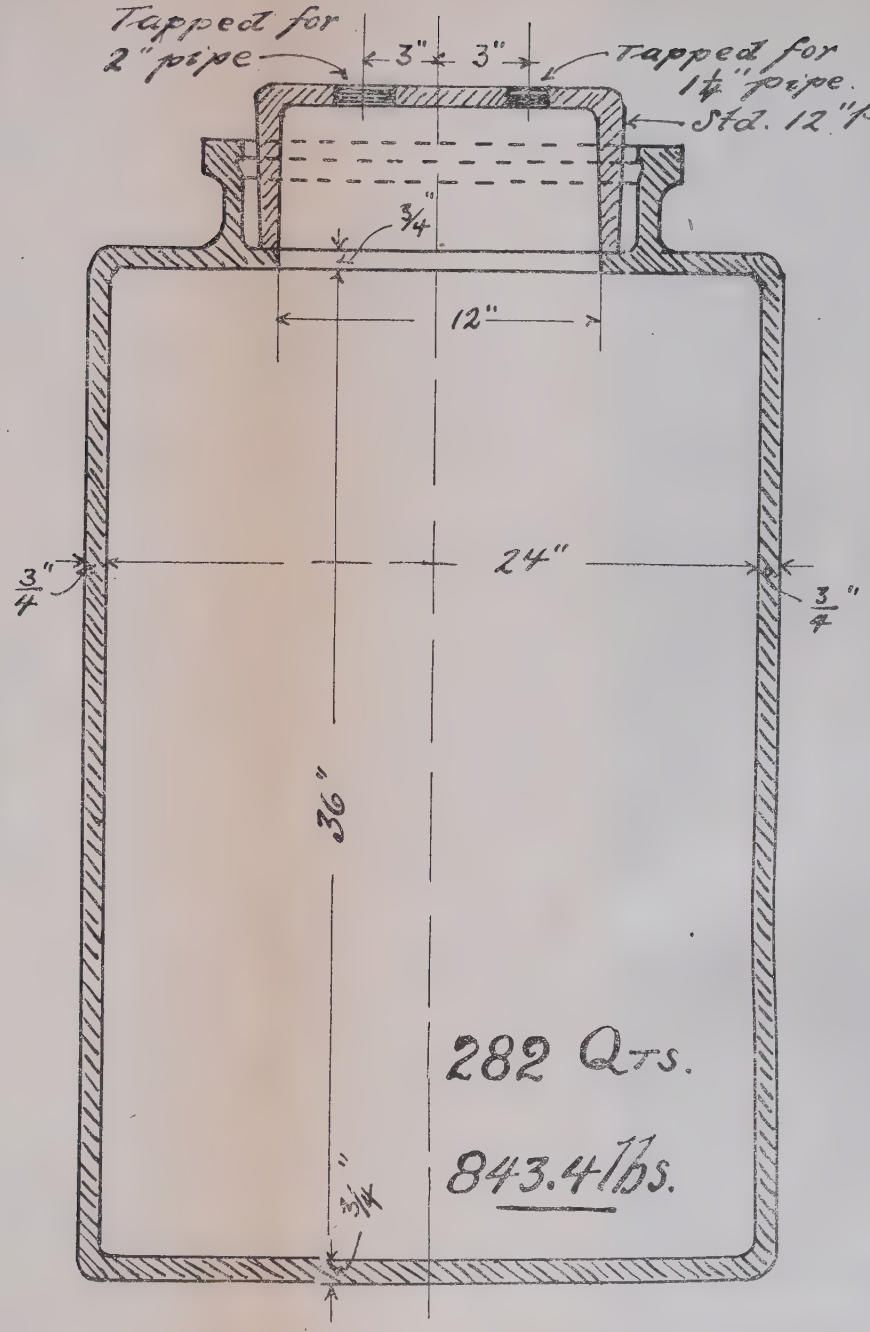

For 24 inch to 36 inch.

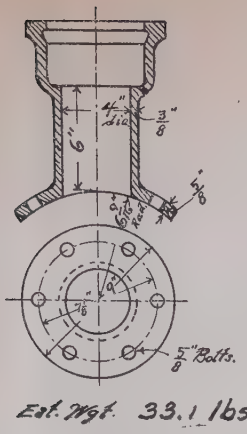

Est. Wgt. 33.1 lbs.

12"x4"

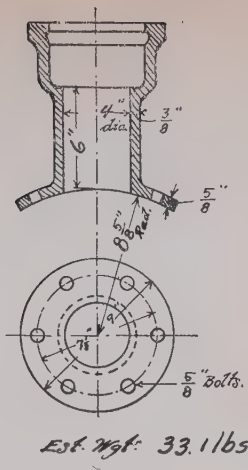

Est. Wgt. 33.1 lbs.

16"x4"

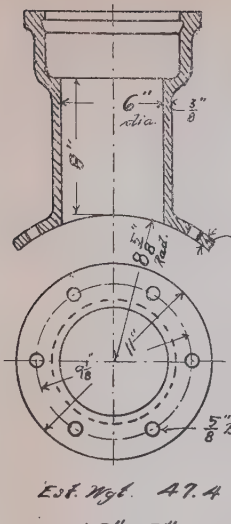

Est. Wgt. 47.4 lbs.

16"x6"

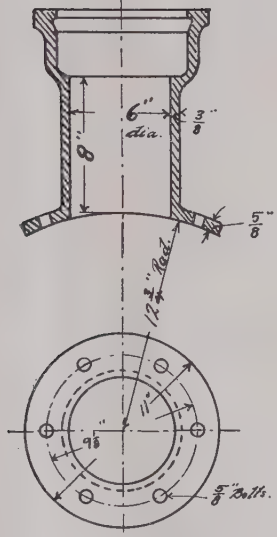

Est. Wgt. 47.4 lbs

24"x6"

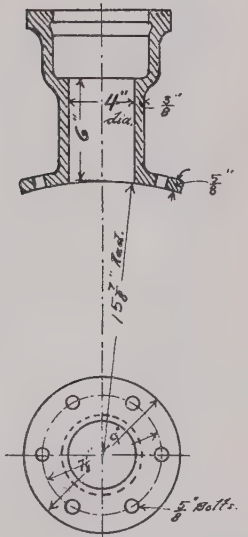

Est. Wgt. 33.1 lbs.

30"x4"

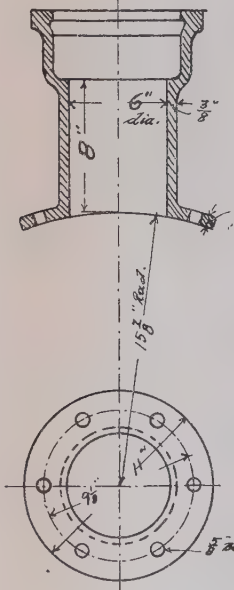

Est. Wgt. 47.4 l

30"x6"

PROPOSED CA

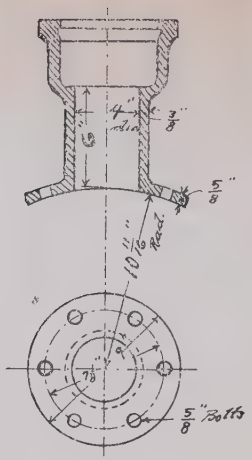

Est. Wgt. 33.1 lbs

20" x 4"

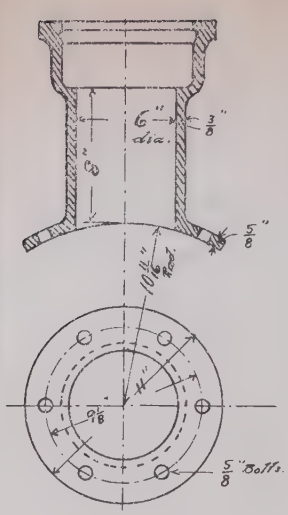

Est. Wgt. 47.4 lbs

20"x6"

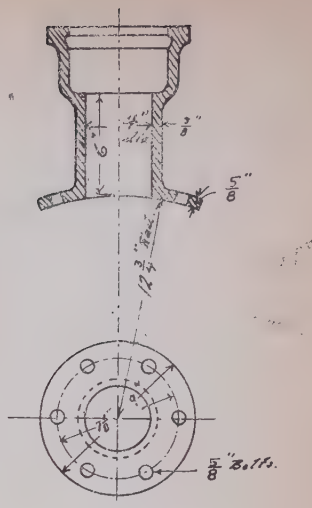

Est. Wgt. 33.1 lbs.

24"x4"

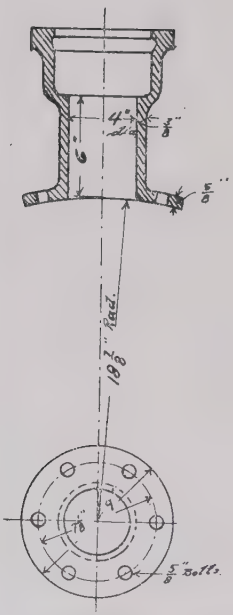

Est. Wgt. 33.1 lbs.

36"x4"

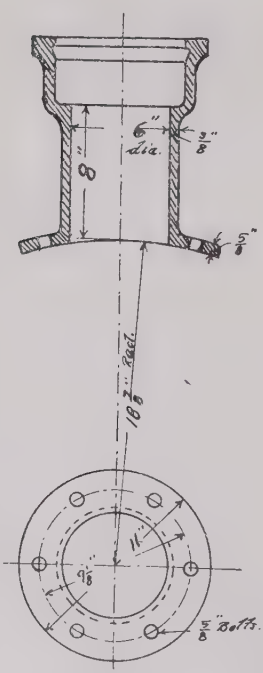

Est. Wgt. 47.4 lbs

36"x6"

IRON HAT-FLANGES.

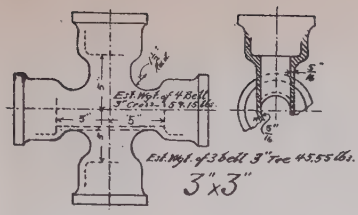

3"x3"

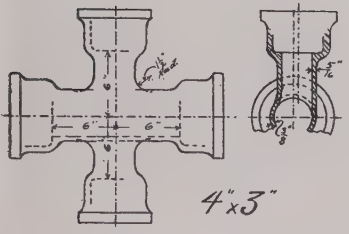

4"x3"

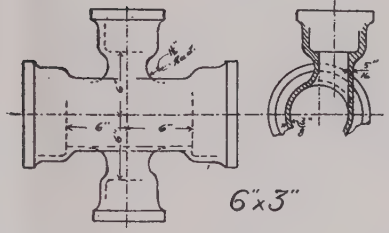

6"x3"

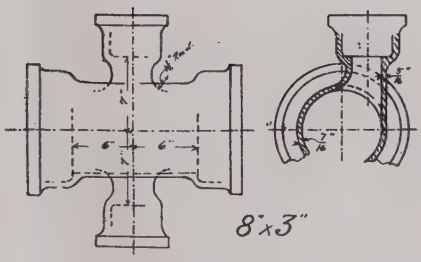

8"x3"

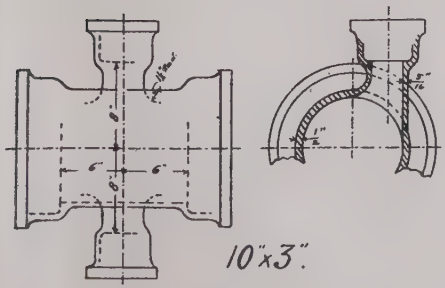

10"x3"

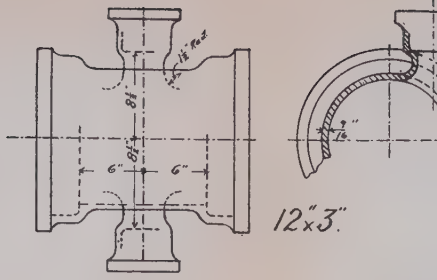

12"x3"

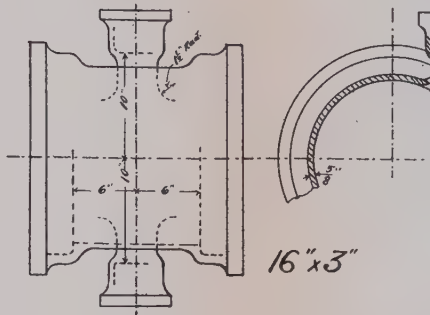

16"x3"

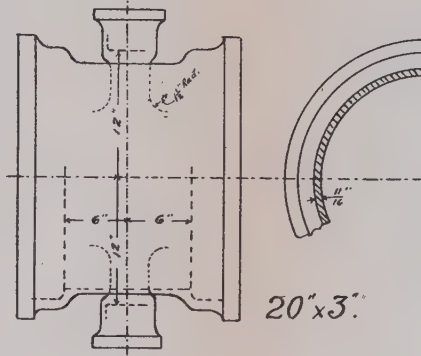

20"x3"

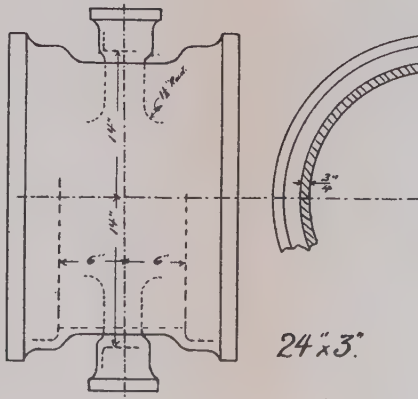

24"x3"

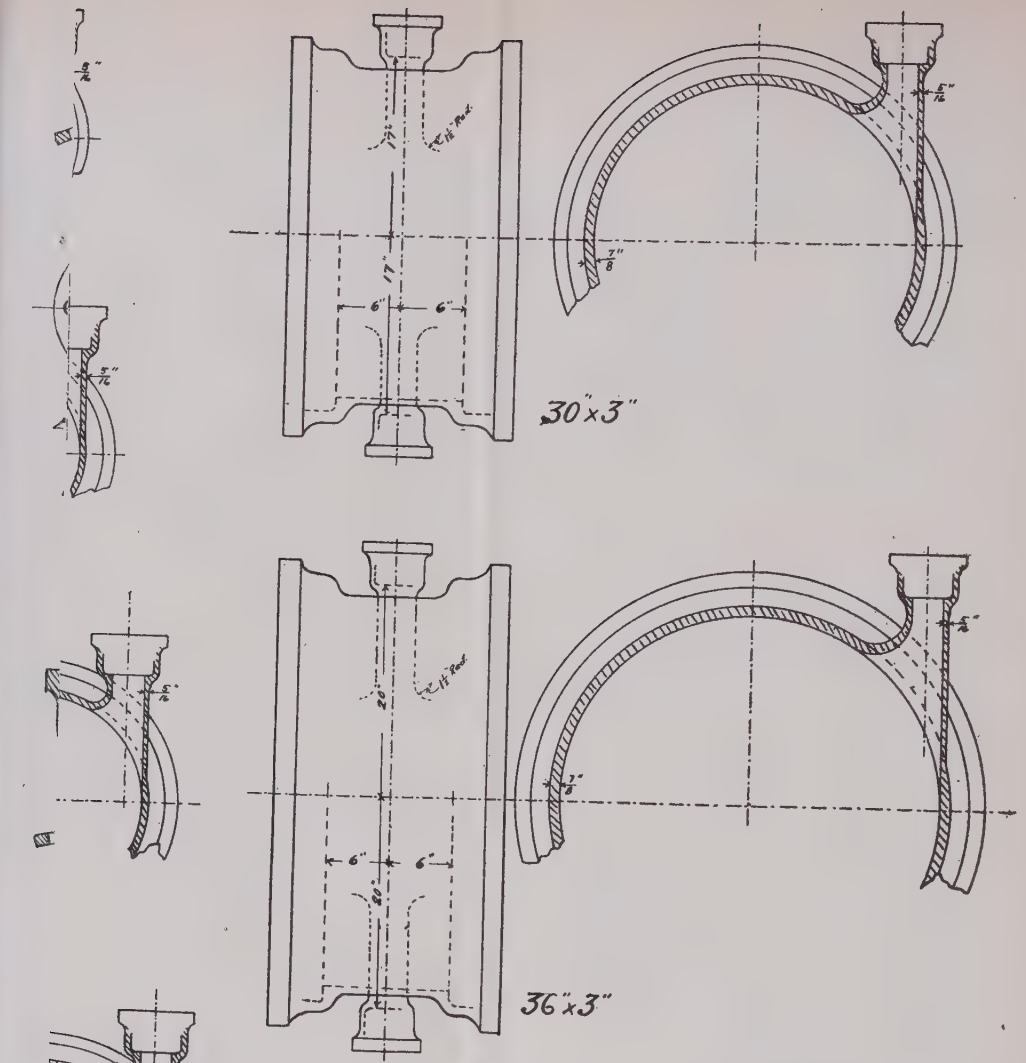

PROPOSED CAST-IRON CROSSES & TEES
WITH THREE INCH OUTLETS.

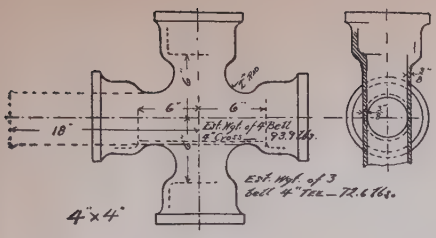

4"×4"

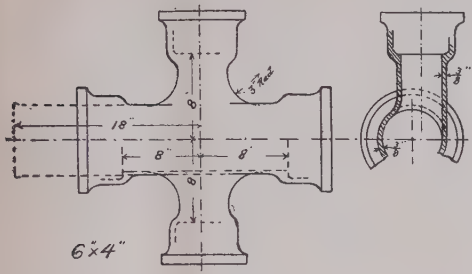

6"×4"

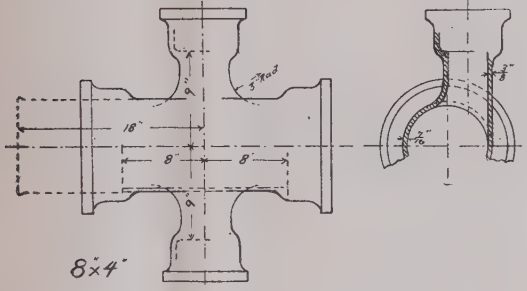

8"×4"

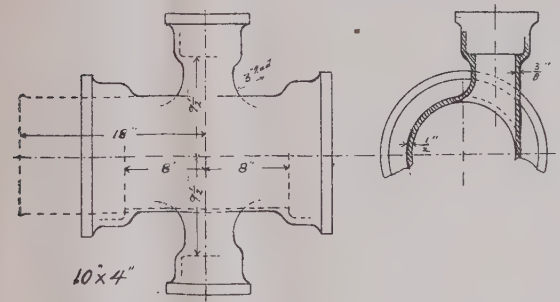

10"×4"

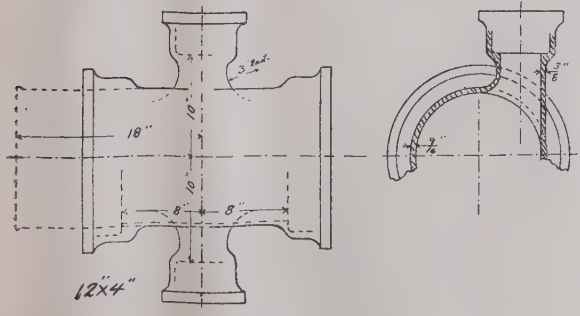

12"×4"

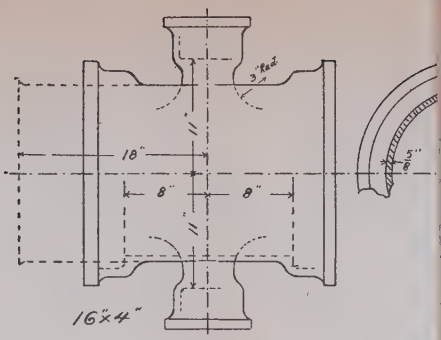

16"×4"

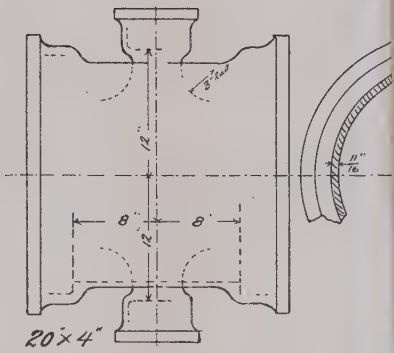

20"×4"

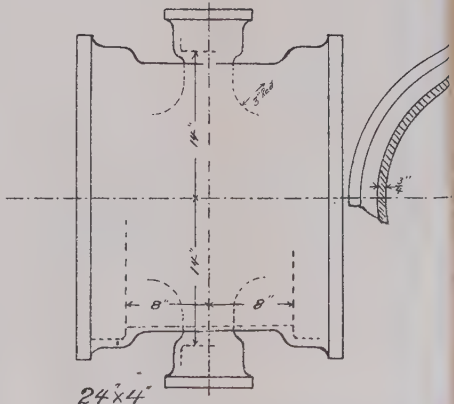

24"×4"

PROPOSED CAST-
WI

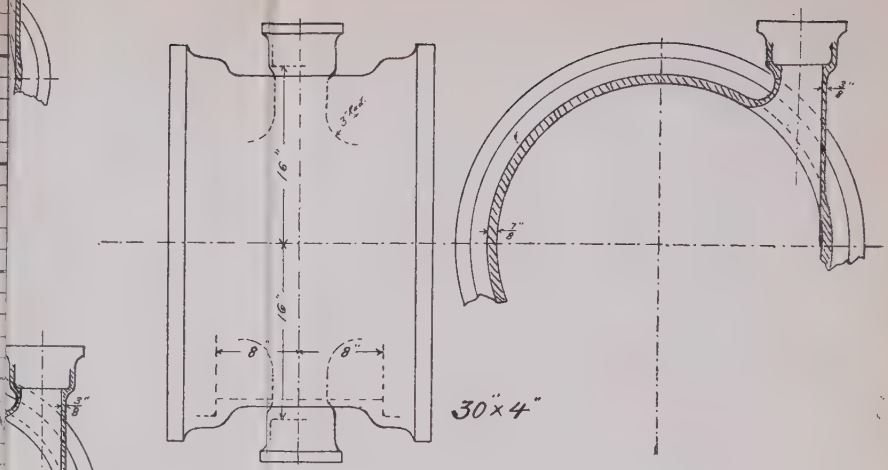

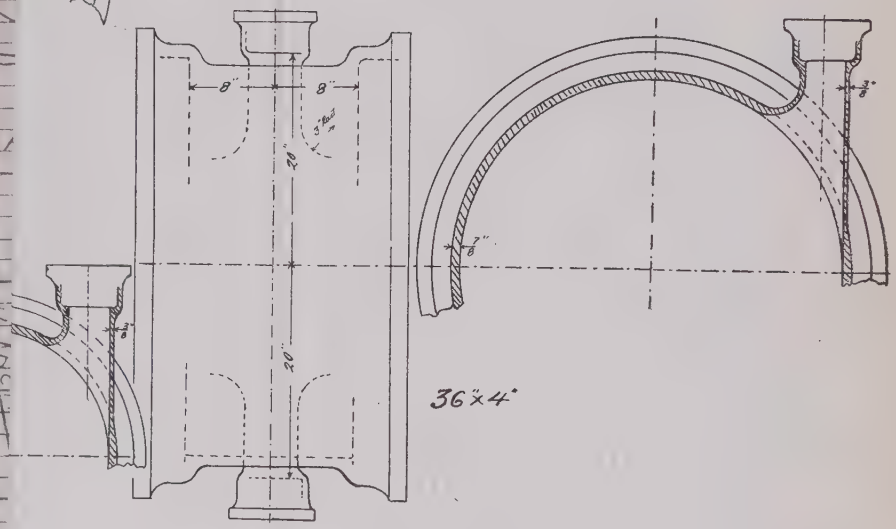

CROSSES & TEES
UR INCH OUTLETS.

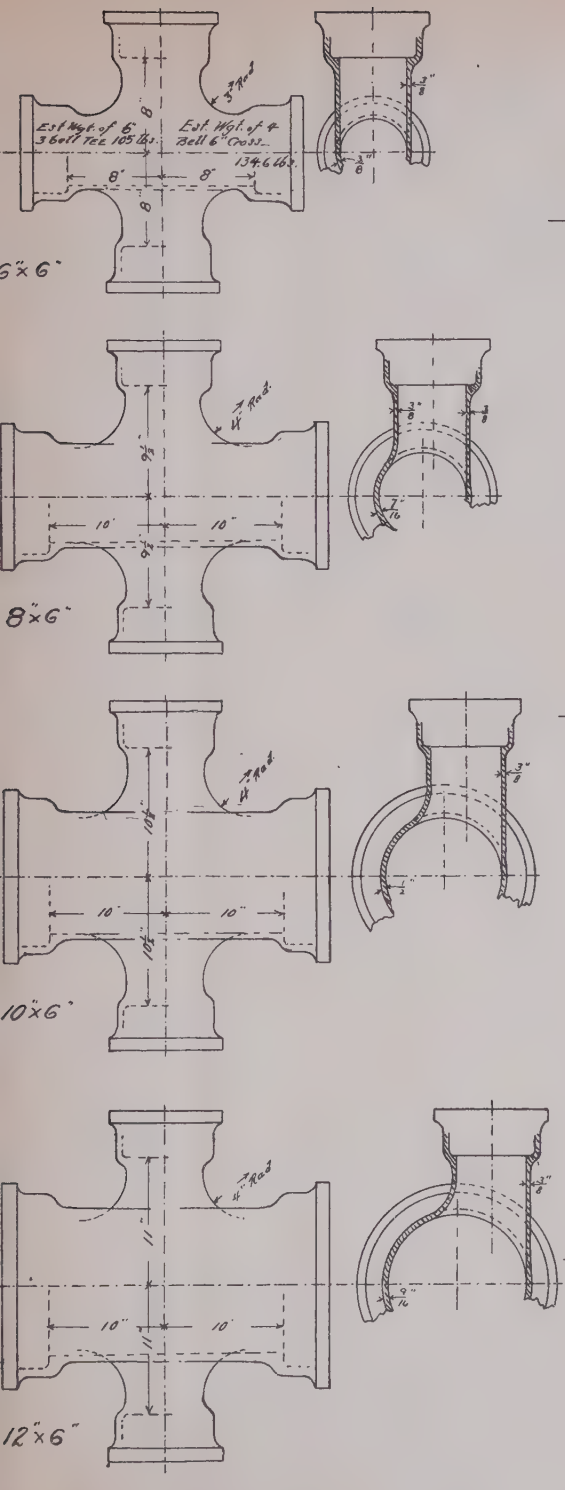
Est Wgt. of 6" 3 bell Tee 105 lbs.
Est. Wgt. of 4" Bell 6" Cross 134 lbs.
6"x6"
8"x6"
10"x6"
12"x6"
16"x6"
20"x6"
24"x6"
PRO
OSL & T

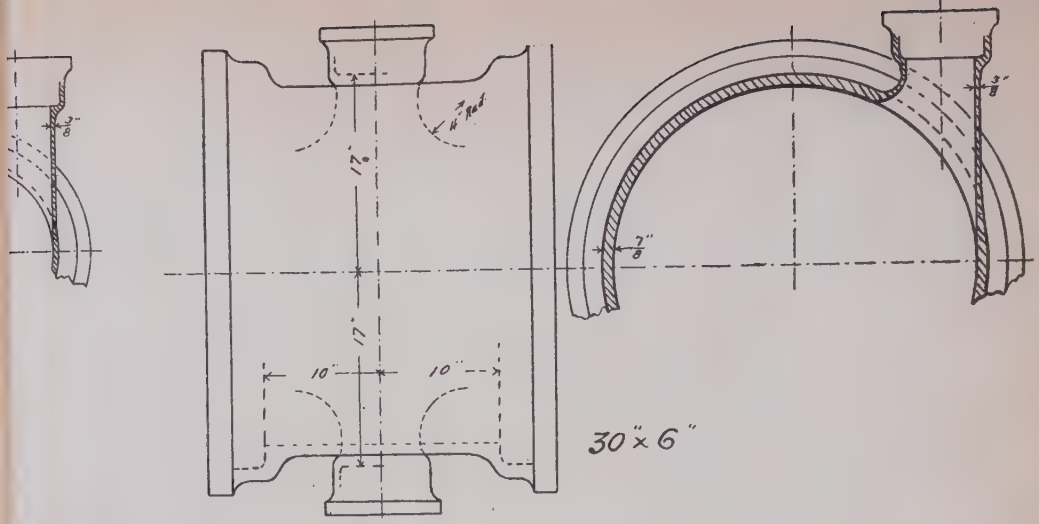

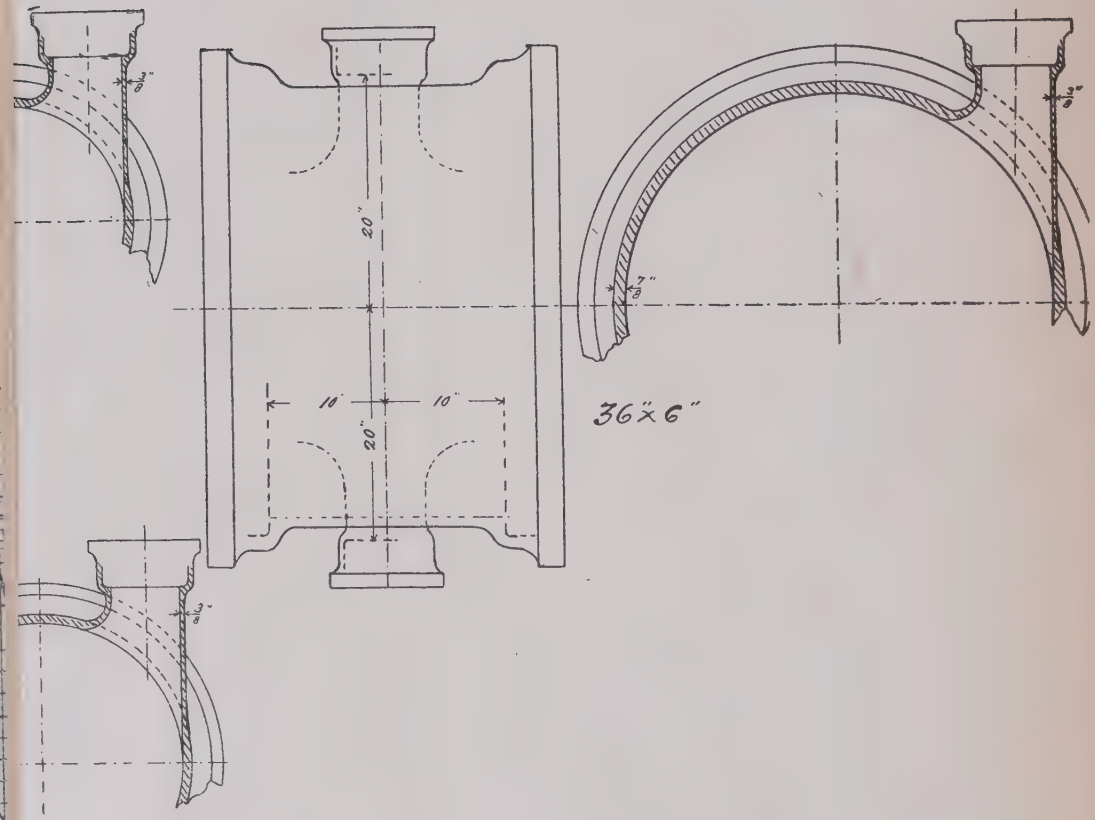

POSED CAST-IRON CROSSES & TEES
WITH SIX INCH OUTLETS.

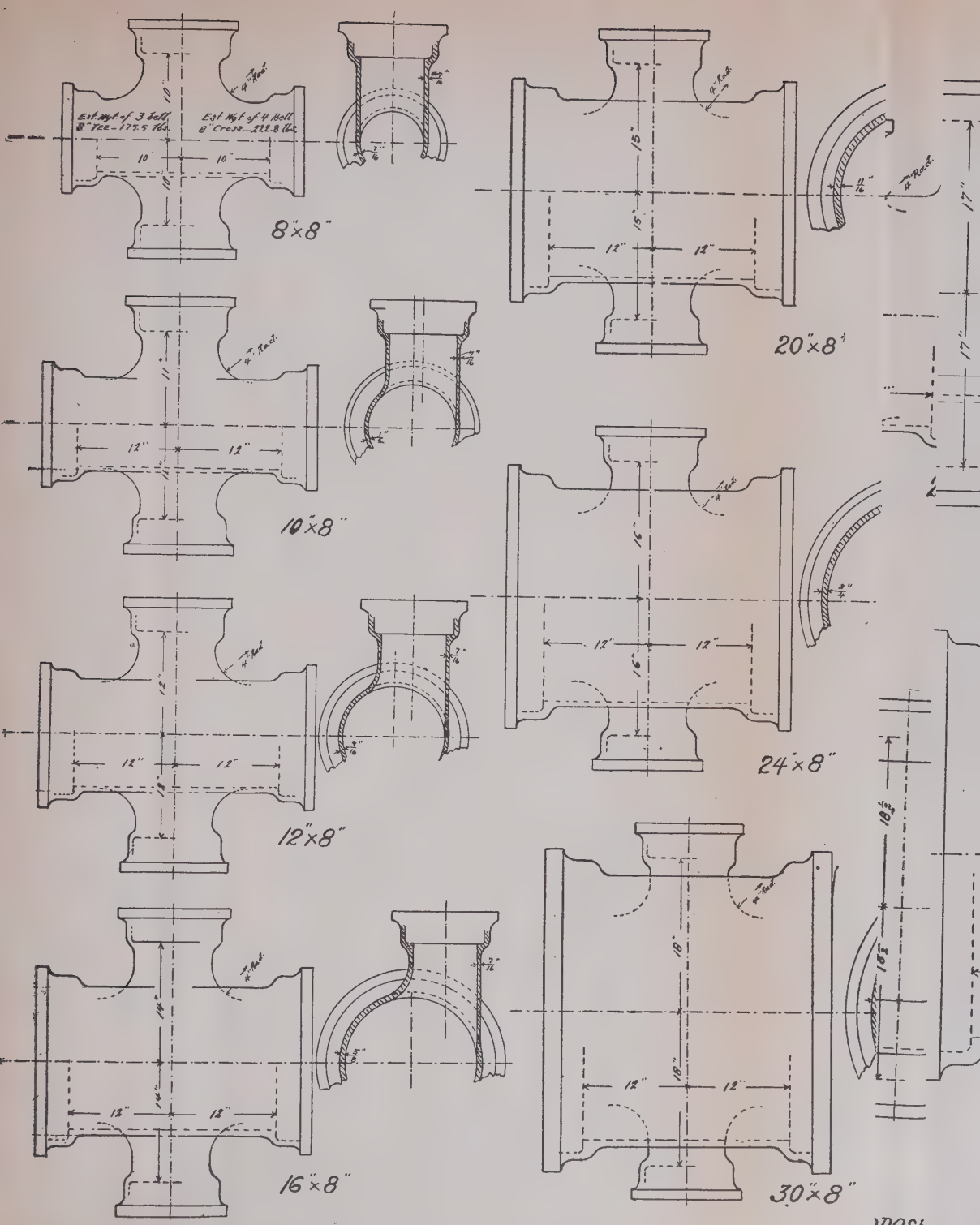
Est. Wgt. of 3 Bolt 8" Tee - 175.5 lbs.
Est. Wgt. of 4 Bolt 8" Cross - 222.8 lbs.
8"x8"
10"x8"
12"x8"
16"x8"
20"x8"
24"x8"
30"x8"

POST & TE

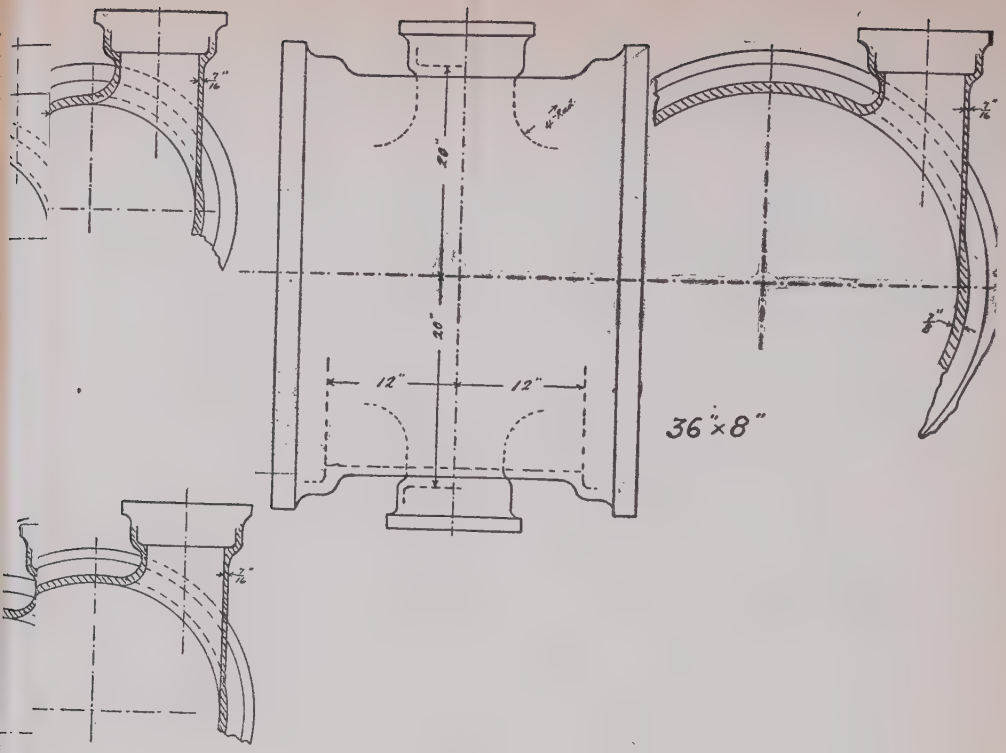

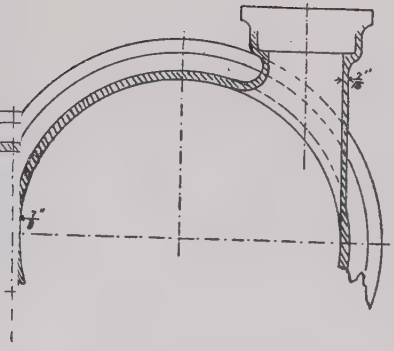

PROPOSED CAST-IRON CROSSES & TEES
WITH EIGHT INCH OUTLETS.

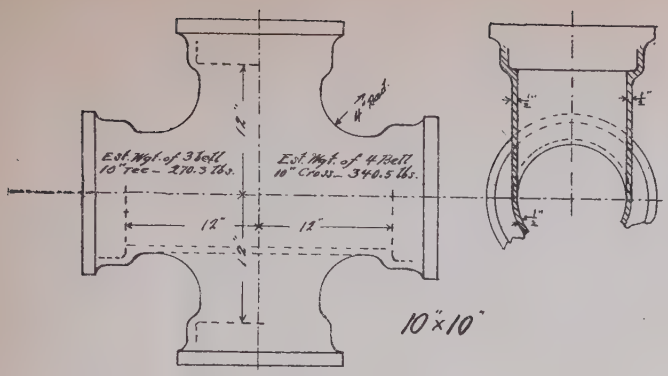

10"×10"

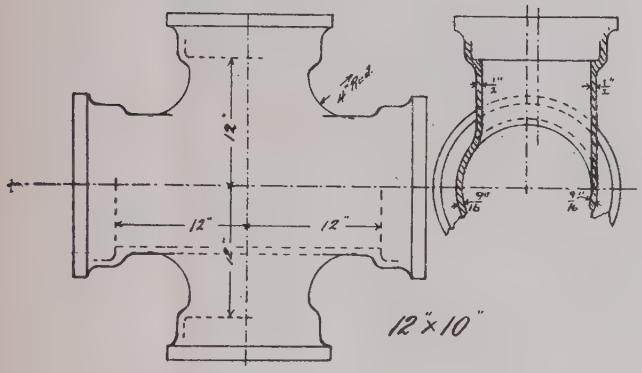

12"×10"

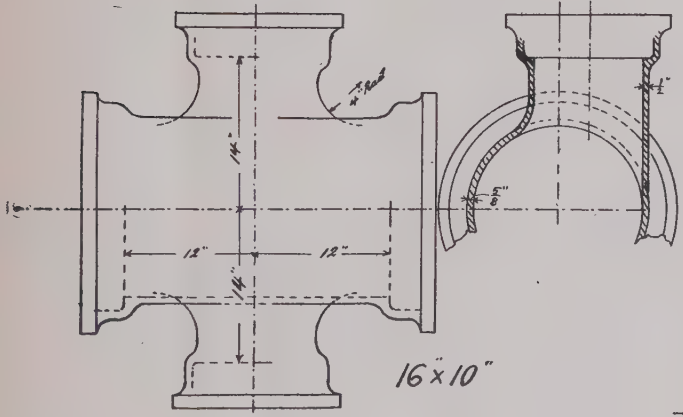

16"×10"

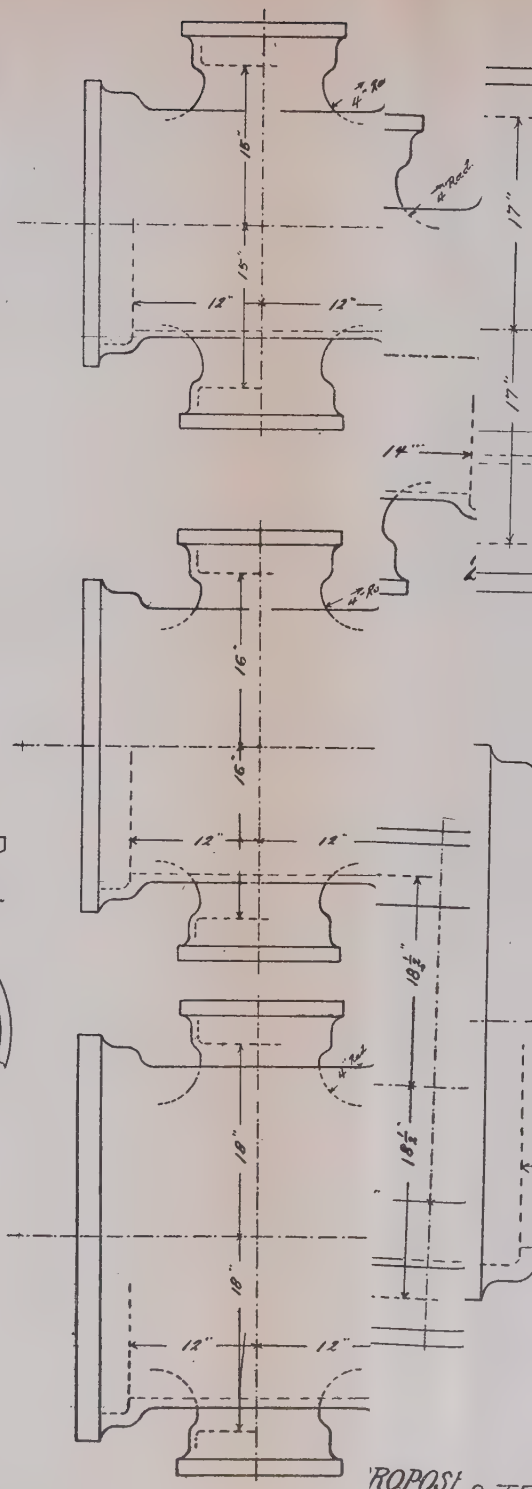

PROPOSE & TE

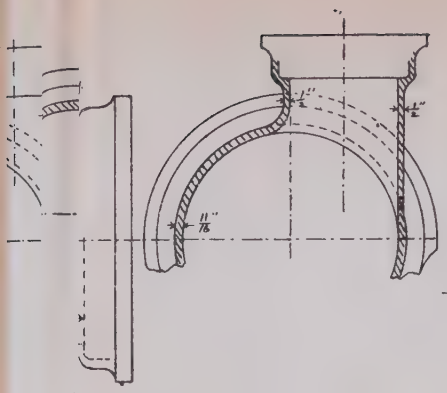

20"×10"

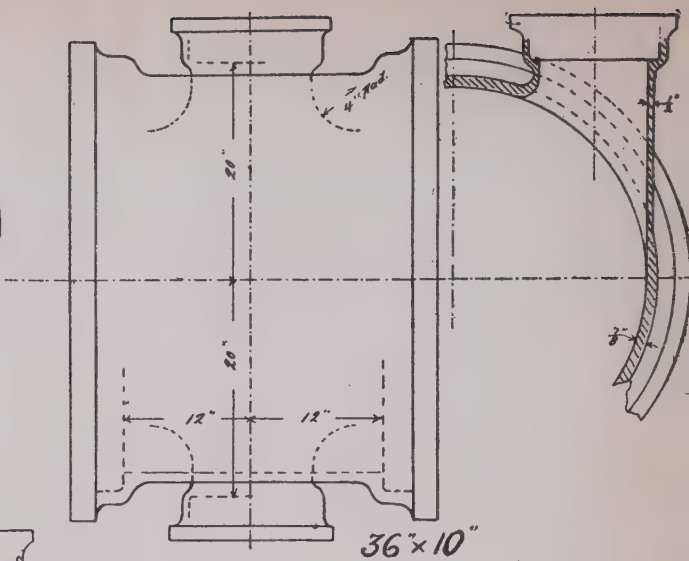

36"×10"

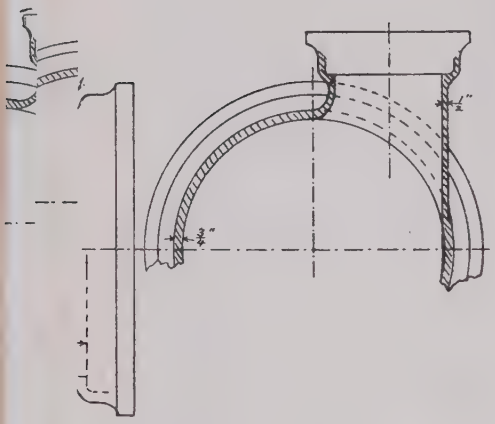

24"×10"

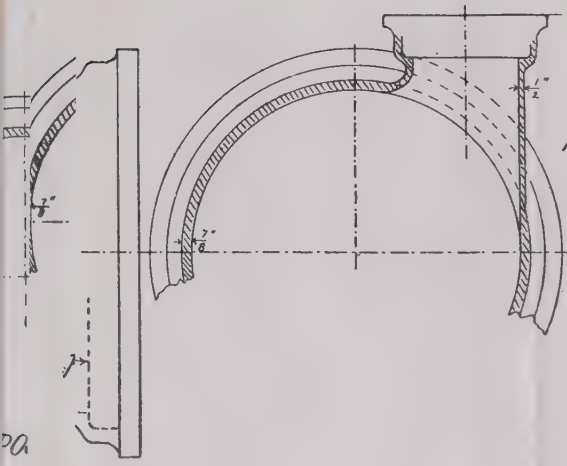

30"×10"

PROPOSED CAST-IRON CROSSES & TEES WITH TEN INCH OUTLETS.

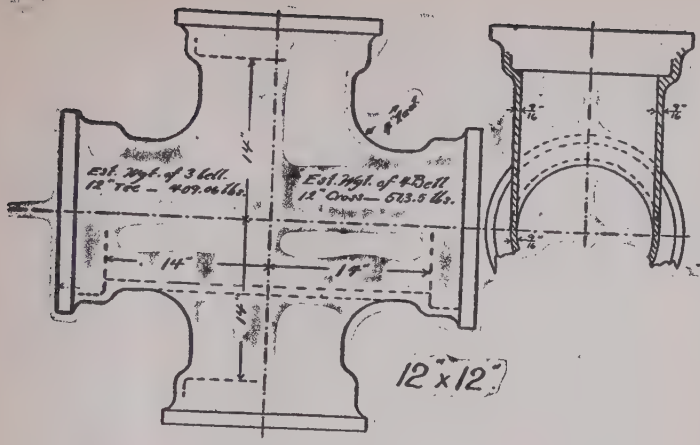
Est. Wgt. of 3 Bell
12" Tee — 409.0 Lbs.
Est. Wgt. of 4 Bell
12" Cross — 573.5 Lbs.
14"
14"
14"
14"
12" x 12"

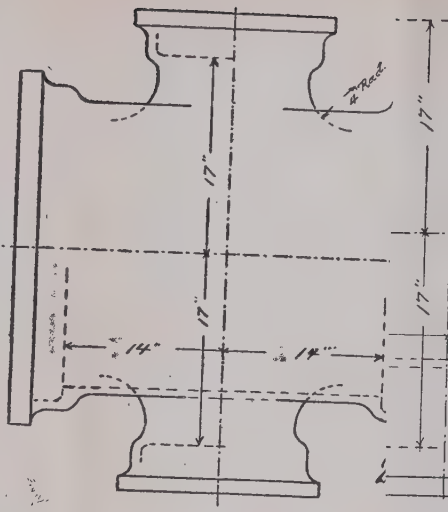
17"
17"
14"
14"

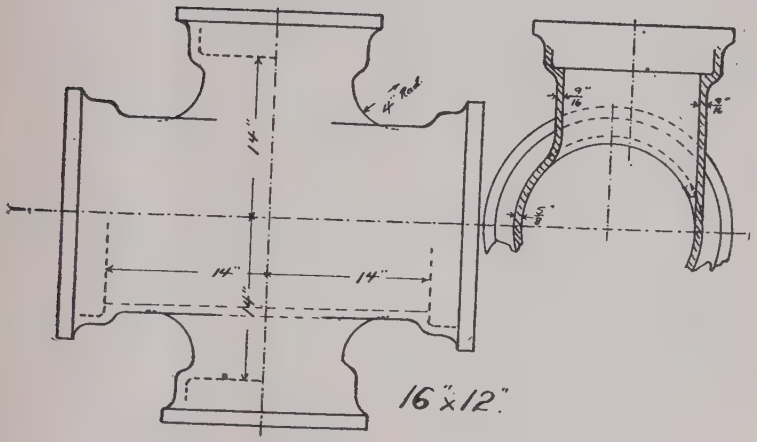
14"
14"
14"
16" x 12"

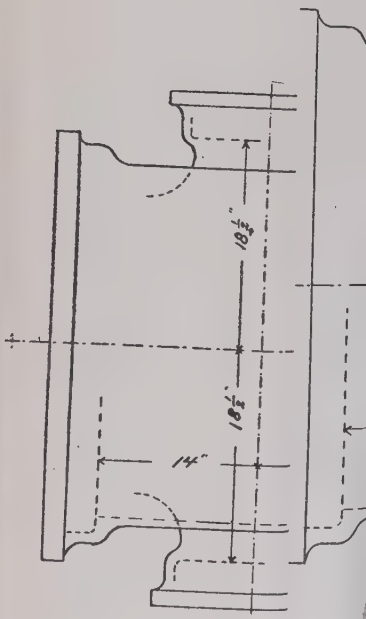
14"

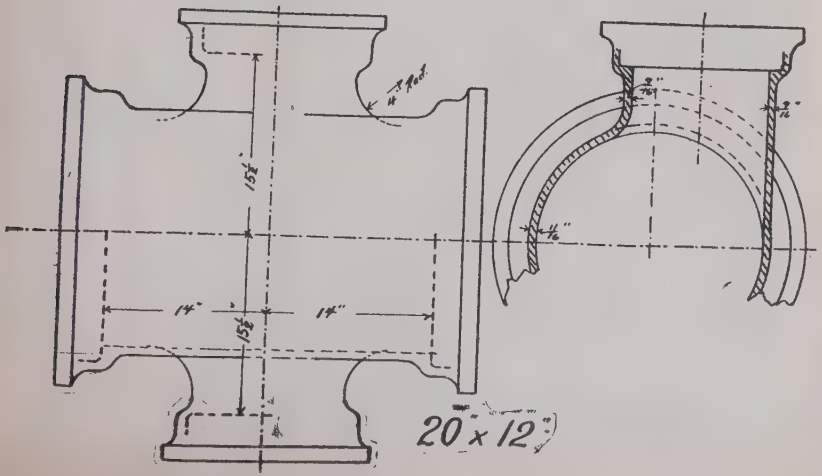
15½"
14"
14"
15½"
20" x 12"

PROPOSL & TEE

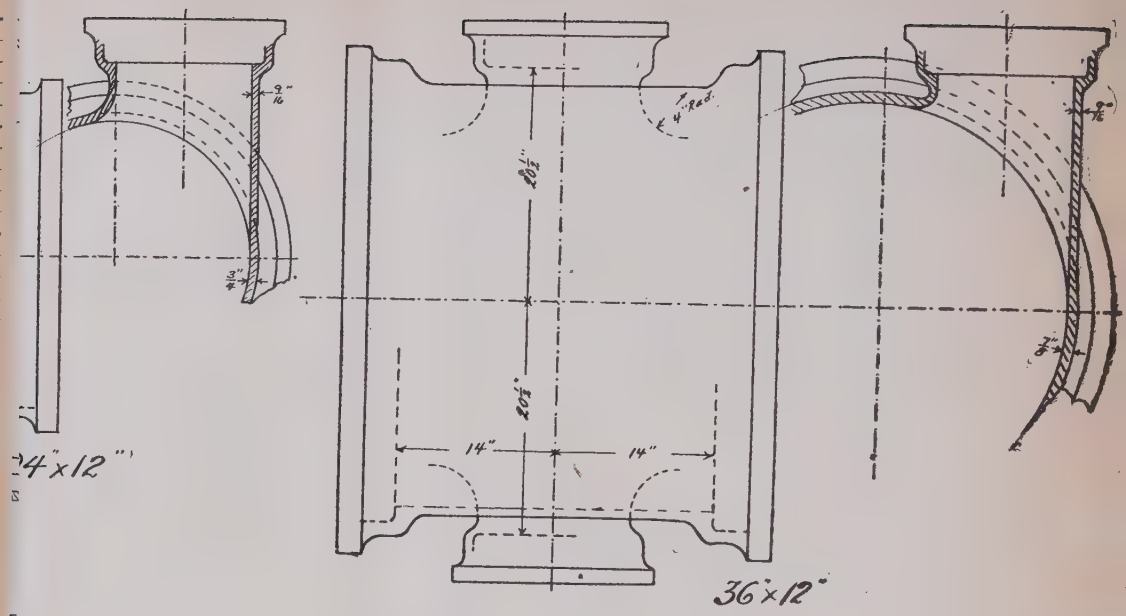

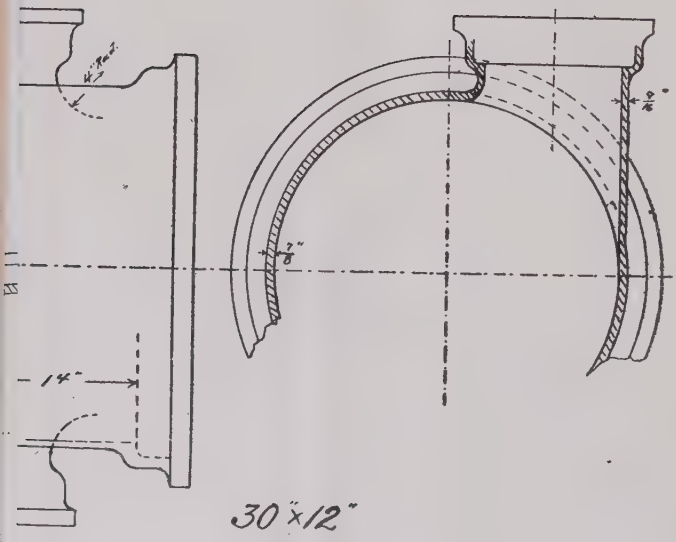

D CAST-IRON CROSSES & TEES
WITH TWELVE INCH OUTLETS.

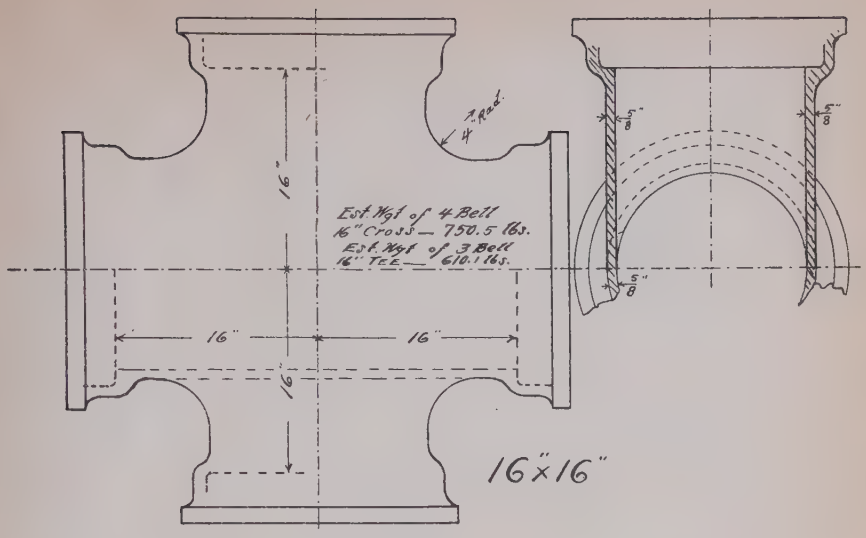

16"×16"

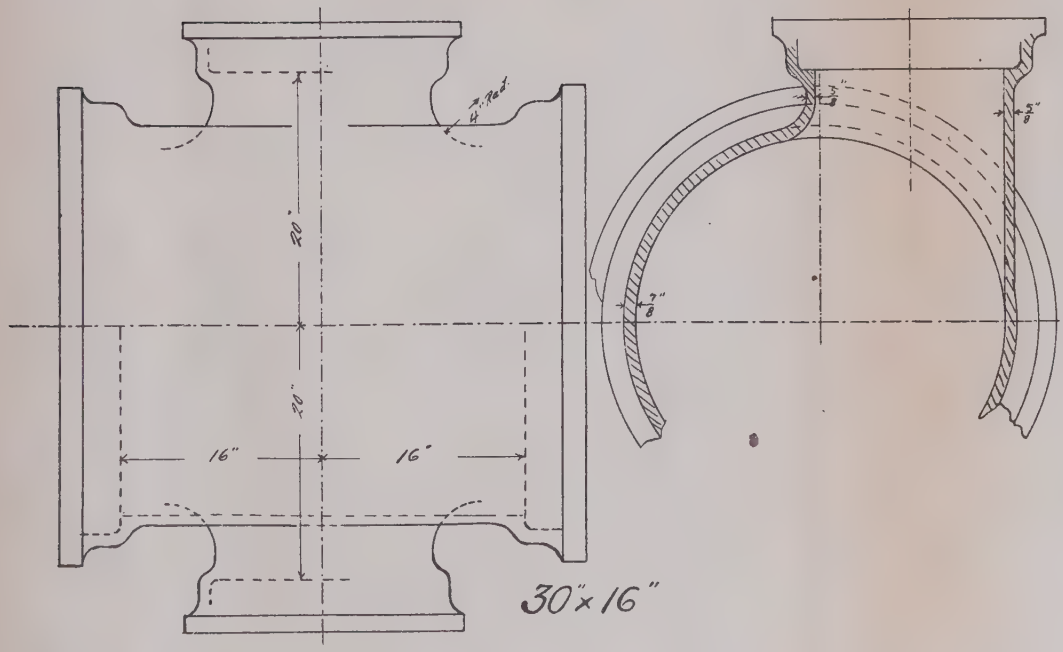

30"×16"

PROPOSED CAST-IRON CROSSES & TE

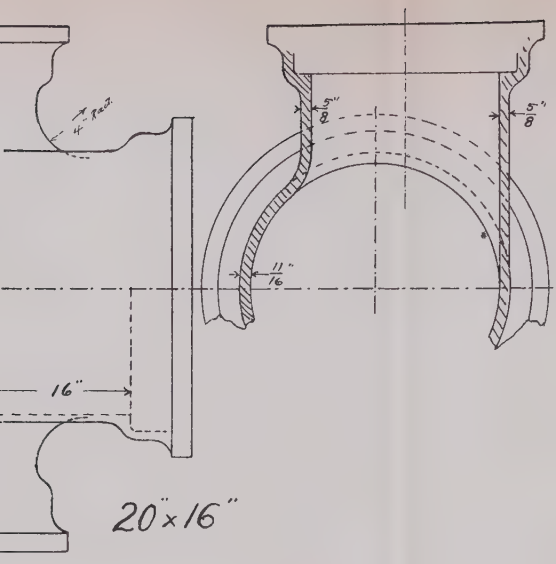

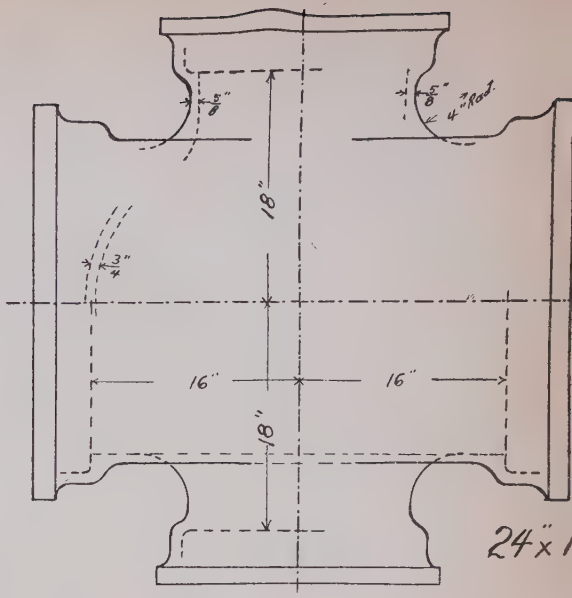

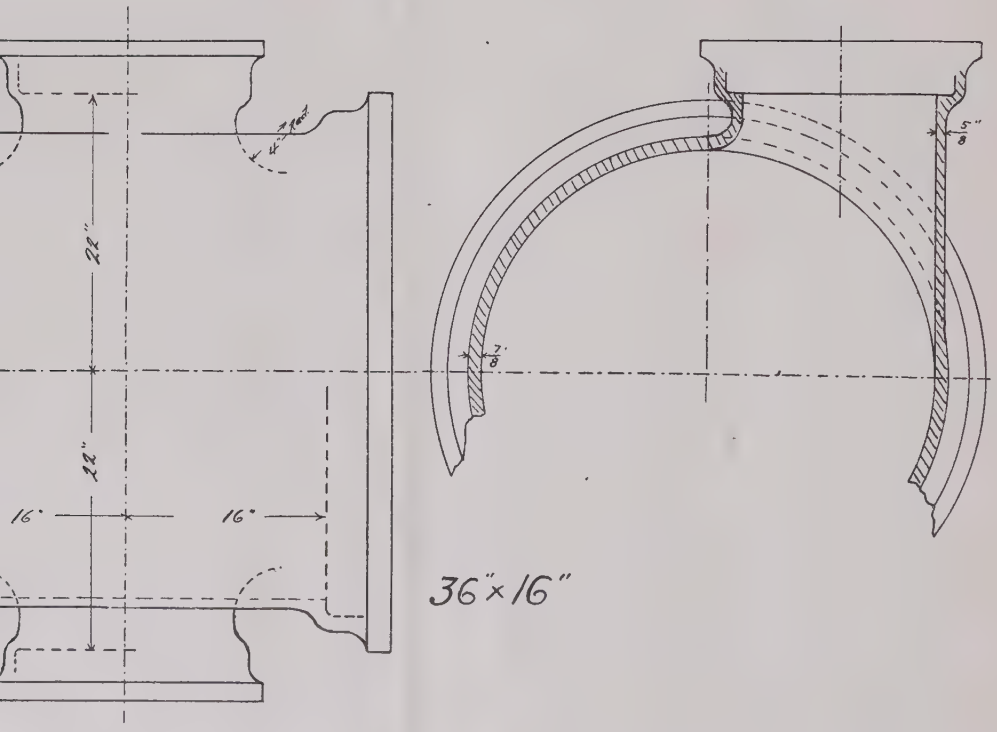

WITH SIXTEEN INCH OUTLETS.

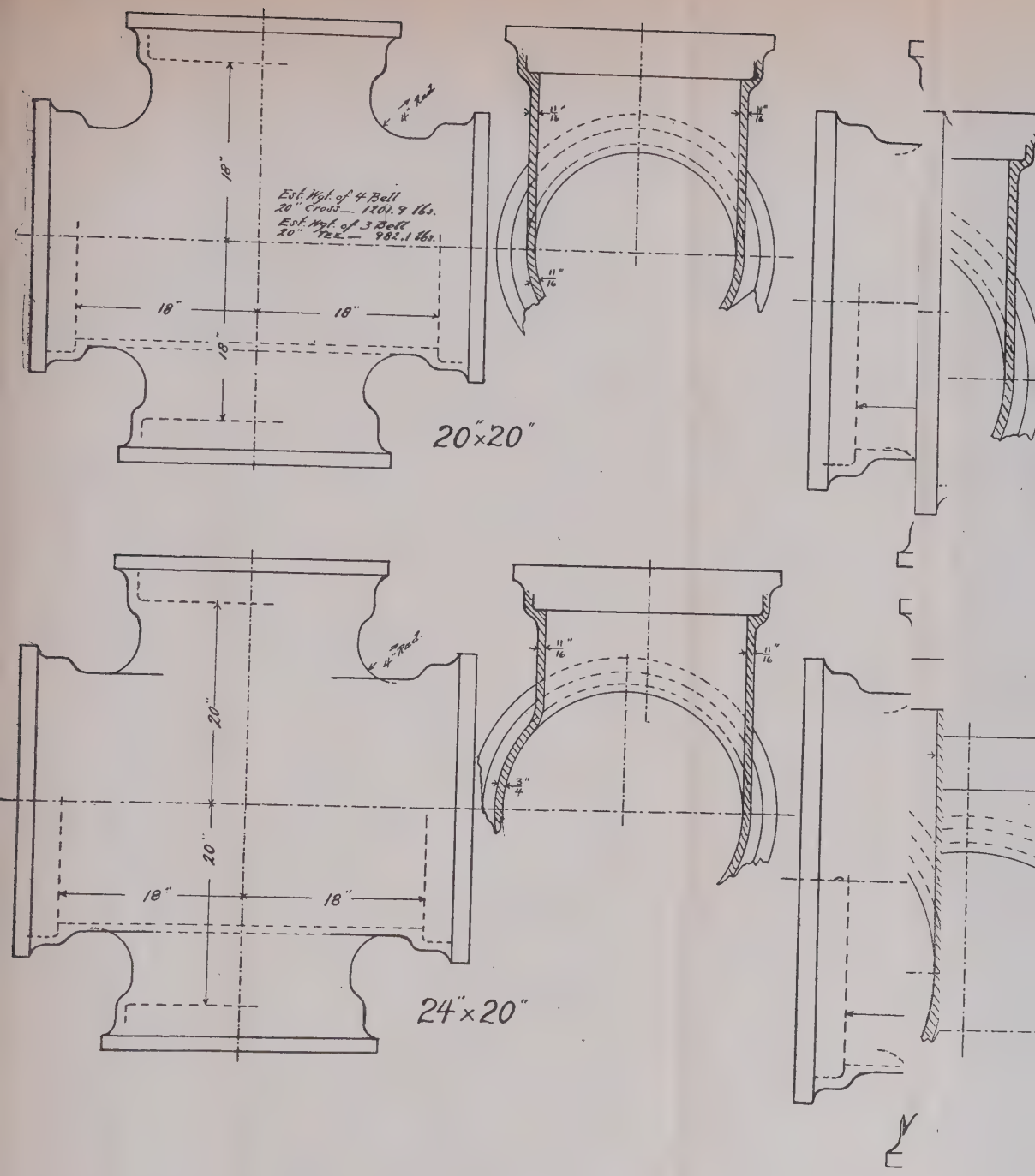

PROPOSED CAST-IRON CROSSES & TE T-IRON

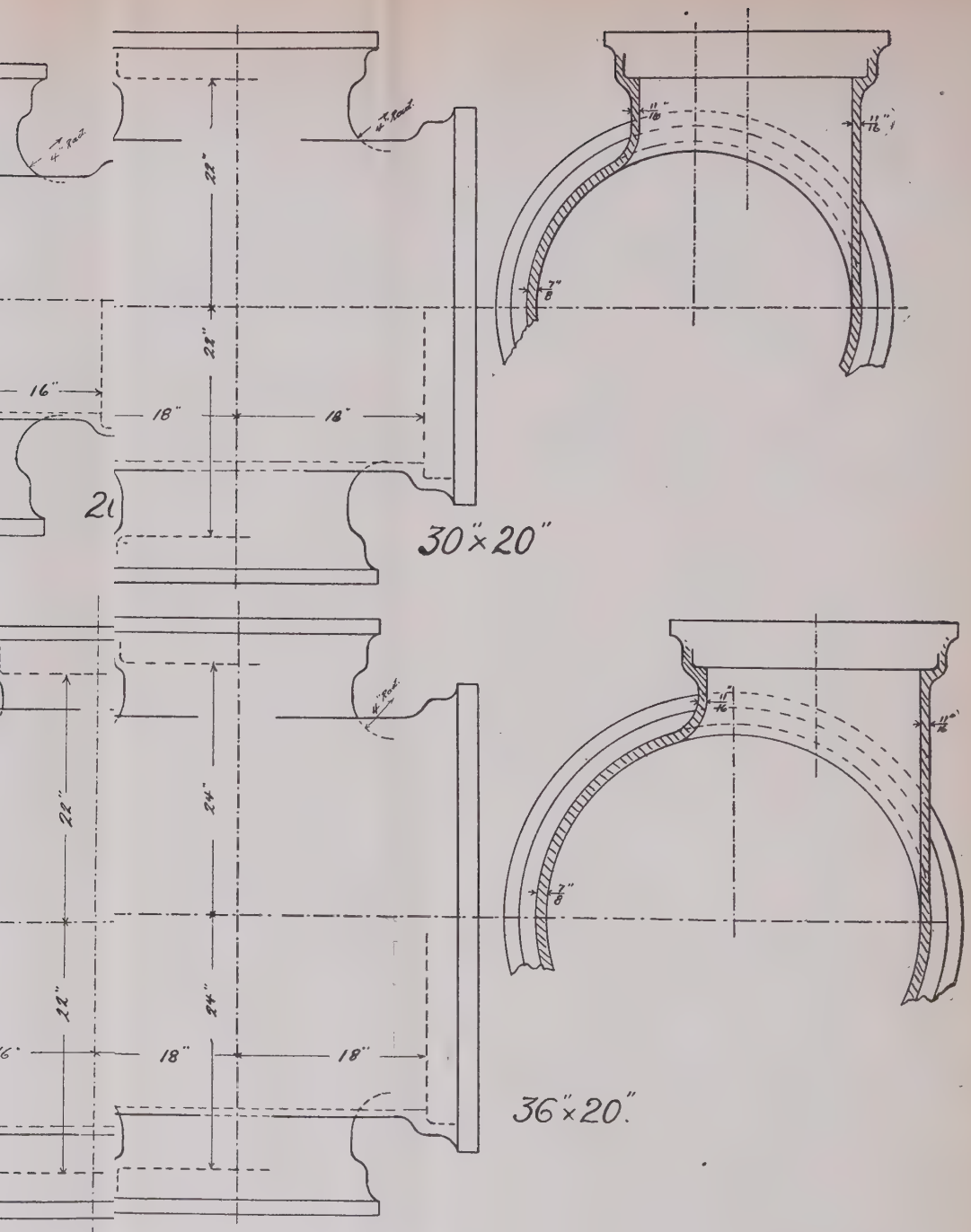

ES WITH TWENTY INCH OUTLETS.

ITH SIX

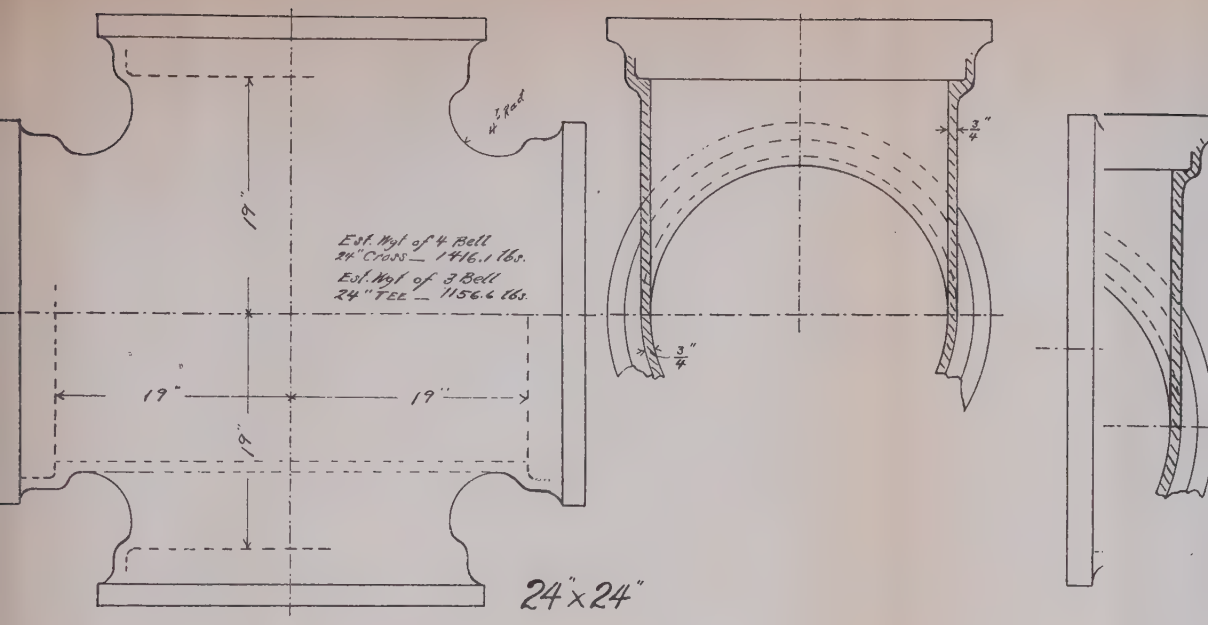

24"×24"

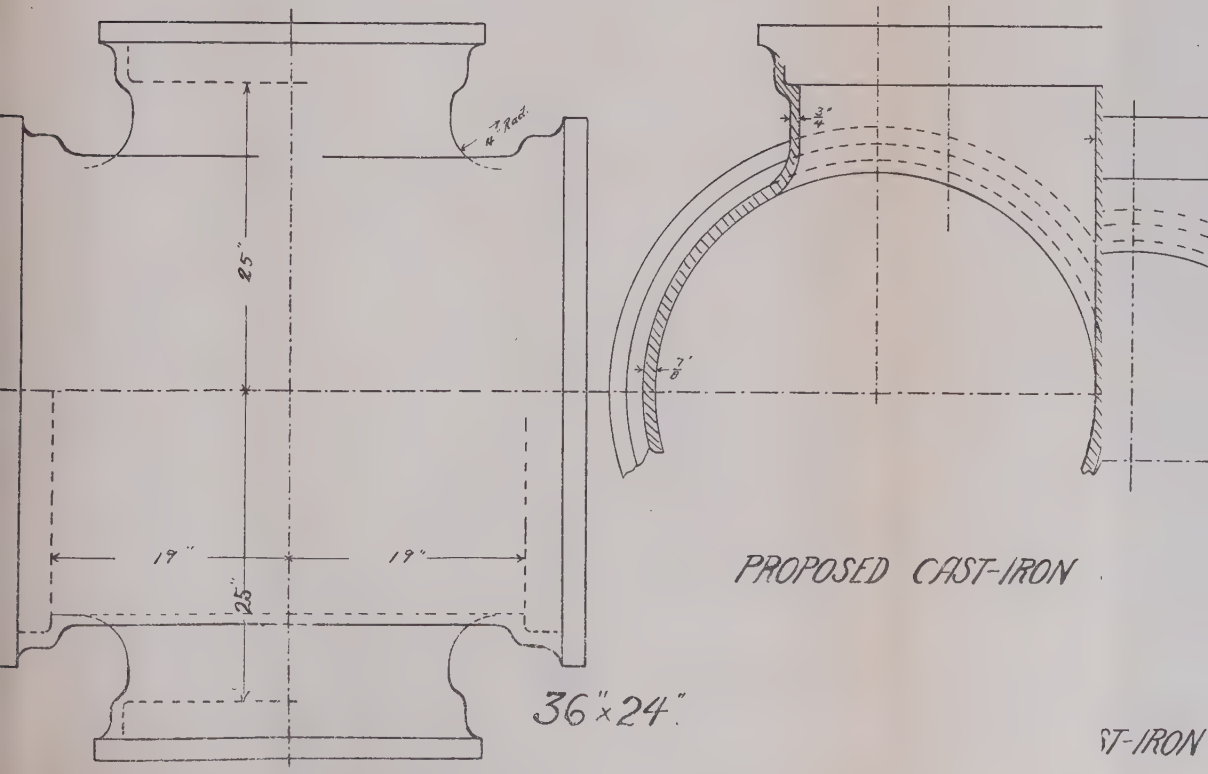

36"×24"

PROPOSED CAST-IRON

ST-IRON

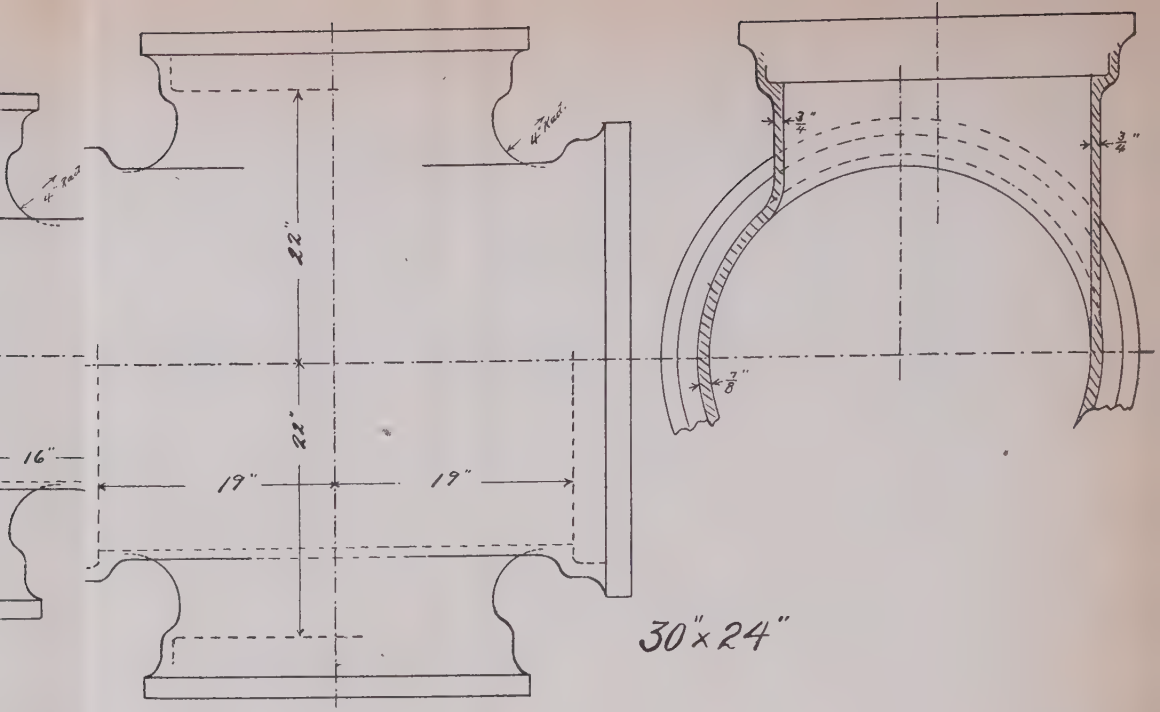

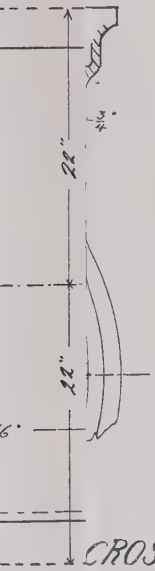

CROSSES & TEES WITH TWENTY-FOUR INCH OUTLETS.

ITH

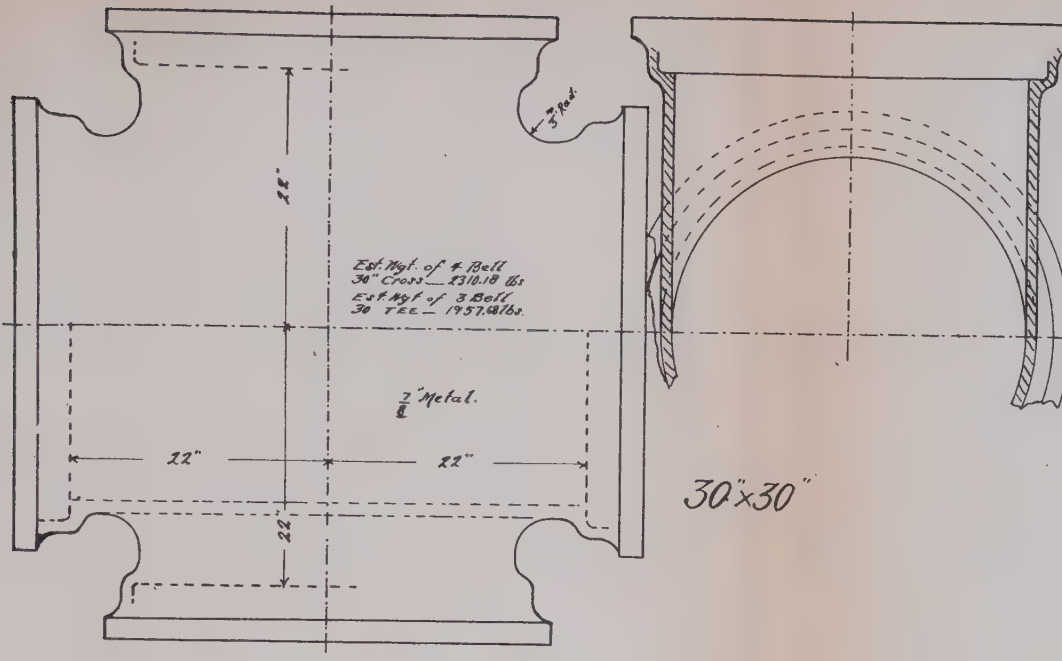

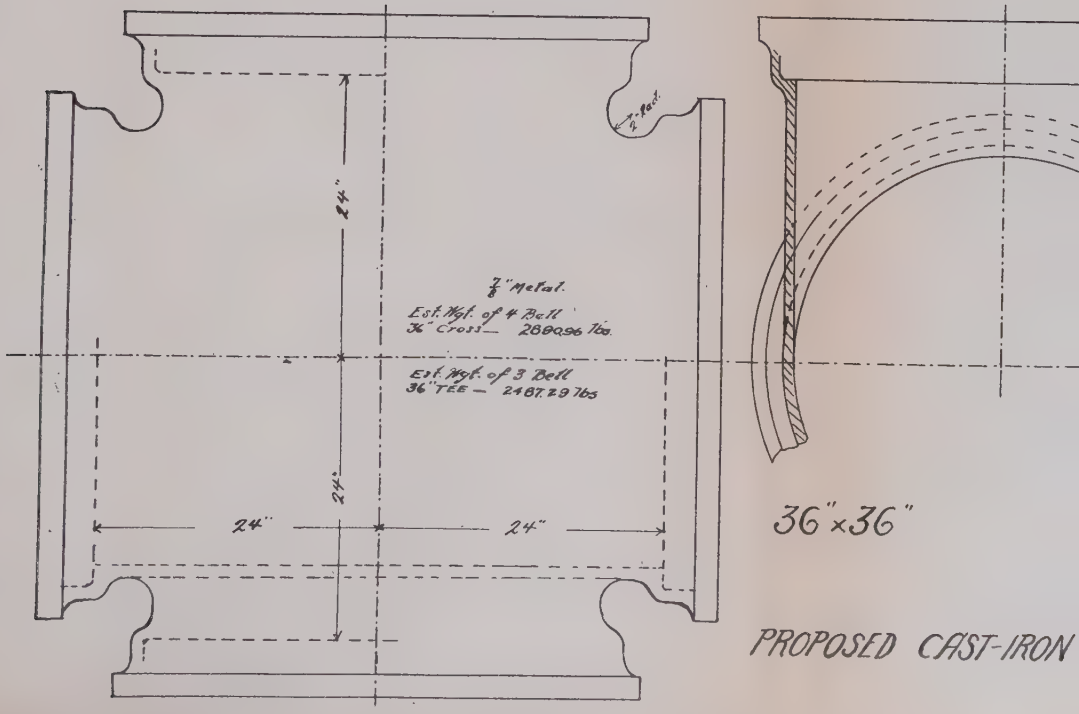

PROPOSED CAST-IRON

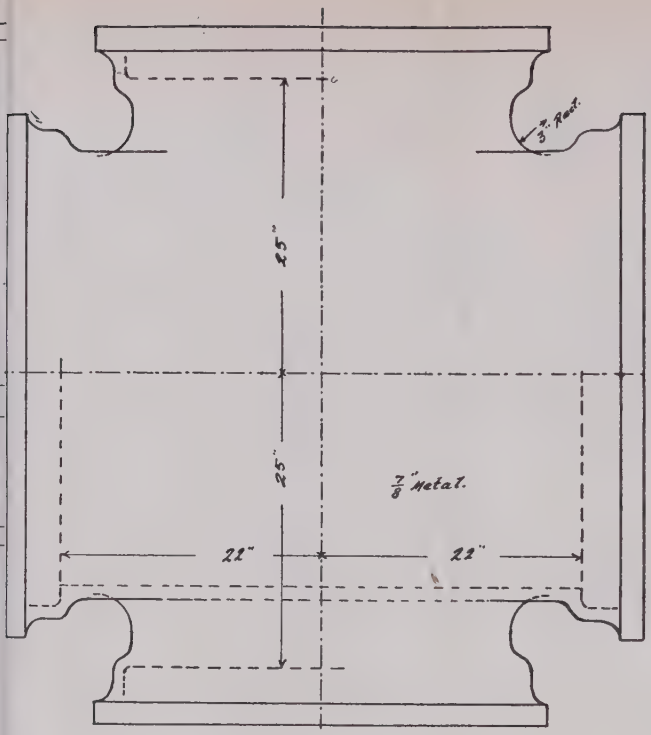

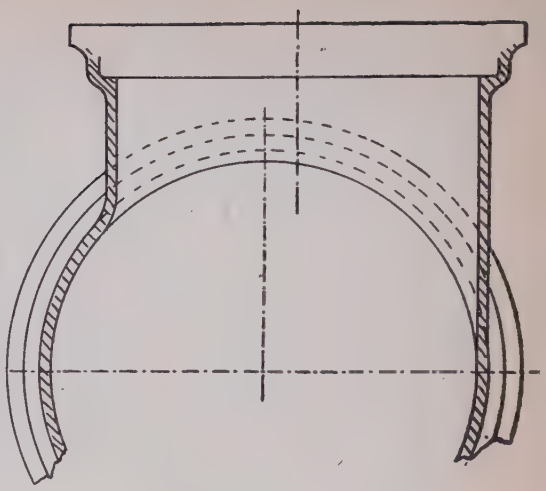

36"x30"

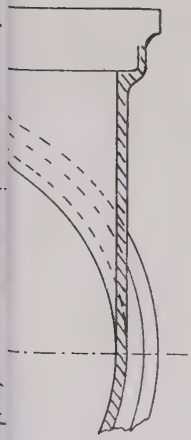

PROPOSED CAST-IRON CROSSES & TEES WITH THIRTY INCH OUTLETS.

36"x36" CROSS & TEE.

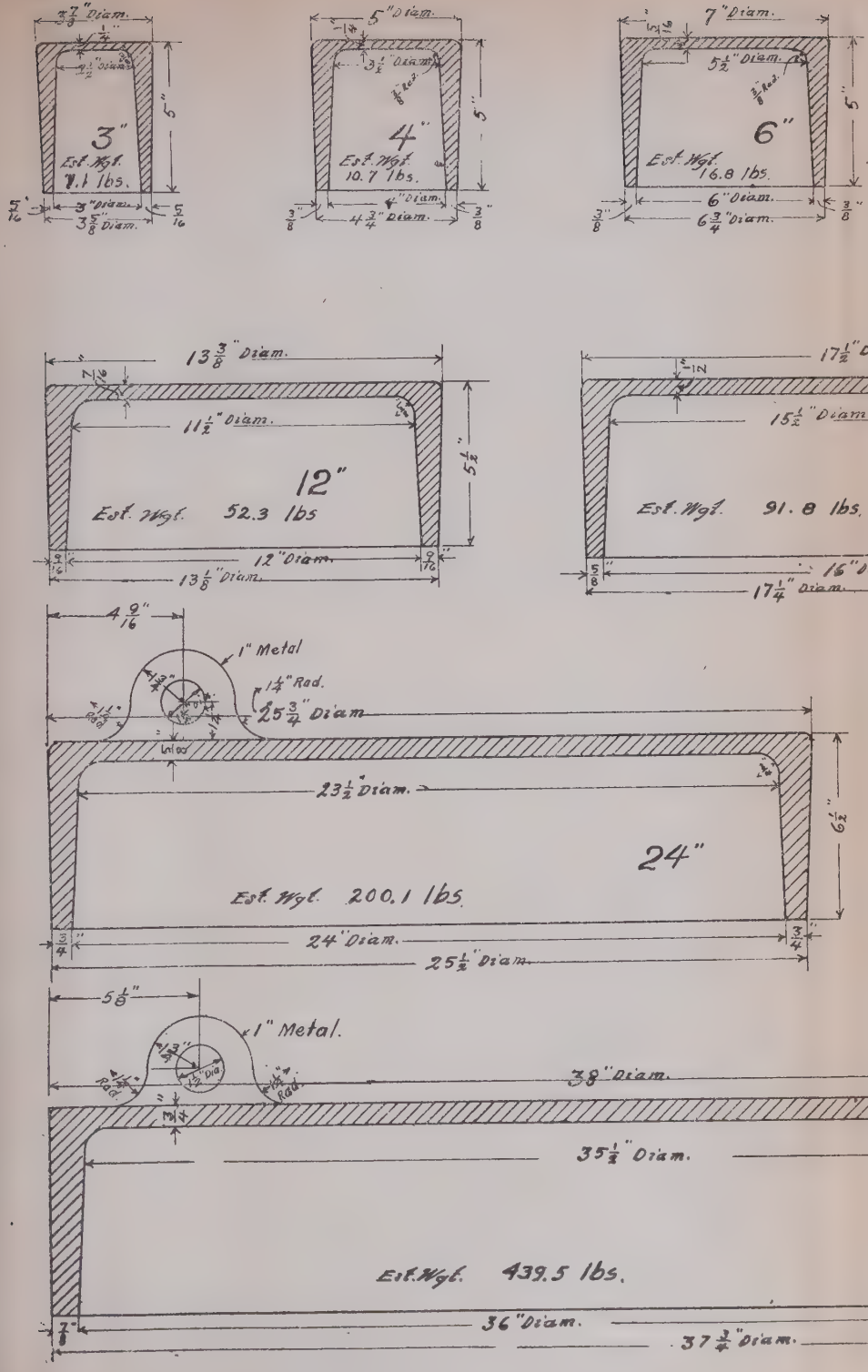
3" Diam.
5"
3"
Est. Wgt.
7.1 lbs.
3" Diam.
3 5/8" Diam.
5/16
5/16
5" Diam.
3 1/2" Diam.
3/8" Rad.
5"
4"
Est. Wgt.
10.7 lbs.
4" Diam.
4 3/4" Diam.
3/8"
3/8"
7" Diam.
5 1/2" Diam.
3/8" Rad.
5"
6"
Est. Wgt.
16.8 lbs.
6" Diam.
6 3/4" Diam.
3/8"
3/8"
13 3/8" Diam.
11 1/2" Diam.
5 1/2"
12"
Est. Wgt. 52.3 lbs
12" Diam.
13 1/8" Diam.
17 1/2" Diam.
15 1/2" Diam.
Est. Wgt. 91.8 lbs.
16" Diam.
17 1/4" Diam.
4 9/16"
1" Metal
1 1/4" Rad.
25 3/4" Diam.
23 1/2" Diam.
6 1/2"
24"
Est. Wgt. 200.1 lbs.
24" Diam.
25 1/2" Diam.
5 1/8"
1" Metal.
38" Diam.
35 1/2" Diam.
36
Est. Wgt. 439.5 lbs.
36" Diam.
37 3/4" Diam.

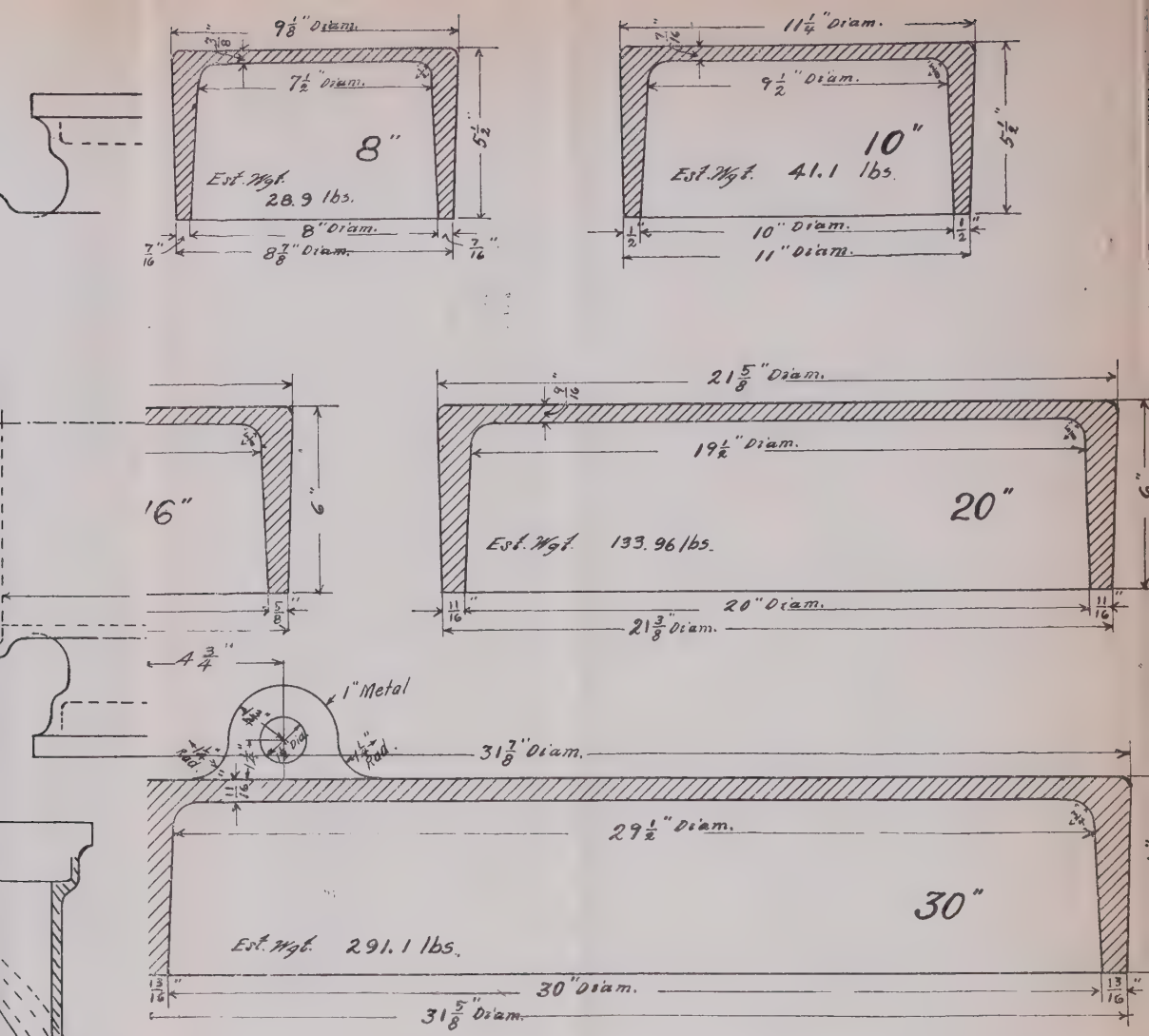

PROPOSED CAST-IRON PLUGS.

"36" CROS

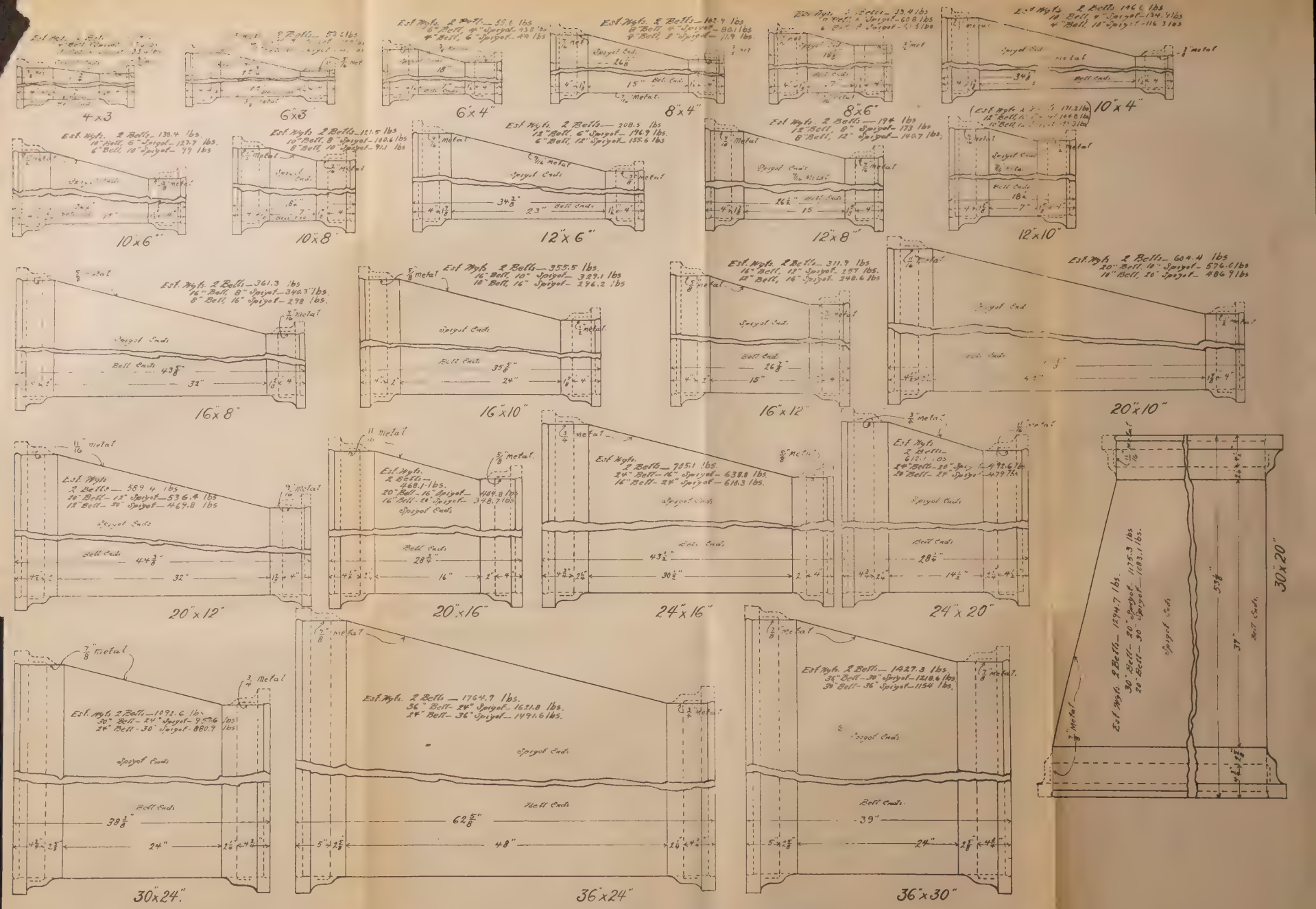

PROPOSED CAST IRON REDUCERS.

Solid Sleeves.

Mr. Butterworth—Approves proposed design.

Mr. Roberts—No mention.

Mr. Eustace—No mention.

Mr. Morris.—Thinks beads too large and will cause trouble in slipping the sleeve from one end of the pipe to the other, unless the two ends are exactly in line. Thinks standard should be extended to include 48-in. size.

Ys.

Not criticised by any member of the Committee.

S Bends.

Not criticised by any member of the Committee.

Flange Pipe.

No changes in the 1905 standard proposed.

APPENDIX TO REPORT OF THE TRUSTEES GAS EDUCATIONAL FUND.

(This Appendix was not read at the Meeting.)

Seventh Series of Questions—Section of 1909—Practical Class—Trustees Gas Educational Fund.

1. Describe one or more of the methods commonly employed for gasifying oil, when this is used for the direct enrichment of coal gas.

2. Give a description, illustrated with sketches, of an ordinary dry centre valve for four purifying boxes built to put three in action at one time, showing the divisions of the seat and cover and describing the action of the valve. Describe also one of the forms of dry centre valve which allow of the use of all four boxes at once.

3. Give a description, illustrated with sketches, of an automatic by-pass valve for a coal gas exhauster.

4. What are the results sought to be obtained in the condensation of illuminating gas during its manufacture, and what are the precautions to be observed in carrying on this process in order to secure the cooling of the gas to the proper point with the smallest loss of candle power?

5. An illuminating gas has the following composition by volume:

Carbon Dioxide, CO_2	2.9%
Oxygen, O_2	0.5%
Heavy Hydrocarbons	12.5%
Carbon Monoxide, CO	31.3%
Hydrogen, H_2	32.0%
Marsh Gas, CH_4	14.2%
Higher Paraffins, C_nH_{2n+2}	2.3%
Benzene Vapor	0.7%
Nitrogen, N_2	3.6%

Calculate the heating power per cubic foot, assuming the heavy hydrocarbons to be Olefiant Gas, C_2H_4, and the higher paraffins to be Ethane, C_2H_6. Calculate both the actual heating power and that with the water formed by the combustion of the hydrogen and hydrocarbons passing off as vapor at a temperature of 212° F. as explained in the answer to question No. 5 of the Sixth Series.

6. Under what conditions will a balloon rise when filled with a gas lighter than air and how much weight can be lifted by a balloon filled with 2,500 cu. ft. of gas, having a specific gravity of 0.63?

7. When laying street mains how would you test the tightness of the work before filling in the ditch and covering up the pipe?

8. Give a description, illustrated with sketches, of the method of connecting a 1 in. service to a 3 in. cast iron main.

9. What should be the size and weight of the lead pipe used for making connections for a 3-light, 5-light and 10-light meters respectively?

10. How often should consumers' meters be tested to ensure their accuracy?

11. How does an incandescent gas burner differ from a luminous flame burner in the manner in which the light is produced from the gas, and how do you account for the difference in the amount of light which can be obtained from a cubic foot of gas by the two classes of burners?

12. What precautions must be taken when laying brick in cement mortar to secure the greatest strength in the finished work?

Answers to Seventh Series of Questions—Section of 1909—Practical Class—Trustees Gas Educational Fund.

An answer to question No. 12 has already been published

in Vol. I of the Proceedings, page 301. The answers to the other questions are as follows:

1. Describe one or more of the methods commonly employed for gasifying oil, when this is used for the direct enrichment of coal gas.

Ans. Oil gas for the direct enrichment of coal gas may be made in the following manner: One, or more, of the ordinary coal gas retorts are set aside for the purpose, and suitable pipe connections made between each one of these retorts and a small overhead tank holding from 50 to 150 gallons. In each connection there should be a siphon sufficiently long not to be blown by any pressure that is liable to exist in the retort under normal conditions. A valve should be placed on the oil pipe near the tank with another one near the retort. The oil may be fed to the retort by gravity alone, or it may be blown in with steam. In the former case a sight feed is desirable as it affords an opportunity to see at all times the rate at which the oil is being run into the retort. Such a feed can be made of a Mason fruit jar (see American Gas Light Journal, Vol. 74, page 605, or Progressive Age, Vol. 19, page 190), and should be placed next the oil valve nearest the retort and between this valve and the retort, but before the siphon. After passing through the sight feed and siphon, the oil flows into the retort by a pipe screwed into the side or top of the mouthpiece with a long thread, so that a coupling can be screwed on the end inside the mouthpiece. A short nipple with either a union, or long thread and coupling, on its other end is screwed into the coupling, then another nipple and an elbow pointing to the back of the retort. From this elbow the pipe, supported on bricks so as to clear the bottom by three or four inches, is run to within 18 in. of the back of the retort, then turns and runs back to the front, then makes a second turn and runs back until its open end is about 1 in. from the back wall of the retort. During its travel back and forth in the pipe the oil is vaporized by the heat to which it is exposed and the vapor formed, escaping from the open end, is gasified in passing from the back to the front of the retort. The flow of oil is regulated

to suit the heat, the correctness of the adjustment being determined by the appearance of the stain produced on a piece of white paper against which a jet of gas, issuing from a small orifice in the retort mouthpiece or standpipe, is allowed to impinge. A dry straw-colored stain is obtained when the retort is working properly, while a greasy stain shows that too much oil is being run in, and a sooty stain that too little oil is being used. An expert oil gas maker can regulate the flow of oil by the appearance of the vapor as it issues from the orifice without the use of the white paper for obtaining a stain.

The pipe inside the retort should be 2 in. in diameter; that carrying the oil to the retort ¾ in. to 1 in..

When the oil is blown in by steam a steam connection is made to the oil pipe outside of, but near to, the retort in such a way that the stream of oil flows across the jet of steam and is thus picked up and carried along. A ½ in. steam pipe, with its end drawn down to an opening 1/16 in. to 1/32 in. in diameter, screwed into one end of a tee set with its run horizontal and its side outlet, into which the oil pipe is screwed, vertical is very commonly used. After passing through the side of the mouthpiece, the ¾ in. or 1 in. oil pipe turns and running parallel to the axis of the retort passes through a cap on the end of a piece of 5 in. pipe and into the open end of a 2½ in. or 3 in. pipe fixed concentrically inside of the 5 in. pipe. The back end of the 2½ in. pipe is closed and the 1 in. pipe extends to within three or four inches of the closed end. As indicated above, the front is open and within three or four inches of the closed front of the 5 in. pipe, which has the back open and about 12 in. from the back of the retort. By this arrangement the oil and steam is made to travel back through the 1 in. pipe, forward through the annular space between this and the 2½ in. pipe, and then back through the annular space between this and the 5 in. pipe, from the open end of which it escapes as vapor to be gasified while passing along the retort to the mouthpiece and standpipe. The flow of oil is regulated by the same test as is used for the gravity feed, and as little steam is used as possible, the valve being

barely raised from its seat. It is claimed that the use of steam prevents the pipes inside the retort from blocking up with carbon, otherwise it has no advantages, and the largest manufacturers of straight oil gas in this country prefer the gravity feed without any steam.

Another method of gasifying oil for the enrichment of coal gas is known as the "cartridge" method. In one modification of this method a cylinder, made by flattening and welding the ends of a piece of 3 in. or 4 in. pipe about 3 ft. long and provided with a circular opening in the side about ¾ in. in diameter, is filled with oil, the opening closed with a cork or wooden plug, and the "loaded cartridge" is then thrown into a retort on top of the coal when the retort is charged. The cork or wooden plug is carbonized by the heat, and as the oil vaporizes from the same cause the vapor escapes through the opening and mixes with the coal gas.

In another modification the cartridges consist of pieces of 2 in. or 3 in. pipe, 3 ft. or 4 ft. long, which are plugged at one end with a wooden plug and filled with sawdust. Oil is poured in until the sawdust is thoroughly saturated, then the open end is also plugged with a piece of wood and the "cartridge" is used as above.

This method may be used as a temporary expedient, but if direct oil enrichment is adopted for regular use it is better to make the oil gas in retorts set aside for that purpose, in which the oil can be gasified under properly regulated conditions that cannot be obtained when it is used in a retort charged with coal. Moreover, the extra labor required to fill and handle the cartridges is entirely avoided when the oil is run into the retorts by gravity. (Trustees.)

2. Give a description, illustrated with sketches, of an ordinary dry centre valve for four purifying boxes built to put three in action at one time, showing the divisions of the seat and cover and describing the action of the valve. Describe also one of the forms of dry centre valve which allow of the use of all four boxes at once.

Ans. For a description and sketch of the ordinary dry

centre valve built to put three purifying boxes in action at one time see Vol. I of the Proceedings, page 286. The answer to the latter portion of the question is given below.

One form of centre valve which is so constructed as to permit of the use of either one, two, three or four purifying boxes at a time is illustrated on the cut accompanying this answer.

The construction of the body of this valve is the same as that of the corresponding part of the ordinary centre valve, except that the position of the main inlet and outlet are reversed, the inlet being through the annular portion and the outlet through the central circular portion, but it is provided with two movable covers or caps instead of one. The main cap is free to turn on the body and the upper auxiliary cap turns on the main cap and can be placed and locked in any one of four positions. When it is so locked the two caps can be turned together as if forming only one piece. The position occupied on the main cap by the auxiliary cap determines the number of purifiers that are in use at any one time, while that of the main cap on the body determines which box shall be the first of the series in use independent of the number.

As will be seen by a study of the section and plan shown on the cut, the main cap is entirely open on the bottom except for a plate covering 3/8 of the annular space corresponding to the annular main inlet in the body. The remaining 5/8 of this annular space is open at the bottom so that the gas can pass up from the corresponding space in the body, but side walls are arranged, as shown, so that the only outlet from this space in the cap is through an opening in the outside wall leading into the only one of the eight outer compartments, the same in size and position as the outer compartments in the body, that is covered and not open on top. This being the only compartment open to the inlet it must always serve as the inlet to the first purifier. It will also be seen from the plan that all of the outer compartments of this cap are shut off from the central main outlet, which is open at both top and bottom, and that the gas coming back through the outlet from the first puri-

fier and compartment B_2 of the body into compartment MC_2 of the cap can escape only by passing up into the auxiliary cap.

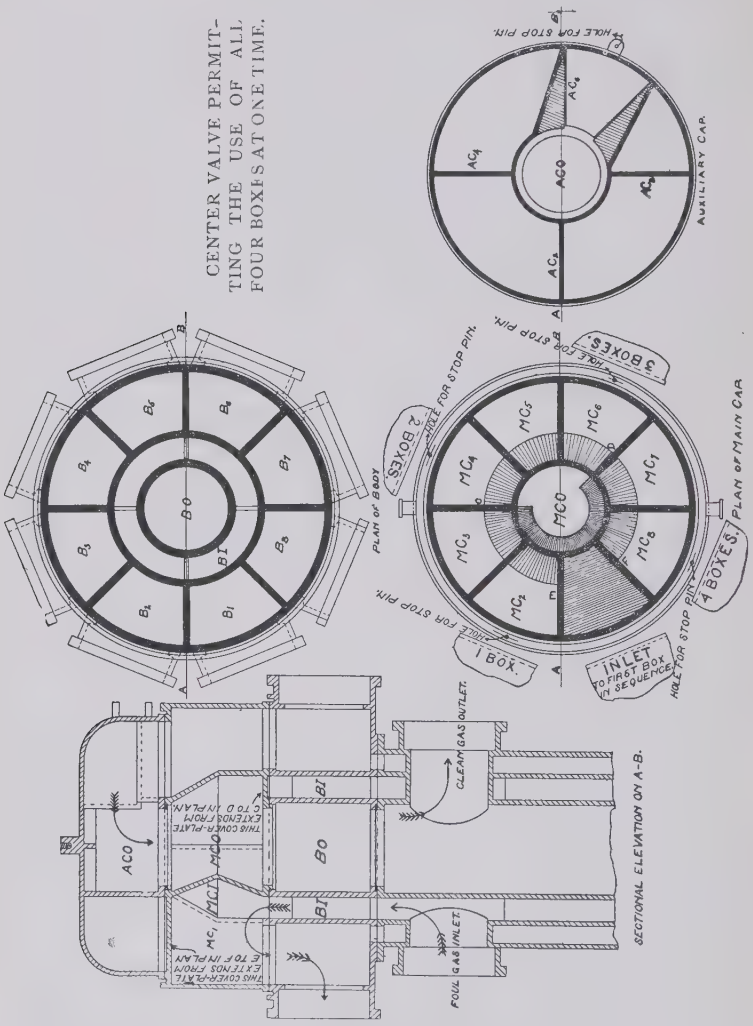

This auxiliary cap is divided into one central outlet and five outer compartments, all open at the bottom but closed on top. One of the outer compartments, corresponding in shape and area on the bottom with the shape and area of the top of each

of the outer compartments in the main cap, is open to the outlet compartment. Three of the other outer compartments, each having bottom openings which cover the top openings of two adjacent compartments of the main cap, are completely isolated from each other and from the central compartment, being open only to the compartments of the main cap over which they lie. The fifth outer compartment never comes into use, being always over either the inlet to a purifier that is off or the covered top of the inlet compartment of the main cap when all four purifiers are in use. This auxiliary cap can be set on the main cap in any one of the four different positions marked by the four lugs shown with holes for the pin that, passing through the hole in the lug on the auxiliary cap into one or other of them as desired, locks the two caps together so that both can turn on the body in unison. The number of purifiers in use for each position is shown on the plan.

By combining the various sections and plans, it will be seen that when the auxiliary cap is set in the one-box position, compartment AC_6 of the auxiliary cap will be directly over compartment MC_2 of the main cap and the gas will travel from the foul gas inlet into and through the annular compartment BI of the body, compartments MCI and MC_1 of the main cap, and compartment B_1 of the body, to the purifier, then from the purifier into and through compartments B_2 of the body, compartment MC_2 of the main cap, compartment AC_6 of the auxiliary cap and the central openings ACO, MCO and BO, in the auxiliary cap, main cap and body respectively, to the main outlet.

If the auxiliary cap is set in the two-box position the travel of the gas is the same until compartment MC_2 of the main cap is reached. As the division wall between compartments AC_6 and AC_4 of the auxiliary cap will be over the division wall between compartments MC_4 and MC_3 of the main cap, the wall between compartments AC_4 and AC_2 will be over that between MC_2 and the covered inlet compartment. Therefore the gas will pass from MC_2 up to AC_4 and going over the wall between MC_2 and MC_3 will pass down through MC_3 into B_3 and thence into the second purifier. Coming back from

this it will go through compartments B_4 and MC_4 into AC_6 and from there to the main outlet as before.

By the aid of templates, cut out as advised for the ordinary centre valve, the members of the class can work out the course of the gas when three or four purifiers are put in action, and can also see how turning the two caps together will bring each box in succession first in the series without altering the number in action. (Trustees.)

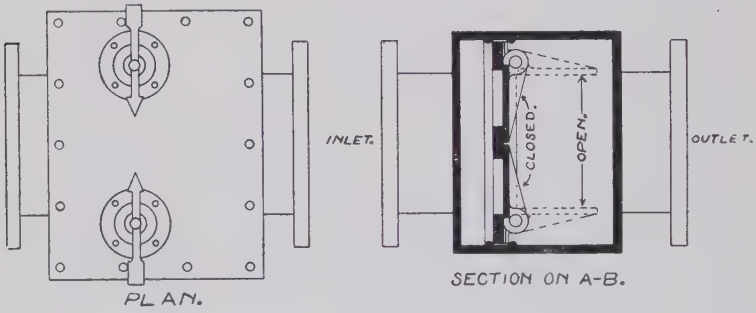

AUTOMATIC BY-PASS VALVE FOR COAL-GAS EXHAUSTER.

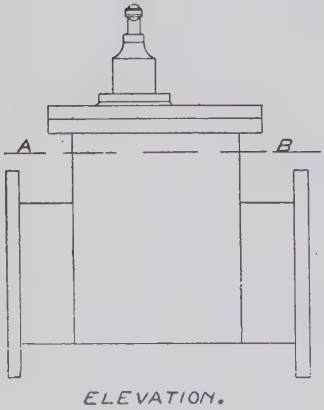

3. Give a description, illustrated with sketches, of an automatic by-pass valve for a coal gas exhauster.

Ans. The common form of automatic by-pass valve for a coal gas exhauster is often called a "butter-fly" valve. It con-

sists of a cast iron casing, either cubical or spherical, provided with flanges, by which it is attached to the pipe, and with a partition crossing it at right angles to the direction of the pipe. In this partition are two rectangular openings having their long edges vertical, and separated from each other by a strip of iron no wider than is necessary to allow for two narrow facings, one on each edge, which form part of the seats of two rectangular wing valves covering the openings. These valves are pivoted on their outer edges so that they open away from each other towards the sides of the casing. To each valve is attached a rod which comes through a stuffing box or mercury seal in the top of the casing and has on it a short arm, serving both as a lever by which to open the valve and also as a pointer showing its position. The valve is set in the by-pass pipe with the side of the partition upon which the valves seat toward the outlet side of the exhausters and therefore the backs of the valves are subjected to the outlet pressure and their faces to the inlet pressure. As long as the exhauster is running the outlet pressure is the greater and keeps the valves firmly seated, but as soon as the exhauster is stopped for any reason the inlet pressure becomes greater than the outlet, the valves are forced open and the gas can pass freely through the by-pass. The valves should be tried at regular and frequent intervals to see that they are not stuck to the seats and will be opened before the pressure rises to an excessive height. (Trustees.)

4. What are the results sought to be obtained in the condensation of illuminating gas during its manufacture, and what are the precautions to be observed in carrying on this process in order to secure the cooling of the gas to the proper point with the smallest loss of candle power?

Ans. The results which are sought to be obtained in the condensation of illuminating gas are the complete and harmless removal from the gas, in a condition and at points that permit of their being easily handled, of those vapors, the deposition of which, inevitable under conditions certain to be met with as the gas travels through the works and the mains, will cause

great annoyance and damage to the illuminating power of the gas if not effected at the proper points and in the proper manner. At the same time no vapors should be taken out that the gas can be made to retain with advantage. Condensation is perfect only when the gas leaves the apparatus containing just the amount of hydrocarbon vapors that will fully saturate it at the minimum temperature and maximum pressure to which it is to be subjected in the distributing system.

To secure this result and so secure the cooling of the gas to the proper point with the least loss in candle power the following precautions must be observed. All heavy tar should be removed from the gas before its temperature has fallen below 100° F. Contact between gas and heavy tar at temperatures lower than that at which the tar condenses out should be reduced to a minimum, and the gas should never be allowed to bubble through tar. The foul main should be protected to prevent any marked drop in the temperature of the gas while passing through it. Sudden chilling of the gas is to be avoided especially during the last stages of condensation, and the reduction of temperature between the outlet of the hot tar extractor and that of the condensers should be brought about very gradually. The last requirement can be met only by having well designed condensers of ample capacity, the proper handling of which is secured by keeping a careful watch on the temperatures at all points in the apparatus and varying the conditions accordingly. (Trustees.)

5. An illuminating gas has the following composition by volume:

Carbon Dioxide, CO_2	2.9%
Oxygen, O_2	0.5%
Heavy Hydrocarbons	12.5%
Carbon Monoxide, CO	31.3%
Hydrogen, H_2	32.0%
Marsh Gas, CH_4	14.2%
Higher Paraffins, C_nH_{2n+2}	2.3%
Benzene Vapor, C_6H_6	0.7%
Nitrogen, N_2	3.6%

Calculate the heating power per cubic foot, assuming the heavy hydrocarbons to be Olefiant Gas, C_2H_4, and the higher paraffins to be Ethane, C_2H_6. Calculate bothe the actual heating power and that with the water formed by the combustion of the hydrogen and hydrocarbons passing off as vapor at a temperature of 212° F. as explained in the answer to question No. 5 of the Sixth Series.

Ans. The heating power per cubic foot of an illuminating gas can be calculated, when the composition by volume of the gas is known, by multiplying the heating power per cubic foot of each combustible constituent of the gas by the volume of such constituent contained in a cubic foot, as shown by the analysis, and then adding together the products of these multiplications, the sum obtained by this addition being the required heating power per cubic foot of the gas.

The combustible constituents of the gas, the analysis of which is given in the question, are the Heavy Hydrocarbons which are to be considered as being Olefiant Gas, C_2H_4, Carbon Monoxide, CO, Hydrogen, H_2, Marsh Gas, CH_4, the Higher Paraffins which are to be considered as being Ethane, C_2H_6, and the Benzene Vapor, C_6H_6.

The heating power per cubic foot of these various gases is as follows:

	Actual	Water as Vapor at 212° F.
Heavy Hydrocarbons, assumed to be C_2H_4	1,621	1,515
Carbon Monoxide .....CO	325	325
Hydrogen .....H^2	328	275
Marsh Gas.....CH_4	1,016	910
Higher Paraffins, assumed to be....C_2H_6	1,772	1,613
Benzene Vapor.....C_6H_6	3,732	3,572

Therefore, the actual heating power of the gas is $(1621\times 0.125)+(325\times 0.313)+(328\times 0.320)+(1016\times 0.142)+(1772\times 0.023)+(3732\times 0.007)=202.6+101.7+105.0+144.3+40.8+26.1=620.5$ heat units, and the heating power with the water passing off as vapor at 212° F. is $(1515\times 0.125)+(325\times 0.313)+(275\times 0.320)+(910\times 0.142)+(1613\times 0.023)+(3572\times$

0.007)=189.4+101.7+88.0+129.2+37.1 + 25.0 = 570.4 heat units.

In round numbers 33 per cent. of the heating power of the gas when the water passes off as vapor at 212° F. is derived from the Heavy Hydrocarbons, 18 per cent. from the Carbon Monoxide, 15 per cent. from the Hydrogen, and 23 per cent. from the Marsh Gas contained in it. (Trustees.)

6. Under what conditions will a balloon rise when filled with a gas lighter than air, and how much weight can be lifted by a balloon filled with 2,500 cubic feet of gas, having a specific gravity of 0.63?

Ans. A balloon will rise only when its total weight with all appurtenances is less than the weight of the air displaced by it. The case is, to a certain extent, the same as that of equal volumes of two liquids, which will not mix and have different specific gravities, placed one in each leg of a siphon gauge. The heavier liquid will force up the lighter until its upper surface stands at a level which is higher than the level of the upper surface of the heavier liquid by an amount proportional to the difference in weight between them. In this case a state of equilibrium is soon reached owing to the limited quantity of the heavier liquid present to take the place of the lighter liquid as it is forced up, but with the balloon there is an unlimited supply of air to fill up the spaces successively vacated as it rises, and the ascending motion continues until a height is reached at which, owing to the elevation, the weight of the air displaced has become so much reduced as to be only equal to the weight of the balloon and its attachments. At this height the balloon will float as long as no change is made in its weight, in that of the air per unit of volume, or in the volume of air displaced.

To determine the weight (including, of course, the weight of the balloon itself) that can be lifted by a balloon filled with 2,500 cubic feet of gas having a specific gravity of 0.63, it is assumed that both gas and air are dry and at a temperature of 60° F. and a pressure of 30 in. of mercury, and that the displacement of the balloon is equal to the volume of gas con-

tained in it. The last assumption, while not perfectly accurate, is sufficiently so for all practical purposes. Since a cubic foot of dry air at the temperature and pressure named weighs 0.076357 pounds, 2,500 cubic feet will weigh 190.893 pounds. The 2,500 cubic feet of gas in the balloon having a specific gravity of 0.63 will weigh 190.893×0.63 and, therefore, the weight of the air displaced will exceed the weight of the gas by $190.893 \times 0.37 = 70.6302$ pounds, and the balloon can lift any weight less than this. (Trustees.)

7. When laying street mains, how would you test the tightness of the work before filling in the ditch and covering up the pipe?

Ans. When the piece of main being laid is an extension of an old main it is usually connected to the old main when the work is begun and the test for tightness is made with gas pressure. After such a length has been laid as to warrant going to work to fill in and close up the ditch, the open end of the pipe should be tightly plugged and the pressure allowed to come on the new pipe by removing the bag or stopper by which the gas has been shut off. Each joint should then be painted with soapsuds and examined for leaks, which will be indicated by bubbles at the points of leakage. Especial attention should be paid to the bottom of the joints. Any joints found to be leaking must be gone over and again tested. When all are tight the ditch can be filled in.

In testing in this way no attempt is made, as a rule, to test for leaks in the pipe between the joints, but if each length has been carefully hammered before it is lowered into the ditch there is only a slight chance of there being any such leaks. When the work is important enough to warrant the extra expense the new pipe can be left separate from the old and a temporary connection made through a meter. Then after the pressure has been equalized on both sides of the meter, observation of the test hand will show whether any more gas is passing and thus indicate the presence or absence of leaks. If the meter shows that there are leaks they must be located by an examination of the joints and pipe, using soapsuds on the

joints as above. When testing in this way it is necessary to see that there is no large rise or fall in the temperature of the piece of pipe under test, since the resulting change of volume of the gas would affect the indications of the test meter and might make the pipe appear tight when there were really some leaks on it, or make it seem to leak when it was tight. The proper allowance must be made for unavoidable change in temperature. After passing the test the new work is connected to the old main, generally with a sleeve.

When gas pressure is not available, or even in some cases where it can be had, but a test at a higher pressure than can be obtained from it is desired, the pipe is put under an air pressure by pumping air into it until a pressure of two to three pounds, equal to approximately 54 in. to 81 in. of water or 4 in. to 6 in. of mercury is reached. The joints should then be examined for leaks as described above, and the pressure watched to see if it holds up. The indications afforded by the steadiness of the pressure are as liable to be rendered worthless by change of temperature as are the meter readings, when a meter is used, and the temperature conditions must be noted and allowed for when the holding up of the pressure is relied on as the sole means for determining the tightness of the pipe, and for certainty it is necessary to examine the joints in each case.

In connection with the tests each caulker, where there are more than one on a job, should be made to mark with his name or number every joint which he makes, so that every imperfect one can be charged to the right man. The knowledge that all poor work will be immediately discovered and placed to their discredit makes the caulkers more careful with their work, and thus secures a better job, even apart from the discovery of leaks by the test. (Trustees.)

8. Give a description, illustrated with sketches, of the method of connecting a 1 in. service to a 3 in. cast iron main.

Ans. A 1 in. service is very frequently connected to a 3 in. cast iron main by drilling and tapping in the top of the main a hole for ¾ in. pipe, screwing into this a ¾ in.×1 in.×

1 in. street tee (the ¾ in. thread being the male thread) into the side outlet of which a 1 in. street ell is screwed, the other outlet on the run being plugged as shown on the cut. This

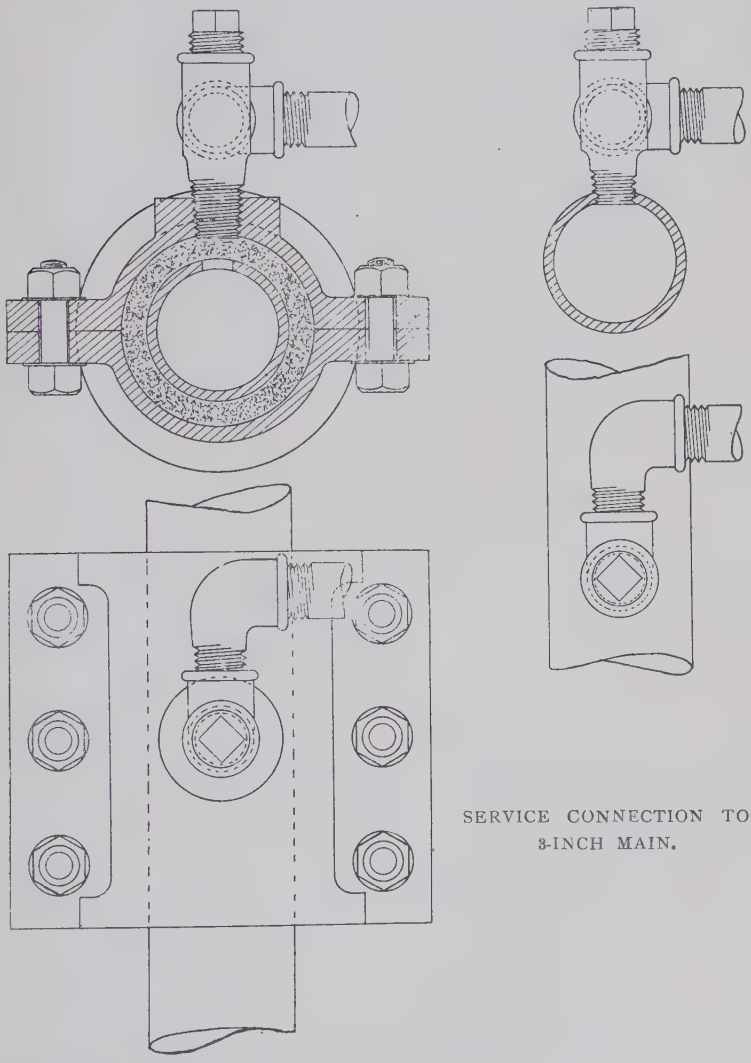

SERVICE CONNECTION TO 8-INCH MAIN.

gives a swing joint by which any strain that may result from a settling of the service is taken up without being transmitted

to the main. The street tee is used instead of another street ell because it affords an opportunity of shutting off the gas from the men while the service is being run, by inserting a rubber stopper on the end of a rod into the lower or ¾ in. outlet of the tee, and may also prove useful in providing an opening for cleaning purposes in case the service becomes obstructed at any time.

Where the conditions are such as to render it unwise to drill in the main a hole large enough to take ¾ in. pipe, a hole ¾ in. in diameter and untapped can be drilled and a split sleeve tapped for 1 in. pipe put on, the centre of the hole in the sleeve being brought directly over that of the hole in the pipe. This can be done by putting a wooden plug 5 in. or 6 in. long in the hole in the pipe and slipping the hole in the upper half of the sleeve over the end of this plug. The joint between the sleeve and the pipe having been made, the plug is removed and a 1 in. street tee is screwed into the hole in the sleeve, a 1 in. street ell screwed into the side outlet of the tee and the service run as before. An ordinary split sleeve may be used or a special service sleeve be made and kept on hand for the purpose. A drawing and a table of dimensions for such sleeves are given in Vol. XV of the Proceedings of the American Gas Light Association, pages xiv and xv, and also in the American Gas Light Journal, Vol. 69, page 712, and in Progressive Age, Vol. 16, page 525. (Trustees.)

9. What should be the size and weight of the lead pipe used for making connections for 3-light, 5-light and 10-light meters respectively?

Ans. The following sizes of lead pipe should be used for connections for the various sizes of meters covered by the question:

3-light, ⅝ in. 10-light, 1 in.
5-light, ¾ in.

The weight that should be used will depend upon the amount of care taken in supporting the meters upon shelves. When this is carefully looked after, so that none of the weight of

the meters is carried by the connections, good weights are as follows:

$\frac{5}{8}$ in. pipe for	3-light	.	$1\frac{1}{2}$ lb. per foot	known as	"C"	pipe
$\frac{3}{4}$ " " "	5-light	.	$1\frac{3}{4}$ " " "	"	"C"	"
1 " " "	10-light	.	2 " " "	"	"D"	"

When no particular attention is paid to the support of the meters, so that a large part of their weight is liable to be carried by the connections, it is well to use a heavier pipe and make the weights,

$\frac{5}{8}$ in. pipe for	3-light	.	2 lb. per foot	known as	"B"	pipe
$\frac{3}{4}$ " " "	5-light	.	$2\frac{1}{4}$ " " "	"	"B"	"
1 " " "	10-light	.	$2\frac{1}{2}$ " " "	"	"C"	"

It is better practice to use good shelves with care in setting the meters upon them properly and the lighter pipe, than to employ the heavier pipe merely to avoid having to exercise such care. (Trustees.)

10. How often should consumers' meters be tested to ensure their accuracy?

Ans. Opinions differ as to how often consumers' meters of the smaller sizes, that is, up to and including 10-light, should be tested in order to be certain that they are registering correctly. Some companies plan to bring in and test each year one-third of the total number of these smaller meters, so that all of them will be brought in for test every three years. Others lengthen the time out to five years, it being thought that this is a short enough interval if rigidly adhered to. If all meters are tested at least once in five years the meter registration may be considered accurate.

All meters brought in on account of removal or any other cause, should also be tested before being sent out again, even though there is no reason to suspect them of incorrectness, and they have already been tested in the regular course.

Large meters, those above 10-light, should be brought in and tested every year, since owing to the large amount of gas consumed through these meters any error is of greater con-

sequence than it would be in the smaller meters, and it is profitable to check them up every year. (Trustees.)

11. How does an incandescent gas burner differ from a luminous flame burner in the manner in which the light is produced from the gas, and how do you account for the difference in the amount of light which can be obtained from a cubic foot of gas by the two classes of burners?

Ans. An incandescent gas burner differs from a luminous flame burner in the way in which the heat produced by the combustion of the gas is transformed into light. As has been told in a previous answer, in a luminous flame the heat decomposes the hydrocarbons in the gas, forming particles of carbon, which it then raises to incandescence before they are consumed, and the light is given out by these incandescent carbon particles. The incandescent gas burner consumes the gas with a non-luminous flame in which there is no decomposition of the hydrocarbons, and the heat produced is employed to raise to incandescence a foreign body introduced into the flame.

The difference between the amounts of light produced per cubic foot of gas by the two styles of burners is thought to be due to two principal causes. In the first place, the substances of which the best incandescent bodies are made, namely thoria and ceria, in the proportion of from 98% to 99% of thoria to from 2% to 1% of ceria, convert a larger proportion of heat into light by converting the heat into the light rays which yield the greatest illuminating effect for the smallest expenditure of energy, that is, those forming the portion of the spectrum in and around the green, while the carbon particles in the luminous flame give off principally rays falling in the red and yellow portions of the spectrum, the lighting value of which is comparatively low.

In addition to this advantage it is thought that the temperature of the mantle is raised to a higher point than could be obtained solely from the heating effect of the flame from gas burning in air, by reason of catalytic action on the part of the ceria present. Cerium has the property of combining with oxygen in two different proportions, and Killing, a German

chemist, has advanced the theory that under the action of heat the ceria in the mantle becomes alternately the higher and the lower oxide of cerium, thus absorbing and setting free oxygen. The oxygen set free is liberated at the surface of the mantle, the very point at which its effect in increasing the temperature of the flame will be most efficient in raising the mantle to a higher temperature. And since the light emitted by an incandescent body increases rapidly as the temperature of the body rises, the higher the temperature to which the mantle is heated the greater the amount of light it will give out. Dr. Bunte, another German chemist, takes a different view of the way in which the effect is produced, and holds that instead of actually combining with the oxygen the ceria simply condenses upon its surface the molecules of oxygen and thus makes them available for combination with the gas in a manner similar to that in which platinum acts when used in the form of platinum black in the self-igniting devices recently put on the market. The final effect of the action of the ceria is the same, no matter which view is assumed as being true, and is to increase the flame temperature of the gas, and, consequently, the temperature to which the mantle is raised, by making the combustion take place to a certain extent in an atmosphere of oxygen and so decreasing the amount of nitrogen that has to be heated for any given volume of gas consumed.

While the above theories are not absolutely proved they seem to rest on a good foundation of experiment and to afford a satisfactory and probable explanation of the light-giving efficiency of the incandescent gas light. (Trustees.)

Eleventh Series of Questions—Section of 1908—Practical Class—Trustees Gas Educational Fund.

---

1. Give a description, illustrated with sketches, of some device by which the water admitted to a tower scrubber can be distributed uniformly over the whole surface of the scrubbing material.

2. Give a description, illustrated with sketches, of some form of steam jet that will give good results when applied to keep the water in the tanks or the cups of gas holders from ice.

3. How would you determine the horse power that was being developed in the cylinder of a steam engine?

4. What is the principal point to be borne in mind in running the exhaust pipe for a non-condensing steam engine?

5. What is the influence of heat upon the chemical reactions that occur in the purifiers, and what bearing does this influence have upon the question of the heating of purifying houses, revivifying sheds and lime rooms?

6. How would you make a working test to determine the proportion of volatile matter in any given sample of coal?

7. With a good market for coke at 16c. per hundred pounds, what is the value of tar as a fuel for heating retort benches?

8. The length of a certain run of main is one mile. For the first quarter of a mile a maximum of 16,000 cubic feet of gas per hour must be carried; from the quarter to the half mile, 14,000 cubic feet per hour must be carried; from the half to the three-quarters, 9,000 cubic feet per hour must be carried, and the amount delivered at the end of the run must be 6,000 cubic feet per hour. The gas has a specific gravity of 0.57; the loss of pressure should be uniform along the line; the total loss should not exceed 5/10 in., and the pipe rises 50 feet in the mile of run. Calculate the size of pipe required for each section.

9. Describe one or more of the various methods employed to prevent the deposition of naphthalene in a solid state in the mains and services, and give the theory of the method described.

10. The inventor of a patent process for making gas claims that from 12 pounds of coal and 14 pounds of oil he can produce 1,000 cubic feet of gas with a calorific value of 445 B.t.u. per cubic foot. The calorific value of the coal may be taken as 13,500 B.t.u. per pound, and that of the oil as 19,000 B.t.u. per pound. How can it be shown that the above claim is impossible of realization?

11. What cycle is employed in the Westinghouse gas engine, and what is the method by which the speed of the engine is governed?

12. Having selected concrete as the material for the wall of a gas-holder tank, describe the method that you would adopt to build up the wall and to insure its being water-tight.

Answers to Eleventh Series of Questions—Section of 1908—Practical Class—Trustees Gas Educational Fund.

An answer to a problem similar to the one in question No. 10 has already been given in Vol. II of the Proceedings, on page 169. An answer to question No. 11 has been included as part of a previous answer to be found on page 205 of Vol. I. Answers to questions Nos. 2, 5, 6 and 12 have also been published in the previous volumes, and will be found as follows:

No. 2, Vol. II, page 87.
No. 5, Vol. I, page 161.
No. 6, Vol. I, page 107.
No. 12, Vol. I, page 324.

The answers to the other questions are as follows:

1. Give a description, illustrated with sketches, of some device by which the water admitted to a tower scrubber can be distributed uniformly over the whole surface of the scrubbing material.

Ans. The greatest difficulty to be overcome in securing the even distribution, over the whole surface of the scrubbing material, of the water used in a tower scrubber, is found in the small quantity of water which is used in proportion to the amount of surface to be wet. This is especially the case when no power for operating mechanical appliances is available except such as can be obtained from the water to be used. As this is the case in the majority of the gas works in this

country, the devices employing outside power will not be considered in this answer.

The principal devices by which distribution is secured by the energy of the water used may be divided into three classes, those in which a constant flow is maintained through fixed orifices, those in which a constant flow is maintained through orifices revolving about the centre of the scrubber, and those in which an intermittent flow through fixed orifices is employed.

In the first class belong the systems of fixed pipes inserted at equally distant points around the circumference of the scrubber just below the top head, with long and short lengths alternating, as illustrated in the cut, and pierced with small holes on the lower side through which the water issues. This arrangement is satisfactory when comparatively large quantities of water are used, as in water gas scrubbers or for coal gas scrubbers fed with ammoniacal liquor, but with the small flow required for coal gas scrubbers in which clean water is used, the pressure of the water must be kept so low that a majority of the holes soon stop up and the distribution becomes very uneven. Another device of this class is the Gurney jet, in which a jet of water issuing at a high pressure from a small orifice strikes against an inverted cup, or in some instances a flat plate, fixed a short distance above the orifice, and is broken up by the force of its impact into a fine spray which is scattered over a circular area having the jet as its centre. If the area of the scrubber is not too large, one jet placed at the centre, just under the top head, is used, but in very large scrubbers it may be necessary to use several properly distributed over the area.

A device belonging to the second class which is frequently used is based on the same principle as the hydraulic tourniquet lawn sprinklers. It consists of a set of pipes radiating from a central fitting which is arranged so that it can rotate and at the same time be always open to a supply of water under pressure. Each pipe is pierced with holes on one side only, the various pipes being so fastened in the central fitting as to have the holes in all of them pointing in the same direction. When

the water is turned on, it issues from the holes and the reaction against the opposite sides of the pipes, which are solid, causes the whole system to revolve. To produce an even distribution

WATER DISTRIBUTORS FOR TOWER SCRUBBERS

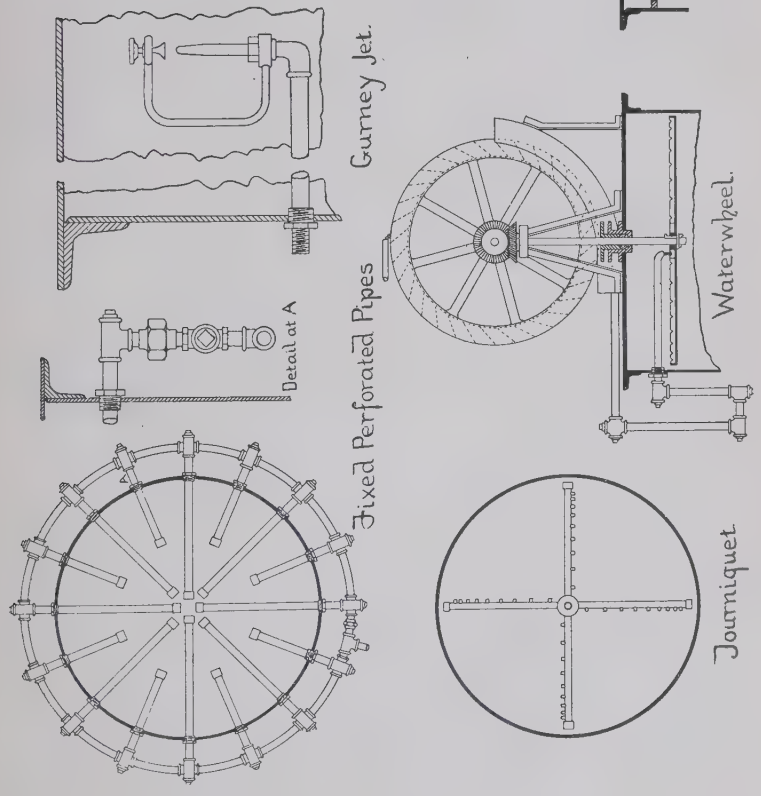

over the whole area, the distances between the holes are gradually reduced in going from the centre to the outer ends of the arms. In this form of distributor a good distribution can be secured with a smaller number of arms than when the pipes are fixed, and the greater flow through each orifice reduces the tendency for them to clog up, but it still exists to a certain extent. In another form belonging to the same class, the water is run into an overshot water-wheel made of heavy tin or galvanized iron and placed on top of the scrubber. This wheel drives the revolving distributor inside of the scrubber by means of bevel gears and a vertical shaft passing through a stuffing box in the head. The distributor consists of four or six radial arms, each of which is a shallow trough running out of a central trough. In the sides of these troughs notches are made through which the water runs out, the notches being closer together near the outer ends than they are towards the centre. Underneath the water-wheel is a funnel which catches the water dropping from the buckets. From this funnel a pipe with a syphon in it runs to the inside of the scrubber and delivers the water into the central trough of the distributor, from which it flows into the radial troughs and runs out through the notches. As the troughs are kept in motion as long as the water is flowing, this form of distributor gives a good distribution and is very free from any tendency to get out of order.

Devices of the third class consist of arrangements of tumbling barrels or syphoning chambers by means of which a comparatively large quantity of water is flushed into the scrubber at regular intervals. In the apparatus illustrated on the cut, a syphoning chamber is used. The water runs into the chamber continuously in a small stream, but none runs into the scrubber until the level rises above the top of the syphon. When this height is reached, the flow into the scrubber is started and is continued by the syphoning action until the lower end of the syphon is uncovered. The pipe through which the water flows being made large, say 2 in. in diameter, the water is run into the scrubber at a high speed and overflowing from a sealing pan spreads over a wooden tray which is made the full size of the scrubber. This tray is perforated with small

holes uniformly distributed over the whole surface, so that the water running through them wets the scrubbing material equally at all points. A small hole should be drilled at the top of the syphon, or an air cock should be attached at this point, to allow the air to escape from the syphon as the chamber fills up. (Trustees.)

3. How would you determine the horse power that was being developed in the cylinder of a steam engine?

Ans. The horse power developed by a steam engine is expressed by the quotient obtained by dividing the number of foot pounds of work developed by the engine in any interval of time by the number of foot pounds equivalent to one horse power for the given time. The work developed by the engine is equal to the total pressure in pounds exerted by the steam on the piston, multiplied by the distance in feet over which it is exerted in the given interval, and can be found, taking the time as one minute, by obtaining the continued product of the mean effective pressure in pounds per square inch of steam in the cylinder, the length of the stroke in feet, the area of the piston in square inches and the number of strokes per minute. This product is then divided by 33,000. The rule may be expressed in the following formula;

H. P. $= \frac{2\ PLAN}{33\,000}$ in which

P = Mean effective pressure of the steam in pounds per square inch.

L = Length of stroke in feet.

A = Area of piston in square inches.

N = Number of revolutions per minute.

The mean effective pressure may be determined exactly by the use of an indicator, which is an instrument used to measure and register continuously and simultaneously the conditions of pressure and volume of the working fluid existing in the cylinder of a heat engine at work.

The indicator consists of a cylinder containing a piston working against a spring. Attached to the piston is a rod with its head so connected to a lever that the motion of the piston

is multiplied and transferred to a pencil holder, the path of which is kept parallel to that of the piston by means of some form of parallel motion. A pencil placed in this holder can be brought into contact with a sheet of paper wrapped around a drum made to turn about its axis with a reciprocating motion by a cord wound round its base and connected to the proper point on a "pantagraph," or other form of "reducing motion," attached to and moving with the cross-head of the engine; which cord works in opposition to a spring fastened to the drum.

From the indicator cards obtained from both ends of the cylinder the mean effective pressure is found by determining the area enclosed by the diagram in each case. Dividing this area by its length the mean height is obtained, and this multiplied by the scale corresponding to the spring employed gives the mean effective pressure in pounds per square inch.

In the absence of any indicator cards from which to determine exactly the mean effective pressure of the steam it will be necessary to calculate this approximately from the boiler pressure and the point of cut-off, making a proper allowance for the back pressure. If the point of cut-off is not known, it can be determined quite closely by opening the drip cocks on the cylinder, cracking the throttle valve and turning the engine slowly backwards by hand. The point of the stroke at which the steam is first admitted to the cylinder when the engine is thus moved backwards will be shown by the steam beginning to escape from the drip cock, and this point, which can be obtained quite exactly by two or three trials, is obviously that at which the admission of steam is cut off when the engine is running. Knowing the point of cut-off and the initial pressure, which, if the steam pipes are covered and properly designed as to size, may be taken as from five to ten pounds less than the boiler pressure, according to the distance of the engine from the boiler, the mean pressure on the steam side of the piston can be obtained from steam engine tables. If the exhaust pipe is large and without sharp turns, the back pressure should not exceed from three to five pounds, so the mean effective pressure will be obtained by deducting, say, three pounds from the mean steam pressure.

Knowing the initial pressure of the steam in the cylinder and the point of cut-off, an ideal indicator card may also be constructed from which the mean effective pressure can be calculated.

The number of revolutions per minute can be obtained by a count when the engine is working under its load. All the factors being then known, the horse power developed can be calculated in the manner explained above.

It must be understood that the horse power thus calculated gives approximately the horse power developed in the cylinder, namely, the indicated horse power of the engine. The actual work which the engine is capable of doing is called the actual or brake horse power, and is less than the indicated horse power, the difference being the power required to overcome the friction losses in the engine. The friction of the moving parts of the engine is too uncertain for estimate when the size of the engine is unknown.

As an example, assume an engine with a stroke of 12 in. and a piston area of 100 square inches making 100 revolutions per minute with a steam pressure by gauge of 100 lb. at the boiler. With a loss of 5 lb. between boiler and cylinder the initial cylinder pressure will be, say, 95 lb. The point of cut-off is determined to be at one-quarter stroke. Then from the tables we find that the mean absolute pressure of steam expanding according to Mariotte's law to a volume four times its original volume is equal to the initial absolute pressure multiplied by 0.597. Absolute pressures are pressures measured from a perfect vacuum and are equal to gauge pressures plus the pressure of the atmosphere, which is commonly assumed as equal to 14.7 lb. The initial absolute pressure in the assumed case is therefore $95+14.7=109.7$ lb., and the mean absolute pressure is $109.7\times0.597=65.5$, so the mean pressure as measured by a gauge would be $65.5—14.7=50.8$ lb. From this must be deducted the back pressure, assumed to be 5 lb., leaving the mean effective pressure 45.8 lb. The factors then are:

$P=45.8$, $L=1$, $A=100$, $N=100$ and the approximate indicated horse power is:

$$\text{H.P.} = \frac{2 \times 45.8 \times 1 \times 100 \times 100}{33000} = \frac{91.6 \times 10000}{33000} = \frac{916000}{33000} = 27.7$$

If it is desired to use a theoretical indicator card to calculate the mean effective pressure, such a card can be constructed from the above data in the following manner:

Lay off on a vertical line the steam pressures in pounds per square inch above atmosphere. Lay off on a horizontal line intersecting this vertical line the stroke on any convenient scale. Then steam is admitted in the straight line A B, and expands along the line B C. At the point C, the exhaust valve opens to the atmosphere. The piston returns along the line D E against a pressure of 5 lb. above that of the atmosphere. The admission valve opens again at E, and the pressure immediately rises to what it was when admitted at the point A.

Card A B C D E A is, therefore, an ideal card for this engine, but we know that no engine can give an ideal card. The corners at B, C, D and E, are not right angles, but curves approximately, as shown on the dotted lines. The most difficult thing about the construction of this card is the plotting of the curve B C. The points on this curve may be found as follows:

In this engine the volume of steam up to the point of cut-off B is 300 cubic inches. If we expand this volume until it occupies a space of 600 cubic inches, the absolute pressure will be one-half of the initial absolute pressure of $95+14.7=$ 109.7 lb., or 54.8 lb., and by drawing the vacuum line as shown, 14.7 lb. below the atmospheric line on the same scale as was used for laying off the gauge pressures, and at half stroke drawing a vertical line and laying off on it 54.8 lb. above the vacuum line, the point P is obtained. Similarly, if we expand 300 cubic inches until it occupies three times that volume, the absolute pressure at the point P′ will be one-third of what it was at B, or 36.6 lb. Similarly, we may get as many points on this curve as we choose, and by connecting them produce the line B C. From this card we figure the mean effective pressure just as we would from any other card.

For the case given above the mean effective pressure would be practically as obtained from the tables and the indicated horse power would also be the same. (Trustees.)

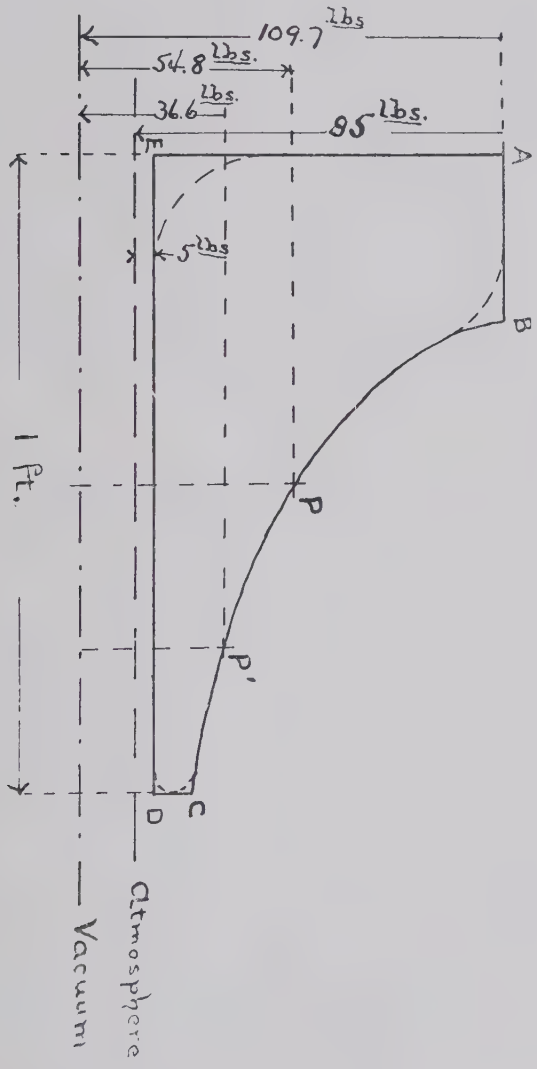

4. What is the principal point to be borne in mind in running the exhaust pipe for a non-condensing steam engine?

Ans. The principal point to be borne in mind in running the exhaust pipe of a non-condensing steam engine, or, for that matter, any other type of engine, is that the steam should be allowed to escape from the cylinder of the engine with as little resistance as possible to its flow, since whatever resistance is encountered throws just so much back pressure upon the piston of the engine and reduces the effective work done by increasing the amount of useless work. To avoid resistance the exhaust pipe should be made ample in size, and no sharp bends should be allowed—long turn elbows, or, better yet, pieces of pipe bent to long curves, being used for all turns which it is necessary to have. While these are very simple precautions they are very often overlooked, although the cost of the amount of steam saved by reducing the back pressure to a minimum will soon pay for all the extra expense incurred in running the exhaust pipe properly. (Trustees.)

7. With a good market for coke at 16c. per hundred pounds, what is the value of tar as a fuel for heating retort benches?

Ans. The advisability of using tar to replace coke as the fuel for retort benches when the market for tar was poor and that for coke good, has been frequently discussed at the meetings of the various gas associations, but in only a few cases have definite figures been given as to the amount of tar required to do the same work as a given amount of coke, and the figures given vary somewhat from each other. In a discussion at the meeting of the American Gas Light Association held October 18, 1876, Mr. Chas. H. Nettleton stated that experiments he had made showed that 2.6 gallons of coal-tar were equal to one bushel of coke for heating retorts, and Mr. W. H. Pearson said that he considered 2.5 gallons as the equivalent of a bushel of coke for this purpose, while according to Mr. Chas. Nettleton only 2 gallons were required to do the work of a bushel of coke. These figures were for direct-fire benches. In 1899 Mr. F. C. Sherman told the New Eng-

land Association of Gas Engineers that in half-depth (semi-recuperative) furnaces he was using 200 gallons of tar (presumably coal tar) to replace 72 bushels of coke, or 2.75 gallons for each bushel. In 1901 the same authority said that 150 gallons of water-gas-tar (oil tar) were equivalent to 66 bushels of coke, or 2.27 gallons for each bushel.

It is therefore safe to take 2.5 gallons of coal-tar as being a fair equivalent in actual working for one bushel of coke as bench fuel. A bushel of coke taken just as it comes from the retorts will weigh on an average 38 lb. If coke is worth 16c. per 100 lb., one bushel weighing 38 lb. will be worth $\frac{16}{100} \times 38 = 6.08$c., and therefore the equivalent value of tar will be $\frac{6.08}{2.5} = 2.43$c. per gallon. If 2.27 gallons of tar are taken as being able to do the work of one bushel of coke, then the tar, whether coal-tar or water-gas-tar, is worth, with coke at 16c. per 100 lb., $\frac{6.08}{2.27} = 2.63$c. per gallon.

While figures obtained from experiments on the heating of boilers are probably not strictly applicable to bench heating, they may be used as a check on the figures given above. Mr. C. F. Prichard, in a paper on the Fuel Value of Residuals, read before the American Gas Light Association in October, 1901 (see Proceedings of the Association, Vol. XVIII, page 77; American Gas Light Journal, Vol. LXXV, page 807, and Progressive Age, Vol. XIX, page 517), gives the equivalent values of coke, coal-tar and water-gas-tar for boiler fuel as $3.75 per ton (2,000 lb.) of coke, $1.17 per barrel (50 gallons) of coal-tar and $1.39 per barrel of water-gas-tar. With coke at 16c. per 100 lb., or $3.20 per 2,000 lb., the values of 50 gallons of coal-tar and of the same amount of water-gas-tar would be $\frac{1.17 \times 3.20}{3.75} = \$1.00$ and $\frac{1.39 \times 3.20}{3.75} = \$1.19$, respectively, or 2.0c. and 2.38c. per gallon. Mr. Prichard stated that the experiments from which the value of the coal-tar was determined were not entirely satisfactorily and he

thought that the true value per gallon was practically the same as that of water-gas-tar.

According to these figures the relative value of the tar as compared with coke is lower when it is used as boiler fuel than when used as bench fuel, but the two sets of experiments seem to check each other fairly closely. (Trustees.)

8. The length of a certain run of main is one mile. For the first quarter mile a maximum of 16,000 cubic feet of gas per hour must be carried; from the quarter to the half mile, 14,000 cubic feet per hour must be carried; from the half to the three-quarters, 9,000 cubic feet per hour must be carried, and the amount delivered at the end of the run must be 6,000 cubic feet per hour. The gas has a specific gravity of 0.57; the loss of pressure should be uniform along the line; the total loss should not exceed 5/10 in., and the pipe rises 50 feet in the mile of run. Calculate the size of pipe required for each section.

Ans. As the pipe rises 50 feet in the mile of run and the specific gravity of the gas is 0.57, there would be, if the main were delivering no gas at all, a gain of pressure equal to 0.3 in. of water at the delivery end of the pipe (see the answer to Question No. 6 of the Third Series). Therefore the effective loss in pressure available for causing the gas to flow through the main will be 0.5 in.+0.3 in.=0.8 in., and as the loss is to be uniform throughout the mile, there is an allowable loss of 0.2 in. for each quarter mile.

Applying the formula for the flow of gas in pipes we have for the first section,

$Q=16{,}000$ $\qquad$ $p=0.2$

$d=?$ $\qquad$ $s=0.57$

$(1)=440$

Therefore, $16{,}000=1{,}350\sqrt{\frac{0.2d^5}{0.57\times 440}}$ Dividing both sides of the equation by 50 and performing the multiplication in-

dicated in the denominator of the fraction, this becomes $320=27\sqrt{\frac{0.2d^5.}{250.8}}$ Squaring this we have $102,400=729\times\frac{0.2d^5}{250.8}$ from which we obtain $d^5=\frac{25,681,920}{729\times0.2}=\frac{25,681,920}{145.8}=176,145$ and d=11+ in.

For the second section,

d=? s=0.57

Q=14,000 p=0.2

(l)=440

Therefore $14,000=1,350\sqrt{\frac{0.2d^5}{250.8}}$ and reducing $280=27\sqrt{\frac{0.2d^5}{250.8}}$ Squaring this we have $78,400=729\times\frac{0.2\,d^5}{250.8}$ from which we obtain $d^5=134,175$ and d=10+ in.

For the third section,

Q=9,000 p=0.2

d=? s=0.57

(l)=440

Therefore, $9,000=1,350\sqrt{\frac{0.2d^5}{250.8}}$ and reducing $60=9\sqrt{\frac{0.2d^5}{250.8}}$ Squaring this we have $3,600=81\times\frac{0.2d^5}{250.8}$ from which we obtain $d^5=55,116$ and d=9— in.

For the fourth section,

Q=6,000 p=0.2

d=? s=0.57

(l)=440

Therefore, $6,000=1,350\sqrt{\frac{0.2d^5}{250.8}}$ and reducing $40=9\sqrt{\frac{0.2d^5}{250.8}}$ Squaring this we have $1,600=81\times\frac{0.2d^5}{250.8}$ from which we obtain $d^5=24,770$ and d=8— in.

This shows that if it is absolutely necessary to keep the

pressure from dropping more than 0.2 in. in each quarter mile the first two sections would have to have a diameter larger than 10 in. and the third section a diameter larger than 8 in. In every case the pipe would be made of the standard diameter next above the actual diameter worked out as being necessary. The main would therefore be 12 in. for the first half mile, 10 in. for the next quarter mile, and 8 in. for the last quarter. If, however, it makes little difference whether or not the drop of 0.2 in. is exceeded in any of the sections, so long as the total drop allowed on the full length is not exceeded and the variation from uniformity is not great, the first quarter mile could be made 12 in., the second and third quarters 10 in., and the last quarter mile 8 in.

In practice the results which have been obtained above by calculation can be obtained much more easily and quickly by the use of gas-flow computer, which is a device of the slide-rule type by means of which the size of pipe required to deliver any given quantity of gas under any given conditions of length of pipe, loss of pressure and specific gravity can be read off by making the proper adjustments of the various scales marked on the computer. The use of one of these computers enables all problems similar to the one above to be rapidly and quickly solved. (Trustees.)

9. Describe one or more of the various methods employed to prevent the deposition of naphthalene in a solid state in the mains and services, and give the theory of the method described.

Ans. The various methods employed, or proposed, to prevent the deposition of naphthalene in a solid state in the mains and services may be divided into two general classes—those which remove the naphthalene from the gas at the works by means of some absorbent, and those which consist in adding to the gas vapors of liquids having a solvent action on naphthalene and approximately the same vapor tension as that substance.

Methods of the first class have been adopted quite generally

on the continent of Europe and to some extent in Great Britain. In them the gas is washed or scrubbed with an oil which possesses the property of absorbing naphthalene vapor, the process being exactly similar to that by which the ammonia is removed from the gas. The operation is usually carried on in a rotary, mechanical scrubber, of the "Standard" type, in which either creosote oil, heavy tar oil or anthracene oil is used instead of water. A small amount of benzol, from 3% to 8% by weight, is added to the oil used, to saturate it and thus prevent it from absorbing benzol from the gas and reducing the illuminating power.

According to Dr. Bueb, Dessau, Germany, an anthracene oil boiling between 480 and 750 F. is used, and 176.4 lb. (19 to 20 gallons) of this oil removed, from 706,000 cu. ft. of gas, naphthalene to the amount of 200 grains per 1,000 cu. ft. The capacity of the oil for naphthalene increases with the temperature, and the naphthalene scrubber should follow the tar extractor and work on comparatively hot gas. In some cases, however, two or three compartments of the ammonia scrubber are used. After being saturated with naphthalene the oil can be put in a still and the naphthalene driven off, or it can be chilled, crystalizing the naphthalene, which is then removed by means of a filter press. In either case the oil can be used over again. If working on a small scale it may be more economical to run the saturated oil into the tar tank and sell it as tar.

The frequently employed method of running into the gas as it goes out into the district, naphtha which becomes vaporized and travels along with the gas, belongs to the second class. The naphtha is usually added to the gas at the outlet of the governor, being blown into the gas in a finely divided spray by a small steam jet atomizer. The success of this method depends upon the precipitation of the naphtha in liquid form at the time and place at which the naphthalene is deposited, so that the latter will be dissolved and carried off by the former, and as this does not always occur the remedy is not always successful.

A modification of the above method, known in England as the Hastings Carburation Process, consists in forming in the

gas, as it goes out from the works into the street mains, a mist of oil, the oil used being one that is not volatile at ordinary temperatures. This mist, of very minute drops, is formed by blowing the oil through specially constructed atomizers by means of a portion of the gas which is compressed to a pressure of 75 lb. per square inch. It is found that in this state of minute subdivision some of the oil will remain in the gas until it reaches the farthest point in the district. The conditions which will cause the deposition of naphthalene at any point will also precipitate enough of the oil to dissolve this naphthalene and carry it off as a liquid. It is stated that at Hastings one gallon of oil used in this way for each 166,000 cubic feet of gas is sufficient to do away with all trouble from naphthalene stoppages, although these begin to show as soon as the process is discontinued.

Much information on the subject of the prevention of deposits of naphthalene in street mains and services can be found in Vols. LXXII to LXXVI of the Journal of Gas Lighting. (Trustees.)

FOURTH SERIES OF QUESTIONS—SECTION OF 1910—PRACTICAL CLASS—TRUSTEES GAS EDUCATIONAL FUND.

1. What is thought to be the cause of spontaneous combustion in bituminous coal?

2. What is the action of the water seal as applied to the hydraulic main of coal gas benches and the washbox of a water gas apparatus?

3. Describe the construction of a double superheater Lowe carburetted water gas apparatus, illustrating the description with a sketch showing a vertical section of the apparatus

4. What are the causes of the deposition of carbon upon the interior of coal gas retorts?

5. What is meant by a "unit of heat" or "heat unit"? What is the difference between quantity of heat and intensity of heat?

6. Part of the district supplied by a gas company is 115 ft. higher than the works. The gas distributed is a mixture of coal and water gas having a specific gravity of 0.570. There is practically no flow of gas through the pipes supplying this portion of the district between the hours of 1 o'clock and 5 o'clock A. M. During this time the pressure at the outlet of the street main governor at the works is 18/10. What will be the pressure at the 115 ft. level?

7. Describe the ordinary tests used to determine whether tar, ammonia, NH_3, carbon dioxide, CO_2, and sulphuretted hydrogen, H_2S, are present in gas.

8. Name the impurities that are removed from crude illuminating gas by chemical action and the substances employed for their removal, and give as far as possible the chemistry of the operations.

9. Describe a bar photometer, such as is used for determining the illuminating value of gas by direct comparison of the light given by the gas with that given by standard candles.

10. Give a list of the various joints employed for connecting together the separate lengths of cast iron gas pipes, and state their respective advantages.

11. What is the minimum size of pipe which is considered advisable to use for services for ordinary dwelling houses? Give the reasons for your answer.

12. Describe the preparation and use of cement mortar for brick work, with the precautions to be observed to secure uniformity and strength.

Answers to Fourth Series of Questions—Section of 1910—Practical Class—Trustees Gas Educational Fund.

An answer to question No. 3 has been included as part of a previous answer to be found on page 334 of Vol. I of the Proceedings. An answer to a problem similar to the one in question No. 6 has already been given on page 137 of Vol. I.

Answers to questions Nos. 5, 7, 11 and 12 have also been published in the previous volumes, and will be found as follows:

No. 5, Vol. II, page 108.
No. 7, Vol. I, page 273.
No. 11, Vol. II, page 183.
No. 12, Vol. I, page 148.

The answers to the other questions are as follows:

1. What is thought to be the cause of spontaneous combustion in bituminous coal?

Ans. Investigations into the cause of the spontaneous ignition and combustion of bituminous coal have been made chiefly with reference to the occurrence of such combustion on board of coal-laden vessels, but there is no reason why the conclusions reached in the case of coal stored on board vessels should not apply to coal stored in sheds. The theory that is now generally accepted as a result of the careful investigations of several Commissions is that the occurrence of any spontaneous increase in the temperature of coal is due chiefly to the condensation and absorption by the coal of oxygen from the air, which causes heating and thus promotes the chemical combination of the oxygen with the volatile hydrocarbons in the coal and even with some of the carbon itself. The conditions favoring the occurrence of this action to an extent sufficient to generate enough heat to effect the ignition of the coal are "a moderately high external temperature; a broken condition of the coal, affording fresh surfaces for absorbing oxygen; a supply of air sufficient for the purpose, but not in the nature of a strong current adequate to remove the heat; a considerable percentage of volatile combustible matter or an extremely divided condition." The action of moisture upon the sulphur present in the form of iron pyrites is a secondary cause of heating principally because of its effect in breaking up the coal and presenting fresh surfaces for the absorption of oxygen.

Since the smaller the pieces the greater the proportion between the surface exposed to air and the mass of coal, small coal affords much greater opportunity for the occurrence of

the reaction between oxygen and coal which causes spontaneous combustion, and therefore such combustion is more apt to occur with small coal than with large coal. The presence of moisture increases the liability to spontaneous combustion to the extent to which it brings about the disintegration of the coal into small pieces and dust, and this secondary action may be, and in some cases is, an important factor in the occurrence of spontaneous combustion, but apart from this the presence of moisture retards any decided increase in temperature, both by retarding the absorption of oxygen by the coal and by reason of the large amount of heat which is absorbed in vaporizing the moisture. (Trustees.)

2. What is the action of the water when applied in the hydraulic main of coal gas benches and the washbox of a water gas apparatus?

Ans. The purpose of the water seal, as applied in the hydraulic main of coal gas benches and the washbox of a water gas apparatus, is to permit the free passage of the gas from the generating apparatus and to prevent its return. This "check valve" action is due to the large difference between the area of water in the washbox and that in the dip. If the dip pipe has an internal diameter of one foot and the washbox has a diameter of five feet, the area of the water in the washbox is approximately twenty-five times the area of the water in the dip pipe.

If the dip pipe dips two inches below the surface of the water in the washbox, a pressure only a trifle over two inches higher than the pressure in the washbox is all that is necessary to force gas through the water into the washbox. But, before any gas can pass back from the washbox into the dip pipe, all the water in the washbox above the bottom edge of the dip pipe must be forced up into the pipe. As the area of the washbox is twenty-five times the area of the dip pipe, the water in the box will fill the dip pipe $25 \times 2 = 50$ inches high before gas can pass. The above figures approximate those obtaining in actual practice. The coal gas hydraulic main operates on the same principle. (Trustees.)

4. What are the causes of the deposition of carbon upon the interior of coal gas retorts?

Ans. The carbon deposited upon the interior surfaces of coal gas retorts are caused by the carbon set free by the breaking down, into hydrogen and hydrocarbons containing less carbon and more hydrogen, of the heavier hydrocarbon vapors and gases evolved from the coal when these are exposed to heat. The extent to which the breaking down and the consequent setting free of carbon takes place depends upon the conditions existing in the retort. Since it is impossible to produce a fixed gas by the destructive distillation of coal or oil without setting free some carbon, a certain amount of deposit in the retort is unavoidable in coal gas manufacture. This unavoidable amount, may, however, be, and often is, largely increased by an over decomposition of the gases and vapors due to various causes.

Chief among these are high heats and unduly prolonged contact between the gas and the walls of the retorts. The higher the temperature to which hydrocarbons are exposed and the longer the exposure continues or the greater the amount of surface over which they pass, the more complete is their breaking down, until ultimately they are entirely decomposed into hydrogen and solid carbon. Other considerations render it economical to employ high heats for the distillation of coal in spite of the increased carbon deposits formed. and therefore it is important that care should be taken to make the extent of the exposure of the gas to contact with the walls of the retort as small as possible.

To accomplish this object the free space in the retort, that is, the space not occupied by the charge, should be made small and the gas should be allowed to flow from the retort in a steady stream without pulsations. The statement is very often made that throwing a pressure on the retorts retards the flow of gas from it and therefore increases the amount of carbon deposited. If the pressure were a steady one and within the limits ordinarily met with in gas works, it would have very little effect upon the speed with which the gas leaves the retort. However, gas escaping through dip pipes sealed in liquor

does not pass out under a steady pressure, since it must accumulate pressure before it can escape by forcing the liquor out of the dip pipe, and as soon as this pressure is relieved the seal is re-established to be again overcome, the result being a constant fluctuation of the pressure and a back and forth pulsation of the whole volume of gas in the retort as it travels along. It can be readily understood that any given volume of gas will be subject to more contact with the walls of the retort if it moves alternately backwards and forwards, even though the forward motion is relatively as rapid as it would be if it were steady, than it will be if the motion is continuous in one direction only. The greater the initial pressure to be overcome the more violent are the fluctuations and consequently the longer are the pulsations, and it is probable that it is in this way that pressure increases the deposition of carbon. A reduction in the amount of seal on the dip pipes also reduces the extent of the pulsation, and therefore reduces the amount of carbon deposited.

The principal causes of the deposition of carbon upon the interior of coal gas retorts seem thus to be a high temperature of the walls of the retorts and excessive friction of the gas against these walls by reason of the pulsating motion by which it escapes through the sealed dip pipe. The high temperature is necessary for economical working, but the flow of gas out of the retort should be made as steady as possible by reducing the depth of seal to the lowest point possible. (Trustees.)

8. Name the impurities that are removed from crude illuminating gas by chemical action and the substances employed for their removal, and give as far as possible the chemistry of the operation.

Ans. The impurities that are removed from crude illuminating gas entirely by chemical action are, sulphuretted hydrogen, H_2S, bisulphide of carbon, CS_2, cyanogen, CN, and carbon dioxide CO_2. Ammonia, NH_3, is removed from coal gas partly by chemical action and partly by simple solution in water, a physical action.

The substances which serve for the removal of ammonia

chemically are the carbon dioxide and sulphuretted hydrogen in the gas itself, and conversely the ammonia serves for the partial removal of the carbon dioxide and sulphuretted hydrogen. The reactions by which these three impurities combine with each other can, and should, be utilized to the greatest possible extent by washing or scrubbing the gas with the ammoniacal liquor deposited in the hydraulic main and the condensers. In this way the purifiers can be relieved of much work that would otherwise be thrown upon them. The carbonate and sulphide of ammonium formed do not contain definite proportions of the different substances, so no exact chemical reactions can be given.

The excess of sulphuretted hydrogen that cannot be removed by the ammonia may be taken out either by Hydrated Sesquioxide of Iron, or Ferric Oxide, the active material in iron sponge, or mass, or by Hydrate of Lime, slaked lime. In England a substance called Weldon Mud, a by-product from the manufacture of bleaching powder, the active ingredient in which is manganese dioxide, is also used in the purifiers for the removal of sulphuretted hydrogen, but none of it is employed in this country. Ferric oxide is, as a rule, cheaper than lime for the purpose. Its composition when freshly made is expressed by the formula $Fe_2O_3 . 3H_2O$, but under the conditions to which it is exposed in practice it loses water, and its actual composition as employed in gas works is probably that expressed by the formula $Fe_2O_3 . H_2O$. The reactions occurring in the purifiers between ferric oxide and sulphuretted hydrogen are expressed by the equations

$$Fe_2O_3 . H_2O + 3H_2S = Fe_2S_3 + 4H_2O \text{ and}$$
$$Fe_2O_3 . H_2O + 3H_2S = 2\ FeS + S + 4H_2O$$

of which the first is the principal one, only 17 per cent. to 30 per cent. of the sulphuretted hydrogen being taken up according to the second.

Ferric oxide will also absorb cyanogen to a certain extent, but if it is desirable to remove this substance in marketable form, it is better to absorb it by scrubbing the gas before the ammonia and sulphuretted hydrogen are taken out of it with a concentrated solution of sulphate of iron, $FeSO_4$. The am-

monia and sulphuretted hydrogen act on this solution to form sulphide of iron, FeS, and sulphate of ammonia $(NH_4)_2$, SO_4, according to the equation $FeSO_4+H_2S+2NH_3=FeS+(NH_4)_2\ SO_4$, and then the sulphide of iron acts on the cyanogen and the ammonia to form an insoluble double salt of ferrocyanide and ammonium, thus $2FeS+6NH_4CN=(NH_4)_2\ Fe_2\ (CN)_6+2(NH_4)_2\ S$. This compound of ferrocyanide and ammonium flows from the scrubber as a liquid mud and the cyanogen is obtained by treating it in the proper manner. (American Gas Light Journal, Vol. LXXIII, page 564.)

Hydrate of Lime, $CaO.\ H_2\ O$, slaked lime, is sometimes employed for the removal of sulphuretted hydrogen, but is, in most cases, more expensive than ferric oxide, and its use should be, as a rule, confined to the removal of carbon dioxide when it is considered advisable to remove this impurity. The reaction between lime and carbon dioxide is expressed by the equation $CaO.\ H_2\ O.+CO_2=CaCO_3+H_2\ O$.

The substance employed for the removal from gas of bisulphide of carbon, CS_2, when a special effort is made to remove this impurity, is the sulphided lime obtained by passing through slaked lime gas containing sulphuretted hydrogen, but no carbon dioxide nor oxygen. The exact composition of the compound of lime and sulphur formed by thus fouling slaked lime is not known, but it is supposed to be either calcium hydrosulphide, $Ca(SH)_2$, or calcium hydroxyhydrosulphide, CaOH. SH. In practice the slaked lime is sulphided after it has been placed in the purifying box, by passing through it in the usual way, and preferably while it is still warm, gas freed from carbon dioxide and oxygen, but containing sulphuretted hydrogen. After the lime is sulphided the valves are so set that the gas enters the box after having been freed from carbon dioxide and sulphuretted hydrogen. In this country it is not usual to make any special effort to remove bisulphide of carbon from illuminating gas, since carburetted water gas and the coal gas made from the majority of the gas coals do not contain any excessive amount of this impurity, and both lime used in the ordinary way and the free sulphur contained in oxide of iron that has been fouled and revivified several times will absorb

enough of it to bring the amount left in the gas below the point where its presence would be noticed when the gas is burned. (Trustees.)

9. Describe a bar photometer, such as is used for determining the illuminating value of gas by direct comparison of the light given by the gas with that given by standard candles.

Ans. The essential features of a bar photometer are a standard gas burner and a standard of light fixed at a definite distance apart, a graduated bar placed between the two lights with its longitudinal centre line in the vertical plane passing through the vertical axes of the lights, a vertical disc perpendicular to this plane and mounted in a box movable on the bar, a meter for measuring the rate at which the gas is consumed, a timepiece for measuring the time, and a balance to weigh the amount of sperm consumed by the candle flames during a test. Two pressure governors, one dry and one wet, a King's pressure gauge and a thermometer for determining the temperature of the gas at the meter are also parts of a fully equipped photometer.

All of the apparatus is mounted on a table of the proper length and of a height that will bring the centres of the lights and the disc, which should all lie in the same horizontal line, on a level with the eyes of the person making the test. Marks are placed on this table fixing, with the aid of plumb-lines suspended from a frame carried on the screens spoken of later, the position to be occupied by the vertical axes of the two lights when they are the required distance apart. This distance is usually taken as either 60 inches or 100 inches. A solid wooden screen extending across the full width of the table and painted a dull black is placed about 12 inches behind each light, and a similar screen, with an opening in the centre large enough to allow the rays of light to reach the disc without any interference, is placed about the same distance in front of each light. The object of these screens is to prevent light from reaching the walls of the room and being possibly reflected back from them.

The graduated bar extends the full distance between the

two front screens and is supported by stands fastened to the table. As stated above, the centre line of the bar must lie in the same vertical plane as the line drawn from the centre of one light to the centre of the other. It must also be set at such a height above the table that when the disc-box is mounted on it, the centre of the disc will be in the same horizontal plane as the centres of the lights. The top edge of the bar should be beveled so as to avoid any reflection of light from the edge to the disc, and it is well to have the side pieces fastened on the bottom to support the wheels of the sight box, also beveled, and all these surfaces should be made a dull black for the same purpose. The bar is graduated according to the law of inverse squares, so that the candle power of the gas can be read at once from the pointer attached to the disc-box. The graduation may be based either upon the use of a single candle or upon that of two candles. In the first case the figure at the point of the bar exactly half-way between the lights will be 1, and in the second case this figure will be 2. If the bar is graduated for a single candle and two are used, the readings must be multiplied by two to obtain the correct candle power.

The disc most often used is that known as the Leeson disc. It consists of a circular piece of white paper with a star-shaped hole cut out of its centre, placed between two pieces of thin white rice paper. The disc so formed is then put between two pieces of glass, cut from the same sheet so as to be of uniform quality and thickness, and the whole combination put in the blackened metal disc holder and pressed tightly together by means of a wire split-ring sprung into a grove in this holder. The paper must be left perfectly smooth when the disc is in place. Attached to the back edge of the disc-holder are two small mirrors, one on each side of the disc, set with their surfaces at an angle of 60 degrees with the plane of the disc, so that an observer standing directly in front of the edge of the disc can see images of both its faces, one in each mirror. The disc-holder and mirrors are mounted in the disc-box or sight-box in such a way as to be easily reversible, so that either face of the disc can be turned toward either light as desired.

The disc-box or sight-box is a rectangular wooden or metal box mounted on four wheels, which run on pieces provided for this purpose at the bottom of the bar, so that the box can be easily moved back and forth. An oval hole slightly larger than the disc is left in each end of the box, and in the face there is a slight hole, also oval, and about 6 inches long by 3 inches high, through which the reflections of the disc in the mirrors can be seen. A pointer is attached to the box with its point directly below the disc. This pointer passes over the scale on the bar and by means of it the candle power corresponding to any setting of the disc can be read.

The form of burner used varies for different kinds of gas, as explained in the answer to question No. 7 of the Second Series. In some photometers the vertical pipe on which the burner is mounted is fixed, while in others it is movable and can be brought to, and held in, the proper position by means of a long thumbscrew working through a fixed support on the table into a nut on the burner base. This burner pipe is fitted with two stop cocks, the lower one of the two being very carefully made and provided with a lever handle which is moved by a screw so as to secure a close adjustment. The upper one is an ordinary stop cock by which the gas can be turned on or off without disturbing the adjustment of the lower one.

Various standards of light are employed in photometric work, but only the arrangement of the photometer which provides for the use of candles will be described. It is customary to employ two candles, which are placed in a holder suspended by knife edges from the end of the beam of a delicate and accurate balance, which is nearest the disc. The holder is constructed so that the candles are on opposite sides of and equally distant from the continuation of the centre line of the bar. The candles are in some cases held by narrow metal bands in which they can be firmly clamped, while in others they are held in deep cylindrical cups, just large enough in diameter to permit the candles to slip into them, and with adjustable false bottoms, by raising which the flames can be readjusted to the proper height as the candles burn away. From the middle of the cross-piece joining the two candle supports is hung a pan

for the reception of the weight by which is determined the rate of burning of the candles during a test. On a knife edge at the other end of the beam hangs another pan into which are put small weights or shot to balance the candles. The candle balance is often mounted so that it can be moved back and forth along the line of the bar, so that the candle flames can always be brought to just the proper position with reference to the middle of the bar and the gas flame. Balances with arms of equal length are to be preferred to those with arms of unequal length. Care should be taken to keep the balance in good condition so that it will be sensitive and swing with a steady motion. A pointer attached to the beam at the fulcrum swings over a graduated arc and is over the centre line when the beam is horizontal and the candles just balanced by the weight at the other end.

The meter is a small, wet meter having a large dial, the hand on which makes one complete revolution for each twelfth of a foot passed. This dial is divided into five principal divisions and each one of these is subdivided into ten small divisions. The large divisions correspond to 1/60 of a foot. A smaller dial divided into twelve equal divisions, each corresponding to one complete revolution of the large hand is also provided on the face of the meter. Fastened to the side of the meter is a small box with a glass front, on which is a mark showing the water line, and with an opening on top through which the water can be added to bring it up to the proper height. This opening is closed by a screw cap. On top of the meter is a small clock, the hand of which travels around the same centre as the large hand of the meter and makes a complete revolution of the dial in one minute. When the hands of the meter and the clock travel at the same speed the gas is passing exactly at the rate of five feet per hour, and any other rate of burning can be determined by observing the difference between the speed of the two hands. The clock is worked by a weight and wound by means of a cord. It can be started and stopped as desired by means of a slide. When it is going, it rings a bell when the hand passes the division at the extreme top of the dial. A cord is arranged so that the clock can be started by the observer while standing at the candle end of the table.

Through an opening in the side of the meter a thermometer is inserted vertically into the gas space so that the temperature of the gas passing out of the meter can be noted.

The meter, wet governor and pressure gauge are set on the table back of the solid screen placed behind the burner, and the gas connections are made so that the gas coming from the supply passes first through the dry governor, then to the meter, then to the balance wet governor and then to the burner. The pressure gauge is provided with four connections, so that the pressure existing at any one of four points can be taken as desired.

The photometer should be placed in a room that can be kept well ventilated without drafts and from which all outside light can be excluded when making a test. The walls of this room should be painted a dull black to prevent any reflection of light from them to the disc.

The subject of the construction and use of the bar photometer has recently been very exhaustively considered by a committee of the American Gas Institute, in a report submitted at the 1907 meeting, and published in Vol. II of the Proceedings. This report should be read by the students. (Trustees.)

10. Give a list of the various joints employed for connecting together the separate lengths of cast iron pipes, and state their respective advantages.

Ans. In England and on the continent of Europe a great variety of joints for cast iron pipe have been devised and to a certain extent used. These include movable flange joints, clip joints, collar joints, screwed joints, bell and spigot joints in which the joint is made by means of a vulcanized rubber ring, and bored and turned joints as well as the fixed flange joints, bell and spigot joints of lead or cement, and ball and socket joints, which are practically the only joints used in this country, and are therefore the only ones considered in this answer.

Flange joints allow of the easy removal, when desired, of any one of the various pieces of pipe. They are, however,

very rigid, and their use is confined to lines of pipe above ground and at the works. On long, straight lines of flanged pipe one or more expansion joints should be provided to relieve the pipe of the strains that would be thrown upon it by its expansion and contraction under the influence of changes in temperature.

Ball and socket joints are expensive and are used only for lines where great flexibility is necessary, as in laying pipes under water.

For ordinary street main work, bell and spigot joints are used almost exclusively in this country. The joints are made sometimes with lead and sometimes with cement.

The lead joint, while as a rule more expensive than the cement joint, has the advantages of being more easily cut out, more easily repaired, and of allowing the pipes to expand and contract, under the influence of changes of temperature, without fracture, since the lengths can move in the joints.

On the other hand, the cement joint is cheaper and more rigid than the lead joint, and when properly made will remain tight under almost any possible conditions. A line of pipe laid with cement joints if exposed to changes of temperature will not show small leaks at the joints as will one laid with lead joints, but, on the other hand, it is more liable to fracture.

In most instances the choice between lead and cement joints is determined by the relative disadvantages of a number of small leaks and of one large leak, which latter will be more quickly detected, but because of allowing more gas to leak in a given time, is more liable to cause damage. In one large city lead joints are used in the heart of the city, where gas from a leak might collect in closed spaces, and cement joints are used in the outskirts, where the conditions are more favorable for the gas from a leak passing away into the open air without forming an explosive mixture in a confined space. A frequent practice is to lay the pipes with cement joints, but at intervals of from six to twelve lengths to put in a lead joint to act as an expansion joint—the location being marked and noted, and the lead joint occasionally examined. This should make cement

jointed pipe practically as free from liability to fracture as lead jointed lines. (Trustees.)

EIGHTH SERIES OF QUESTIONS—SECTION OF 1909——PRACTICAL CLASS—TRUSTEES GAS EDUCATIONAL FUND.

1. What precautions should be taken to protect oil storage tanks from fire, and to prevent the oil from spreading over surrounding territory in event of fire?

2. Give a description, illustrated by sketches, of a simple non-automatic street main governor and expain its action.

3. What is the object of the process of washing, or scrubbing, to which coal gas is subjected during its manufacture, and how and under what conditions of temperature should it be carried on to produce the best results?

4. What are the products of the complete combustion of each of the following substances?

Carbon	C
Carbon Monoxide	CO
Hydrogen	H_2
Benzene	C_6H_6
Methane, or Marsh Gas	CH_4
Ethylene, or Olefiant Gas	C_2H_4
Ethane	C_2H_6
Acetylene	C_2H_2

Give in each case the weight of each of the products produced by the combustion of one pound of the substance, and in the case of gases give also the volume of each of the products produced by the combustion of one cubic foot of the substance.

5. What is the meaning of the term "specific heat" as used in the statement, "the specific heat of nitrogen is 0.244"?

6. A station meter passed a certain quantity of gas at a temperature of 46° F., and registered 22,000 cu. ft. What would the volume have been if the temperature had been the standard one of 60° F? Give your calculations.

7. What are the respective arguments in favor of the use of lime and of oxide of iron for the purification of illuminating gas?

8. Describe the testing of a consumer's meter, giving all the precautions to be observed to secure accurate results.

9. When existing services have to be connected up to a new main, as is the case when a small main is replaced by a larger one, how would you make the closing joint between the new and the existing work? Give the reasons for your answer.

10. What should be done to determine each year whether the street mains in a gas company's district are sufficiently large to satisfactorily supply the demand for gas over the whole district?

11. What is indicated by an abnormal increase in the pressure at the outlet of the exhauster, and how would you proceed to determine the exact point at which the cause producing this increase of pressure is located?

12. Describe the proper method of preparing and putting in a cement and broken stone concrete for foundations in dry or nearly dry earth.

ANSWERS TO EIGHTH SERIES OF QUESTIONS—SECTION OF 1909—PRACTICAL CLASS—TRUSTEES GAS EDUCATIONAL FUND.

An answer to a problem similar to the one in question No. 6 has already been given on page 77 of Vol. II of the Proceedings. Answers to questions Nos. 4, 7, 8 and 12 have also been published in the previous volumes, and will be found as follows:

No. 4, Vol. I, page 293.
No. 7, Vol. II, page 150.
No. 8, Vol. II, page 135.
No. 12, Vol. I, page 102.

The answers to the other questions are as follows:

1. What precautions should be taken to protect oil storage tanks from fire, and to prevent the oil from spreading over surrounding territory in event of fire?

Ans. "To protect oil storage tanks from fire, they should be erected as far as convenient from any possible source of fire. They should not be surrounded by combustible material. As a further protection, the top of the tank may be made, as is often the practice, in the form of a pan, which can be kept full of water, protecting the tank from sparks, and keeping the oil cooler than it would be if the sun were allowed to shine directly on the metal. Tanks may be erected in fire-proof buildings, and however erected and of whatever material, they should be, for the protection of surrounding property, encircled with a sufficiently heavy wall of earth or masonry to prevent the escape of the oil, in case a rupture of the metal of the tank should occur."

2. Give a description, illustrated by sketches, of a simple non-automatic street main governor and explain its action.

Ans. As usually made, simple non-automatic street main governors consist essentially of a cast iron valve box, inserted in the main leading from the outlet of the holders to the street mains containing a double, balanced valve; a cast iron water tank placed vertically over the valve box, but not necessarily directly upon it; a bell made of sheet iron and similar to a small gas holder working in the tank, this bell being fastened to the valve rod so that as it rises or falls the valve moves with it; and a small gas pipe connecting the outlet from the valve box with the interior of the bell, which is thus always supplied with gas under outlet pressure. The form of these various parts and the manner in which they are combined vary in different styles of governors. Thus the valve may be conical, parabolic or cylindrical. When the latter form is used the side of the cylinder is pierced with V shaped openings placed with the points down. Whatever its shape it should be made so that

the upward and downward pressures exerted upon it by the gas will be equal and so neutralize each other. The bell is made sometimes with an air chamber large enough to support by its buoyancy the combined weight of the valve, rod and bell, and sometimes without such an air chamber. In the latter case the weight of the bell, valve and rod is counterbalanced by removable iron weights carried on rods suitably attached to either levers or chains fastened to the bell.

In the governor illustrated on the cut the valve is made cylindrical and is balanced by being made double and being set so that the pressure of the gas on both the inlet and the outlet sides of the governor is exerted upward on one valve and downward on the other. The bell is provided with an air chamber of such size that, when the bell is in place in the tank and fastened to the valve rod and the tank is filled with water, the buoyancy of the bell will be sufficient to raise the valve and keep it pressed tightly against the seats. The valve rod after being fastened to the top of the bell is continued above it through a hole in a bracket bolted to the top of the tank, and is thus guided at the top. The same style of governor is made without this guide for the valve rod at the top, but in that case the bell must be guided by means of rollers fastened to the bottom and running in grooves in the sides of the water tank. Gas from the outlet side of the governor is brought under the bell by means of the small pipe shown on the cut, which is connected into the main on the outlet of the governor and passes up through the bottom of the water tank to a point above the water line inside the bell. This pipe is provided with a stop cock. Between the valve box and the water tank is inserted a piece of flanged pipe, the length of which is made to suit local conditions, it being customary to have the valve placed in the basement or cellar under the governor room, while the tank and bell are on the ground floor.

When the governor is to be put into action, water is run into the air chamber at the bottom of the bell, through the pipe shown on the cut as connected into the air chamber and brought up through the top of the bell, until the weight so added is sufficient to prevent the bell from being in equilibrium unless

the pressure inside of it is equal to the minimum pressure that it is desired to carry at the outlet of the governor. The effect of the addition of this weight to the bell is to cause it to fall

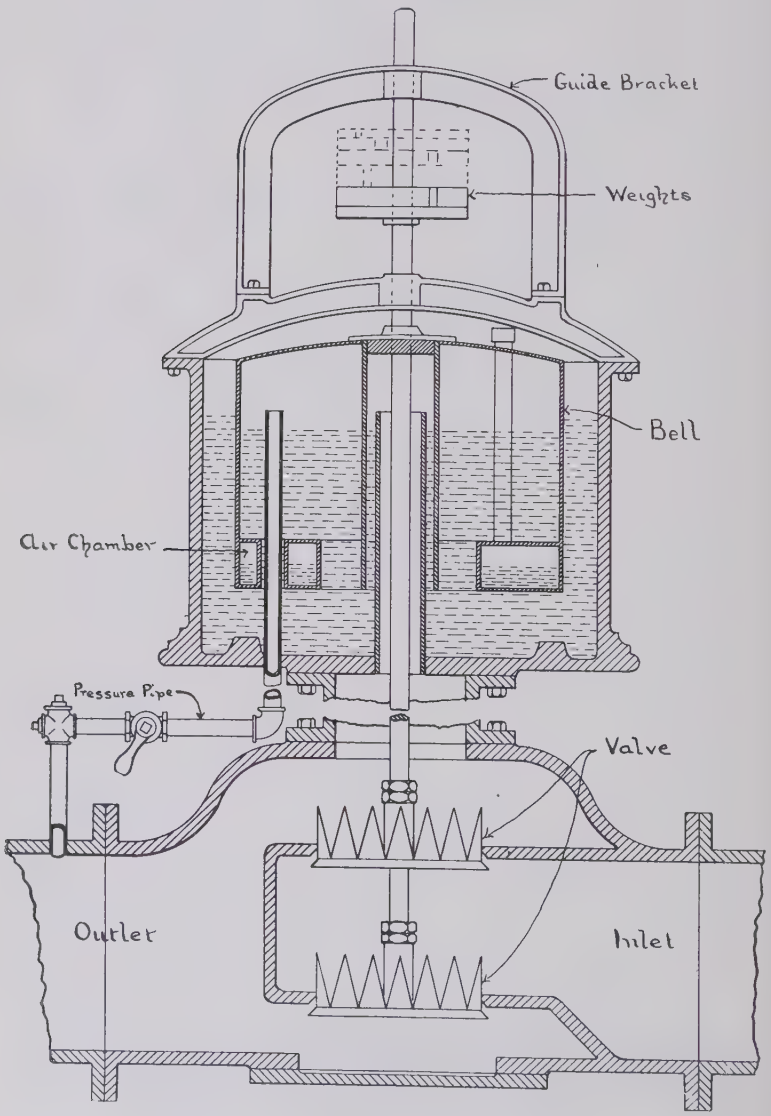

NON-AUTOMATIC STREET MAIN GOVERNOR.

and so open the valve until the opening is large enough to permit gas to pass through in sufficient volume to maintain this minimum pressure on the outlet side of the valve and therefore under the bell. When it is desired to carry a higher pressure on the outlet the bell is loaded with one or more iron weights, placed on a shelf fastened to the continuation of the valve rod above the top of the bell. This extra load increases the pressure required to keep the bell in equilibrium and so causes it to again fall until the valve opening is increased sufficiently to supply gas rapidly enough to maintain on the outlet, and consequently under the bell, the higher pressure for which the governor is set. Any pressure for which it is thus set will be maintained at its outlet in spite of any variations that may occur in the demand for gas. If the demand increases, the first effect is to cause the outlet pressure to fall slightly, and this fall being transmitted to the gas under the bell, the pressure there will no longer be sufficient to maintain the equilibrium. The bell will therefore fall and the valve open until the pressure is brought back to the proper point. If the demand decreases the first effect is to increase the outlet pressure and therefore the pressure under the bell. By this increase it is again thrown out of equilibrium and caused to rise, owing to the pressure being greater than is required to balance the weight with which it is loaded, and this rising of the bell closes the valve and thus reduces the pressure to the proper point.

When a change in the pressure is desired, the amount of weight on the governor must be varied to suit, being increased to produce a higher pressure and decreased to give a lower pressure. (Trustees.)

3. What is the object of the process of washing, or scrubbing, to which coal gas is subjected during its manufacture, and how and under what conditions of temperature should it be carried on to produce the best results?

Ans. The primary object of the process of washing or scrubbing coal gas is the removal from the gas of the ammonia which it contains. But, in all except the smallest works, there is a secondary object to be sought which is as important

as the primary object, namely, to carry on the process in such a way that the ammonia be made to combine with, and remove from the gas, the greatest possible amount of carbon dioxide and sulphuretted hydrogen. The attainment of this object relieves the purifiers of much work that would otherwise be thrown upon them, whether they are used to remove both the impurities named or only the sulphuretted hydrogen. In the latter case it is especially important that the ammonia be made to combine to as great an extent as possible with the carbon dioxide, since in this case it is only by such combination that any of this impurity will be removed from the gas.

Water, having the property of absorbing ammonia in a volume large as compared with its own volume, and being cheap, is universally used in washers and scrubbers. As the volume of ammonia which a given volume of water can absorb decreases very rapidly with rise in temperature, it is necessary that the temperature of the gas be kept low during the process, a temperature of 60° being that at which it is usually carried on. To secure thorough saturation of the water and at the same time the complete removal of ammonia from the gas, it is necessary that there should be intimate contact between the water and the gas and that they should flow through the washers and scrubbers in opposite directions in order that the clean water will meet nearly clean gas, and thus remove from it the last traces of ammonia, while the weak liquor first formed will, as it flows on, come in contact with the gas containing more and more ammonia and thus become more and more saturated.

To secure the complete saturation of the ammonia with carbon dioxide and sulphuretted hydrogen, it is necessary to wash or scrub the gas with the ammoniacal liquor deposited in the hydraulic main and condensers. This liquor, owing to its having been formed at a comparatively high temperature, contains a large proportion of uncombined ammonia, which will combine with carbon dioxide and sulphuretted hydrogen when brought into intimate contact with gas containing these substances, after it has been cooled. The hydraulic main and condenser liquor is used in the washer or scrubber which the

gas first enters after leaving the condensers, or, if only a single scrubber of the rotary mechanical type is used, this liquor may be run in at about the middle compartment and allowed to flow towards the gas inlet end, clean water being run in at the gas outlet end and the resulting liquor allowed to go through all the compartments, being mixed with the hydraulic main liquor after passing the point at which the latter is admitted. (Trustees.)

5. What is the meaning of the term "specific heat" as used in the statement, "the specific heat of nitrogen is 0.244"?

Ans. "Specific heat" as used in the statement quoted in the question denotes the amount of heat expressed in heat units which is required to raise by 1° the temperature of unit weight of a substance. Since a heat unit is the amount of heat required to raise by 1° the temperature of unit weight of water, the specific heat of a substance is the ratio between the amount of heat needed to raise by 1° the temperature of unit weight of the substance and the amount of heat required to raise by 1° the temperature of unit weight of water. If the unit of weight is the pound avoirdupois and the temperature is measured in Fahrenheit degrees the specific heat is expressed in British thermal units, while if the unit of weight is the kilogramme and the temperature is measured in Centigrade degrees the specific heat is expressed in calories. It is expressed by the same number in each case. More heat is required to raise the temperature of unit weight of water a given amount than is needed to raise by the same amount the temperature of unit weight of any other substance, with the exception of hydrogen; therefore, with this exception, the specific heats of all substances are less than 1.

The amount of heat required to raise by 1° the temperature of a body which is free to expand, or, as it is said, is kept under constant pressure, is not the same as the amount required to produce the same change in temperature in the body if it is kept at a constant volume. For every substance there are, therefore, two values for the specific heat, one for constant

pressure and one for constant volume. There is also what is termed specific heat by volume, which is the amount of heat, expressed in heat units, required to raise by 1^0 the temperature of unit volume of a substance. But when the term specific heat is used without any qualification, as in the statement "the specific heat of nitrogen is 0.244" and in the first paragraph of this answer, it refers to specific heat by weight and at constant pressure. (Trustees.)

9. Where existing services have to be connected up to a new main, as is the case when a small main is replaced by a larger one, how would you make the closing joint between the new and the existing work? Give the reasons for your answer.

Ans. Except in abnormal cases, the final joint to be made in connecting existing service pipes to new mains must be one that can be made without turning either of the runs of the service pipe which are to be connected together. There are various kinds of such joints used with wrought iron or steel pipe, those most commonly employed being unions, either screw or flange, right and left fittings and long screws or running threads. Of these, the last named are best for use under the conditions met with in connecting up existing service pipes to a newly laid main.

Right and left fittings are out of the question entirely apart from the inconvenience of having to carry and use two sets of dies and taps, since their use involves the drawing together of two pieces of pipe that must at the start have been separated by an inch or more of space. This cannot be done in the class of work under consideration without throwing on some part of the service, and probably also on the main, a strain that is too heavy to be borne without an ultimate break and resultant leak.

The same objection holds, although to a less extent, with unions, since it is almost impossible to make the work come so exact that the two faces of the union will press against each other without being drawn up by the screwing of the collar on the nipple. Unions in which the joint is made by a washer are

more liable to become leaky than long screws, and ground unions are more expensive and make no better job than long screws.

The long screw is cheap, makes a joint that is as tight and as permanently tight as any of the other joints on the service pipe, and its use enables the connection to be made readily and quickly without throwing any strain on the service or main. It will go together even though the pipe is cut a little short, and since the coupling feeds off of one thread at the same rate that it feeds on the other, the two ends even if separated by a small space, are not drawn together and no strain is produced when the joint is made up, and this property of enabling the work to be done without causing any strain is not possessed to as great a degree by any other simple and cheap joint. (Trustees.)

10. What should be done to determine each year whether the street mains in a gas company's district are sufficiently large to satisfactorily supply the demand for gas over the whole district?

Ans. The best and surest way in which to ascertain whether or not the street mains of any gas company are large enough to give a satisfactory supply of gas in all parts of its district is to take, and record, each year readings of the pressures existing at a sufficient number of points to thoroughly cover the district, these observations being taken during the hour of heaviest consumption on successive days in the early part of December. If the district is abnormal in not having the heaviest consumption in December, the pressures should be taken during the month in which the largest consumption does occur.

The pressures may be taken either by single readings of a U gauge moved from point to point, or by means of recording gauges provided in sufficient number to allow one to be set at each of the points to be covered by the observations of any one day. The use of recording gauges kept in action for several hours each day gives a means of determining absolutely the lowest pressure existing at any test spot during the hours of heaviest consumption, but it involves a fairly large outlay for

gauges and quite a little labor in handling them, while with the U gauge the work can be done at comparatively small expense, provided there are lamp posts connected up to the mains in all parts of the district. If there are no such posts, nor any special pipes arranged so as to be easily accessible on the street, the pressures have to be taken by attaching the gauges to consumers' services at some point between the main and the meter, and it is necessary to use recording gauges.

When the U gauge is used it is essential that the observations made on any one day be taken only during a period when the rate of consumption is practically steady and at its maximum. The length of this period and the time of day at which it occurs can be determined by means of pressure records for the whole twenty-four hours, taken with recording gauges placed for a week at each one of several points carefully selected with a view to obtaining average results for the whole district. The period best suited for taking the observations with the U gauge will be the hour or half-hour during which these records show the lowest pressure, the longer period being taken if there is little variation in the pressure during that length of time and the shorter one if the pressure does not remain steady during a longer time.

Test points having been selected so as to cover the entire territory from the works to the outskirts in every direction, and the proper time for taking the observations determined, the territory is divided into districts, each of which contains only the number of test points that can be handled during the allotted time. These districts are then covered one after another and as nearly as possible on successive days.

The following description of a system employed where special pressure pipes are installed and recording gauges used is quoted from the answer of a member of the class:

"Pressure tests are made at least once a year of the entire system. In order to do this systematically there have been inserted at all important junctures of the main lines test pipes in the street with iron boxes over them, similar to drip pipes, so it is convenient to remove a three-quarter inch plug and at-

tach the gauge, a watchman being detailed at each gauge during the time it is set.

"The city is divided into districts which overlap each other to the extent of one or two locations. There are nine gauges set at a time, two of which will be on the same test pipes as were taken the previous day. This is repeated until the whole city has been covered. The lapping of the districts is to make comparisons of successive days as the consumption varies from one day to another.

"These tests are made at the time of maximum consumption, which is considered to be between 5:45 p. m. and 6:00 p. m. during November and December.

"The gauges used are the 'Bristol Recording' type and are set from about 4:00 p. m. to 8:00 p. m. each day until the whole city is covered." (Trustees.)

11. What is indicated by an abnormal increase in the pressure at the outlet of the exhauster, and how would you proceed to determine the exact point at which the cause producing this increase in pressure is located?

Ans. An abnormal increase in the pressure at the outlet of the exhauster in a gas works indicates a partial blocking up of the gas way at some point in the pipes and apparatus lying between the exhauster and the holder. When any such increase of pressure is observed, the location of the obstruction should be determined at once in order that measures may be taken to ensure its removal before it becomes great enough to interfere seriously with the operation of the works. If the plant is provided with pressure gauges on the inlet and outlet of each piece of apparatus, any obstruction of the gas way can be readily located by an inspection of these gauges, since the first gauge beyond the obstruction will show a normal pressure, and therefore it is certain that the trouble will be found in the piece of pipe or apparatus where the gauge at the inlet end shows an abnormal pressure and the gauge at the outlet end shows a normal pressure.

If there is not a pressure gauge at each end of each piece of apparatus, the obstruction may perhaps be located by by-

passing each piece in turn, noting the change in pressure in each case, until the piece of apparatus throwing the abnormal pressure is found. However, if the stoppage is in the pipes between the outlet of one by-pass and the inlet of the next this method will not locate it, and in the absence of gauges fixed as above it will be necessary to attach a gauge at each end of each piece of apparatus and note the pressures existing, taking them in succession one after another, until the two consecutive points between which the abnormal difference in pressure occurs are found.

When this has been done the piece of pipe or apparatus that is at fault should be cleaned out as soon as possible. (Trustees.)

TWELFTH SERIES OF QUESTIONS—SECTION OF 1908—PRACTICAL CLASS—TRUSTEES GAS EDUCATIONAL FUND.

1. Many buildings around gas works have roofs covered with slate laid directly upon steel purlins. In such cases how are the slates fastened to the purlins?

2. Give a description, illustrated with sketches, of the action of a single cylinder steam engine, paying especial attention to the setting and action of the eccentric and slide valve.

3. What are the advantages derived from heating the oil used in a carburetted water gas apparatus before it is admitted to the carburetter?

4. How much grate surface should be allowed in setting a horizontal return tubular boiler 5 ft. in diameter and 18 ft. long and containing eighty-two 3 in. tubes? Consider that gas coke will be the fuel used and give the reasons for your answer.

5. Give a description of some method of revivifying iron oxide without removing it from the purifying boxes, and state the precautions that should be observed to prevent the oxide from firing during the operation.

6. What is meant by the tension of vapor? By maximum vapor tension?

7. What makes spent oxide valuable?

8. How do sharp turns in a pipe affect the amount of gas that it will deliver?

9. Give a description of a "Complaint Meter" and state the purposes for which it is useful.

10. A gas water heater has an efficiency of 70%. It burns 48 cu. ft. per hour of a gas having a calorific value, with the water formed by the combustion of the hydrogen and hydrocarbons passing off as vapor at a temperature of 212° F., of 570 B.t.u. Assuming that a gallon of water weighs 8.33 lb., how many gallons per minute can it heat from a temperature of 54° F. to one of 140° F? Give your calculations.

11. With gas selling at $1.15 per 1,000 cubic feet and electric current at 12 cents per kilowatt, what are the comparative costs of one candle power per hour furnished by an incandescent gas light and an incandescent electric light respectively, the cost of renewals being left out in both cases?

12. What are the arguments in favor of the use of gas engines in place of steam engines, especially for small sizes, that is, up to 15 or 20 H.P.?

Answers to Twelfth Series of Questions—Section of 1908—Practical Class—Trustees Gas Educational Fund.

An answer to a problem similar to the one in question No. 11 has been given on page 101 of Vol. II of the Proceedings. Answers to questions Nos. 3 and 6 have also been published in a previous volume and will be found as follows:

No. 3, Vol. I, page 303.
No. 6, Vol. I, page 313.

The answers to the other questions are as follows:

1. Many buildings around gas works have roofs covered with slate laid directly upon steel purlins. In such cases how are the slates fastened to the purlins?

Ans. The most approved method of fastening slate directly

to iron or steel purlins is by means of lead nails put through holes made in the slate and bent around the purlin, as shown on the accompanying sketch. The only objection to this method

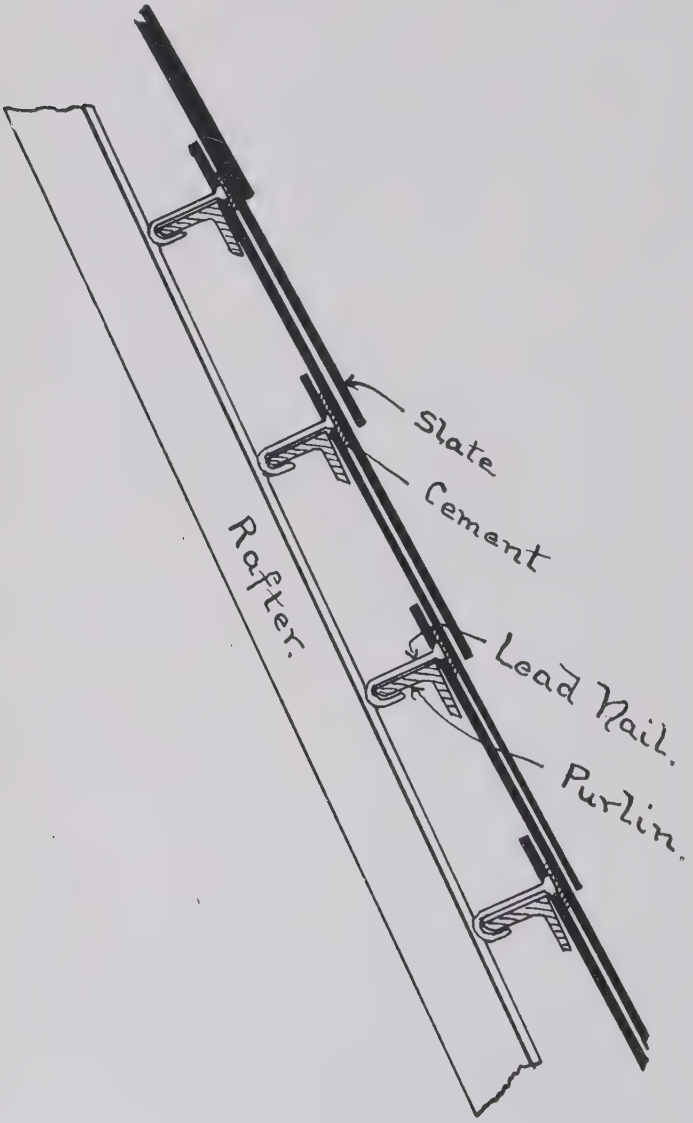

is that if the slate is at all free to move under the influence of wind the lead is not sufficiently rigid to prevent the nails from being straightened out when the roof is exposed to high winds, thus destroying their hold on the purlins and allowing the slates to be blown off. All motion of the slates can, however, be prevented by the use of an elastic cement between them, applied as is shown on the sketch.

Roofs constructed in this manner are perfectly secure in the most windy localities, and while the first cost is slightly higher than when the cement is not used, this is more than made up by the freedom from the necessity for repairs which is secured by the first outlay. It is therefore advisable to use cement even where the wind is not apt to be high.

Galvanized iron wire and copper wire are also used in much the same way as lead, but are not as good as lead used as above. (Trustees.)

2. Give a description, illustrated with sketches, of the action of a single cylinder steam engine, paying especial attention to the setting and action of the eccentric and slide valve.

Ans. By referring to the diagram on the cut, the action of a single cylinder steam engine can be readily understood. These diagrams show in outline the cylinder, piston, ports, crank, eccentric and slide valve, P being the piston, SS the steam ports, E the exhaust port, C the crank, Ec the eccentric and V the slide valve.

In Fig. 1 the piston is shown in the position occupied at the completion of a stroke from right to left. The slide valve is so situated with reference to the ports that steam is being admitted through the left hand steam port to that portion of the cylinder on the left of the piston, while that on the right is open to the exhaust through the right hand steam port, the exhaust cavity of the valve and the exhaust port. The entering steam therefore forces the piston to the right, and with it moves the piston rod, connecting rod, crank and shaft, from which latter, motion is imparted to the valve through the eccentric, eccentric rod and valve stem.

The valve at first travels in the same direction as the piston,

increasing the amount of opening for admission of steam, until, when the piston has traversed about one-quarter of its stroke, the full width of port is opened, as shown in Fig. 2. The direction of the motion of the valve then changes, and it travels in the opposite direction to the piston, gradually de-

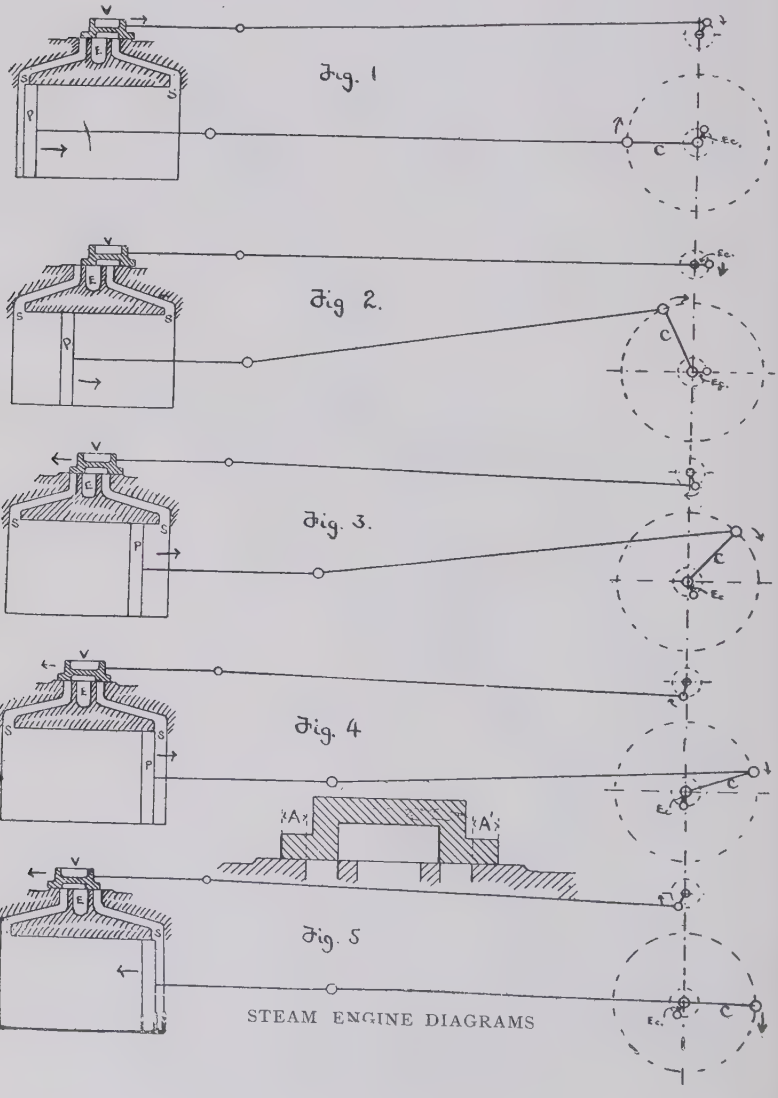

creasing the opening for steam, until at the position shown in Fig. 3, the admission of steam is entirely cut off. The steam already in the left hand end of the cylinder continues to drive the piston forward, as its pressure is greater than the pressure in the right hand end, which is still open to the exhaust. From this point of the stroke the steam expands, still doing work, until the continued motion of the valve in a direction opposite to that of the piston again changes the conditions by closing the right hand steam port and putting the left hand end into communication with the exhaust port as shown in Fig. 4. As soon as this occurs, compression begins to take place on the right hand side of the piston, and the pressure on the left is lowered by the escape of the expanded steam to the air through the exhaust, the combined action gradually checking the motion of the piston now maintained solely by the inertia of the moving parts. Finally, just before the piston comes to a stop at the end of the stroke, the continued travel of the valve to the left begins to open the right hand steam port, and steam is admitted to the right hand end of the cylinder in readiness for the return stroke from right to left. Fig. 5 shows the relative positions and direction of motion of valve and piston at the beginning of this stroke, during which the sequence of events is the same as that described above, the directions being reversed and left substituted for right and vice versa.

Before considering the setting of eccentric and valve we will define the terms used in connection with these parts of an engine. In the section of slide valve and the valve seat given in the cut, the valve is shown in the position it occupies at half travel. The length A and A′ by which it overlaps each steam port externally, is called the "outside lap," or simply " the lap." If the valves overlap the port on the exhaust side, the length of such lap is called "inside lap." The valve shown has no inside lap. "Outside lead" is the width of the opening of the steam port for the admission of steam at the beginning of the stroke. "Inside lead" is the width of the opening of the steam port on the exhaust side at the beginning of the stroke. "Angular advance," or the advance

of the eccentric, is the angle formed by the centre line of the eccentric at half travel, and the position of the same line when the piston is at the commencement of its stroke. "Linear advance," or the advance of the valve, is the distance that the valve has traveled beyond the middle position when the piston is at the commencement of its stroke. The "travel" of the valve is the distance passed through in going from one extreme position to the other.

The distribution of steam during the stroke of the piston, that is, the points at which admission begins and cut-off takes place, and at which compression and exhaust commence, is regulated by varying the lap, lead and travel of the valve. For the class of engine we are considering, this distribution, once determined for any particular engine, cannot be varied. Having been so determined, the three elements named above are adjusted to give the required result, and the valve and eccentric designed accordingly.

To set valve and eccentric, the engine is set exactly on the centre. To do this the brasses are set up until there is no looseness or play in the bearings. A line is "scribed" on the guides and the cross-head in such a manner as to permit of their being brought back at any time to precisely the same relative position, but with the crank the same distance above and below the centre. Marks are also made on the crank disc, or the wheel, so that the arc traversed by a point on either, during the motion of the cross-head from the marked position back to it again, can be exactly measured. This arc is then bisected, and the wheel or disc being moved back through the half-arc, the engine is on the centre.

The eccentric is then set in position at the determined angle with the crank, and the valve secured on the stem with the determined "lead." Turing the wheel a half revolution to bring the engine on the opposite centre, the "lead" is again measured, and if not exactly the same as at the other end, the valve is readjusted on its stem until the "lead" is equal at both ends. This done, the eccentric is moved until the amount of the "lead" is right as determined, and the setting is complete. (Trustees.)

4. How much grate surface should be allowed in setting a horizontal return tubular boiler 5 ft. in diameter and 18 ft. long and containing eighty-two 3 in. tubes? Consider that gas coke will be the fuel used and give the reasons for your answer.

Ans. Since the rate at which the fuel can be burned, and consequently the rate at which steam can be made in a boiler, depends upon the amount of grate surface, this surface should be as large as is consistent with the efficient utilization of the heat produced in the furnace. To utilize the heat efficiently it is necessary to have ample heating surface in proportion to the grate surface, so that the products of combustion will come in contact with sufficient heating surface to be well cooled down before they escape to the chimney. The area of grate surface should therefore bear a certain relation to that of the heating surface, and it has been found by experience that this relation varies with different classes of fuel. With fuels containing a comparatively large amount of volatile matter, which burn with a long flame, it is necessary, in order to secure the same efficiency, to have more heating surface per square foot of grate surface than is required with fuels which contain practically no volatile matter and so burn either with no flame or with a very short one. From the information gained from the results of a great number of boiler tests, Mr. G. H. Barrus states that the best results with bituminous coal are obtained when the heating surface is from 45 to 50 times as large as the grate surface, while with anthracite the ratio need only be 36 to 1. Coke is similar to anthracite in having all the carbon fixed, but since lump coke burns more freely than anthracite it is well to take a higher ratio for the heating surface and make heating surface divided by grate surface equal 40. For coke breeze, which makes a more compact fire that burns less freely, the proportion can be made 30 to 1, the larger grate being necessary to enable the same quantity of fuel to be burned per hour.

The heating surface of the boiler covered by the question can be found by the following rule given in Kent's Mechanical Engineers' Pocket-Book:

"Take the dimensions in inches. Multiply two-thirds of the circumference of the shell by its length; multiply the sum of the circumferences of all the tubes by the common length; to the sum of these products add two-thirds of the area of both tube sheets; from this sum substract twice the combined area of all the tubes; divide the remainder by 144 to obtain the result in square feet."

The boiler being 5 ft. or 60 in. in diameter, two-thirds of the circumference of the shell is equal to $\frac{60\times3.14\times2}{3} = 125.6$ in., and the length of 18 ft. is equal to 216 in. The product of these figures is 27,129.6. The circumference of a 3 in. tube is 9.42 in., so the sum of the circumference of 82 tubes is $9.42\times82 = 772.44$, and $772.44\times216 = 166,847.04$. $27,129.6+166,847.04 = 193,976.64$. The area of the tube sheet, which is 60 in. in diameter, is 2,817.4 square inches, and of the two sheets twice this, or 5,634.8. Two-thirds of 5,634.8 is 3,756.5, and $193,976.64+3,756.5 = 197,733.14$. The area of a 3-in. tube is 7.07 square inches and twice the area of 82 tubes is equal to 7.07×164, or 1,159.48. $197,733.14 - 1,159.48 = 196,573.66$, and $\frac{196,573.66}{144} = 1,365.09$. That is, the heating surface is 1,365.09 square feet.

Taking the grate surface as 1/40th of the heating surface, we have as the area of the grate for lump coke $\frac{1,365.09}{40} = 34.13$ square feet, while for breeze it would be $\frac{1,365.09}{30} = 45.50$ square feet.

In gas works, where breeze is certain to be used more or less, the grate should be made of the larger area, which can be reduced at any time if lump coke is to be used as a regular thing. (Trustees.)

5. Give a description of some method of revivifying iron oxide without removing it from the purifying boxes, and state

the precautions that should be observed to prevent the oxide from firing during the operation.

Ans. The simplest way of revivifying iron oxide without removing it from the purifying box is to have a pipe connection that can be temporarily attached to the cleaning hole in the bottom of the box. This pipe connection should be long enough to reach outside of the building and should be equipped with a steam jet by means of which air can be drawn down through the oxide and discharged outdoors.

If cleaning holes are not provided in the bottom of the purifiers a permanent wrought iron connection can be made either to the inlet pipe or to the bottom of each purifier, these connections being run together into one pipe arranged with a steam jet and outside discharge as above. Either a valve or a water seal must be provided on each connection, the closing or sealing of which will prevent any gas from leaking from the boxes in use and being blown out into the air. The use of water seals instead of valves on these connections is advised by several engineers who have employed this method of revivification, because they found that the valves became clogged, making it difficult to shut them tightly.

When revivifying oxide in this way the cover should be taken off the box before beginning operations, and the temperature of the oxide should be carefully watched to see that it does not rise too high. If it does get dangerously high it can be reduced by wetting the oxide by means of a hose. The temperatures should be taken at different places in the box by thermometers inserted in pipes driven into the oxide.

Care must be taken to make sure that the lid of the cleaning opening, or the valve on a permanent connection, is tightly closed before gas is turned on to a box again after the oxide in it has been revivified. In case a water seal is used instead of a valve, the seal must be filled with water after the operation is finished. (Trustees.)

7. What makes spent oxide valuable?

Ans. The two substances whose presence in spent oxide

contribute most to its commercial value are Prussian blue and free sulphur, the former being found in oxide which has been used for the purification of coal gas.

The sulphur is removed by treating the material with some solvent for this substance, such as bisulphide of carbon or benzol, until it has been all dissolved, and then evaporating the solution, removing the solvent and leaving the sulphur, which is purified by sublimation.

Prussian blue, ferrocyanide of iron $(Fe(CN)_6)_3(Fe_2)$ is recovered in the form of yellow prussiate of potash $K_4Fe(CN)_6$ by treating the spent oxide with caustic potash. The reaction is expressed by the equation $(Fe(CN)_6)_3(Fe_2)_2 + 12KOH = 3K_4Fe(CN)_6 + 2(Fe_2O_3.3H_2O)$. The yellow prussiate of potash thus formed is crystallized out of the solution resulting from the reaction. (Trustees.)

8. How do sharp turns in a pipe affect the amount of gas that it will deliver?

Ans. Sharp turns in a line of pipe materially increase the friction between the current of gas and the sides of the pipe, and as the amount of gas that any given size pipe will deliver under a given loss in pressure decreases as the friction increases, the greater the number of sharp turns, the less gas will the pipe deliver for the same length and diameter and the same loss in pressure.

On pages 176 and 177 of Volume XVI, "Progressive Age," and on page 679, Volume 66, "American Gas Light Journal," will be found some remarks bearing upon this question of decreased flow due to sharp turns. (Trustees.)

9. Give a description of a "Complaint Meter" and state the purposes for which it is useful

Ans. A "Complaint Meter" is a meter which will record the time and the rate of speed at which gas passes through it, and is essentially an ordinary dry meter equipped with a mechanism for making such a record.

This mechanism is placed in a box built of tin on top of the regular meter case and provided with a hinged cover. It con-

sists of a cylinder caused to revolve by clockwork and a pen point so placed as to make a continuous line upon a record sheet wrapped around the cylinder. The latter is carried upon a threaded shaft which imparts longitudinal motion to the extent of about ¼ in. for each complete revolution and is caused to revolve by a pinion engaging with a gear wheel forming one end of the cylinder. The pinion must be made long enough to engage the wheel over the full length of travel of the cylinder. The clockwork drives it at such a rate as to produce one complete revolution of the cylinder in twelve hours and will run, with one winding, for full seven days. The pen point is carried at the upper end of an arm suspended on a pivot placed above its centre of gravity so that it hangs vertically with its lower end almost touching the shaft carrying the test hand of the meter dial, and is free to swing on the pivot. On the shaft named is fixed a cam which strikes the vertical arm and pushes it to one side once during each revolution of the test hand.

The meter having been substituted for a regular consumer's meter in any location, a record sheet printed and ruled to show the days and hours of a week is placed upon the cylinder, and the clockwork wound up and started with the cylinder in the proper position to have the pen, furnished with a supply of ink, touch the sheet at the point corresponding to the time at which the start is made. As long as no gas passes through the meter the pen will not move and will make a straight line on the sheet, but when gas is being consumed the revolution of the test hand will cause the cam on its shaft to come into contact with the lower end of the arm carrying the pen and push it to one side so that the pen is deflected and makes a short mark on the paper at right angles to the line traced by it when at rest. Since one of these marks is made for each revolution of the test hand, each one indicates the passage of the amount of gas corresponding to one revolution of this hand (in 5-light meters this is 2 cu. ft.), and the rate at which gas is being consumed at any time is determined by multiplying the number of marks made in a given interval by the quantity represented by each one.

The charts obtained from a meter of this kind show clearly

at what hours and for each interval of time exactly the rate at which gas passes through the meter, and makes it possible to give to the consumer information that in a great majority of cases will satisfy him of the correctness of bills about which he has complained, and also post him as to small leakages and the consumption of gas at times and for purposes about which he knows nothing. They can also be used to determine the maximum demand of any given consumer, or, by setting one in each house along a certain piece of main, the total maximum demand on that piece. The latter information is valuable as giving data from which to calculate the size of pipe that should be used in laying a new main under similar conditions. (Trustees.)

10. A gas water heater has an efficiency of 70%. It burns 48 cu. ft. per hour of a gas having a calorific value, with the water formed by the combustion of the hydrogen and hydrocarbons passing off as vapor at a temperature of 212° F., of 570 B.t.u. Assuming that a gallon of water weighs 8.33 lb., how many gallons per minute can it heat from a temperature of 54° F. to one of 140° F? Give your calculations.

Ans. The total number of B.t.u. produced in one minute by the combustion of the gas under the assumed conditions will be $570 \times 48 = 27{,}360$, but since the efficiency of the water heater is 70%, the number of B.t.u. available for heating the water will only be $27{,}360 \times 0.70 = 19{,}152$ per hour, which divided by 60 gives 319.2 per minute.

A B.t.u. being the amount of heat required to raise the temperature of one pound of water 1° F., there will be required to raise the temperature of one gallon, weighing 8.33 lb., from 54° F. to 140° F. $8.33 \times (140 - 54) = 8.33 \times 86 = 716.38$ B.t.u.

Then

$$\frac{319.2 \text{ (whole number of heat units available)}}{716.38 \text{ (number of heat units required per gallon of water)}} = 0.44$$

equals the number of gallons of water the temperature of which can be raised the required amount in a minute. (Trustees.)

12. What are the arguments in favor of the use of gas engines in place of steam engines, especially for small sizes, that is, up to 15 or 20 H. P.?

Ans. Ordinarily the cost of a gas engine of the sizes specified is about equal to the combined cost of a steam engine and boiler of the same capacity, and except in cases where a boiler plant is already in use for other purposes, and has sufficient margin for the extension required, the investment in a gas engine is no greater than for an equivalent steam plant.

The cost of fuel for a gas engine and for a steam engine is, under ordinary working, approximately the same for the sizes specified. For the steam engine it would be, say, 10 lb. of coal at $4.00 per net ton, equal to 2c. per H. P. hour. For the gas engine it would be 20 cu. ft. of gas at $1.00 per 1,000 cu. ft., equal to 2c. per H. P. hour.

From this point on the advantages and economy are all in favor of the gas engine.

1. No boiler is required, with its mechanical accessories, including coal and ash storage, so that less space is required, thus saving in rental, taxes, insurance and depreciation.

2. There are no coal and ashes to handle, and there is no smoke.

3. There is less fire risk and less danger of explosion.

4. There is no waiting to get up steam, for the gas engine can be started or stopped immediately, and the expense does not begin until it is started, and ends when it is stopped.

5. The wages of firemen and engineer are saved.

6. A gas engine of the sizes specified can generally be located on any floor of a building, thus saving in shafting and belts, and in the loss of power incurred by their use. (Trustees.)

First Series of Questions—Section of 1911—Practical Class—Trustees Gas Educational Fund.

1. What is coal gas? What is water gas? What is carburetted water gas? What is oil gas? What is the average composition of each kind of gas?

2. What are the properties that must be possessed by a coal to fit it for being used for the manufacture of coal gas?

3. Name the chief impurities in crude coal gas as it leaves the retorts, and give the reasons why they should be removed from the gas before it is distributed.

4. Name the useful by-products or residuals produced in addition to the gas in the manufacture of coal gas. In the manufacture of carburetted water gas.

5. Name the principal pieces of apparatus necessary in a coal gas works, and state briefly the function of each.

6. Name the principal pieces of apparatus necessary in a carburetted water gas works, and state briefly the function of each.

7. What does the ordinary U or syphon gauge indicate, and what is the object of its use in gas works?

8. How does a suction pump "draw" water? Why and how does a hot chimney "draw"?

9. Why is it necessary to provide for draining all mains and pipes through which gas travels, and how is this done?

10. What is the commonly accepted theory as to the cause of the luminosity of the flame produced by burning illuminating gas in a luminous burner?

11. Why is the flame of a Bunsen or atmospheric burner non-luminous?

12. What is common lime and what is the raw material used in its manufacture? What is hydraulic lime and what is the raw material used in its manufacture? What is hydraulic cement and what is the raw material used in the manufacture of natural hydraulic cement?

Answers to First Series of Questions—Section of 1911—Practical Class—Trustees Gas Educational Fund.

Answers to all of these questions have been published in a previous volume of the Proceedings, and will be found as follows:

No. 1, Vol. I, page 213.
No. 2, Vol. I, page 214.
No. 3, Vol. I, page 215.
No. 4, Vol. I, page 215.
No. 5, Vol. I, page 216.
No. 6, Vol. I, page 216.
No. 7, Vol. I, page 217.
No. 8, Vol. I, page 218.
No. 9, Vol. I, page 219.
No. 10, Vol. I, page 220.
No. 11, Vol. I, page 221.
No. 12, Vol. I, page 221.

Fifth Series of Questions—Section of 1910—Practical Class—Trustees Gas Educational Fund.

1. In what size pieces is it advisable to have gas-coal when it is charged into the retorts in order to secure the best possible results as to yield of gas per pound of coal and per retort? Give the reasons for your answer.

2. State why it is important to remove the carbon deposited upon the interior of retorts, and describe the method by which it is removed, giving the precautions to be observed to avoid injuring the retort.

3. Give a description, illustrated with sketches, of some arrangement of valves by means of which steam can be passed through the fire in the generator of a carburetted water gas apparatus, either from the bottom up or from the top down, as desired, and explain the advantage of being able to so reverse the direction of travel of the steam.

4. What is meant by the calorific value or heating value of a fuel?

5. At what points in the apparatus should the various tests described in the answer to question No. 7 of the Fourth Series be made for the purpose of determining whether the gas is being properly purified?

6. From the reactions between slaked lime, $Ca(OH)_2$ or $CaO.H_2O$, and carbide dioxide, CO_2, and between ferric oxide, Fe_2O_3. H_2O, and sulphuretted hydrogen, H_2S, as given in the answer to question No. 8 of the Fourth Series, calculate the weight of carbon dioxide that can theoretically be absorbed by one pound of lime and the weight of sulphuretted hydrogen that can theoretically be absorbed by one pound of ferric oxide. Give your calculations.

7. What is a struck bushel? What is a heaped bushel? What is an American gallon? What is an Imperial (English) gallon? Give your answers in cubic inches and cubic feet.

8. Describe the way in which standard candles should be used and handled when making a photometric test to make them yield the proper amount of light when burning at the specified rate of 120 grains per hour.

9. How often, when and in what manner would you inspect house piping to insure its tightness? Give your reasons.

10. Describe the making of a cement joint in 8 inch cast iron hub and spigot pipe, giving approximately the quantity of materials used and the time it would take a man to make the joint. Give a sketch showing a section of the joint with dimensions.

11. How would you determine the size of meter that should be set in any given house?

12. In what part of the masonry or brickwork of a gas works would you use cement mortar instead of lime mortar? Give the reasons for your answer.

Answers to Fifth Series of Questions—Section of 1910—Practical Class—Trustees Gas Educational Fund.

Answers to questions Nos. 4 and 5 have been included in answers already published in the Proceedings, and can be found as follows:

No. 4, Vol. II, page 179.
No. 5, Vol. I, page 273.

Answers to questions Nos. 1, 9 and 12 have also been published in a previous volume, and will be found as follows:

No. 1, Vol. I, page 328.
No. 9, Vol. I, page 231.
No. 12, Vol. I, page 239.

The answers to the other questions are as follows:

2. State why it is important to remove the carbon deposited upon the interior of retorts, and describe the method by which it is removed, giving the precautions to be observed to avoid injuring the retort.

Ans. It is important to remove deposited carbon from the interior of a retort, for if allowed to accumulate it reduces the capacity of the retort, and increases the resistance of the passage of the heat to the coal being distilled.

Carbon is ordinarily removed from retorts by so-called "scurfing" with chisel bars. In order that the chisel bars may be used without damage to the retorts, it is necessary that the carbon be first loosened from the sides of the retorts. This may be accomplished by causing a current of air to pass over the carbon, which partly burns it off, and causes it to lose its hold on the surface of the retorts. The best method of introducing the air is the invention of Mr. G. W. Edge, at one time connected with the Jersey City Gas Works. The operation of Mr. Edge's plan is shown on the accompanying cut.

A is the retort to be scurfed. B is a pipe or tile laid in the bottom of the retort and extending to within two or three feet of the rear end. This may be three or four inches in diameter. E is a steam pipe controlled by the valve F and terminating in

a nozzle G. Steam being turned on at F, and blowing into the pipe B at G, draws with it a large volume of air through the front end of B. This air is blown against the carbon in the

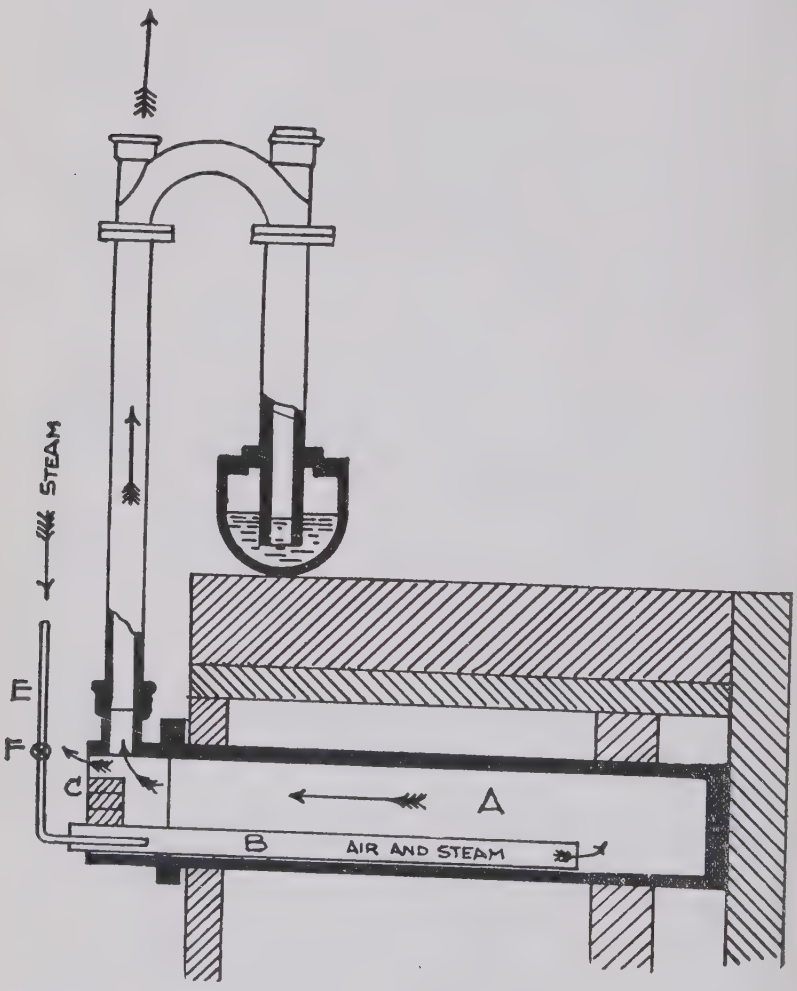

back end of the retort A, and coming forward highly heated, passes over and partially consumes the carbon in the retort, loosening the remainder, so that it may be safely removed

with a chisel bar carefully used. Compressed air may be used to induce the draft instead of steam.

The air may be introduced without the use of steam, the mouth of the retort being closed by a tile wall C, surrounding the pipe or tile B, the open standpipe D making the draft. (Trustees.)

3. Give a description, illustrated with sketches, of some arrangement of valves by means of which steam can be passed through the fire in the generator of a carburetted water gas apparatus, either from the bottom up or from the top down, as desired, and explain the advantage of being able to so reverse the direction of travel of the steam.

Ans. One arrangement of valves to enable the steam to be passed either upwards or downwards through the fire in the generator of a carburetted water-gas apparatus is illustrated on

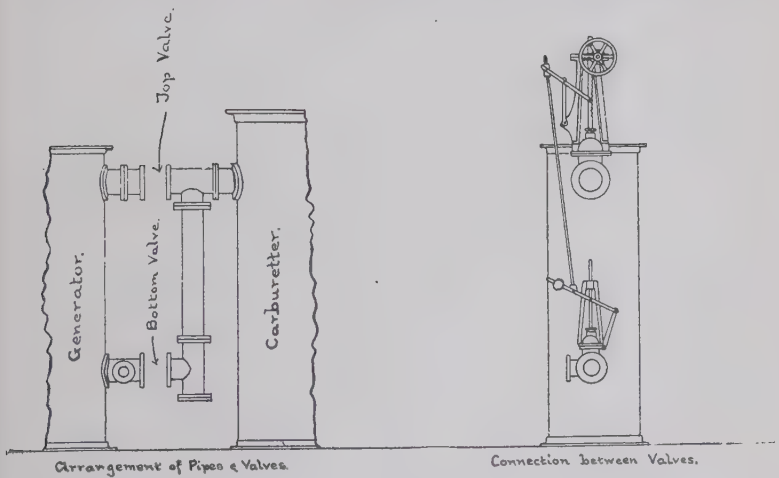

ARRANGEMENT OF VALVES FOR REVERSING THE DIRECTION OF TRAVEL OF THE STEAM IN THE GENERATOR OF A CARBURETTED WATER GAS APPARATUS.

the accompanying cut. It consists of two valves, one in a horizontal pipe leading directly across from an opening in the side of the generator near its top to a corresponding opening in the side of the carburetter, and the other in the horizontal

portion of a pipe leading from an opening in the side of the generator below the level of the grate bars to a connection with the upper pipe between the first valve and the carburetter. These valves are set vertically one above the other, and their stems are so connected by a system of levers and connecting rods, as shown, that one must be closed when the other is open, and vice versa. The upper valve is always open during the blow, and its seat, which is thus exposed to the heat of the blast gases, is made hollow and is kept cool by passing water through it. The lower valve, which is not exposed to any heat during the blow, is a plain double gate valve. The valves are operated by means of a hand wheel keyed to a shaft, on which is a pinion working in a rack on the stem of the upper valve, which is thus raised and lowered directly, motion being transmitted to the lower valve by means of the system of levers and rods.

A steam pipe enters the generator above the top of the fuel bed and one also enters it below the grate bars, each pipe being provided with its own valve. When it is desired to make an "up-run," that is, to pass the steam upwards through the fire, the gas valves are left as they were during the blow, the upper one being open and the lower one closed, and steam is admitted to the generator through the bottom steam pipe. As the only exit open is that at the top of the generator, the steam and the gas produced from it must pass up through the fire and out at the top. To make a "down run," the position of the valves is reversed, the upper one being closed and the lower one open, steam is admitted through the top steam pipe, passes down through the fire, and the gas produced leaves the generator by the lower opening.

The reversal of the direction in which the steam travels through the fire results in an increase in the capacity of the apparatus and in economy in fuel consumption. By the passing over it, during the down-run of the hot gas produced in the upper part of the fire, the coal in the lower part, that has been quenched by the steam during the up-run, is reheated so that the blast can rekindle it and bring it to the proper temperature for the dissociation of steam. In this way the

accumulation on the grate bars of unburnt fuel is prevented, the result being that a deeper bed of active carbon is maintained, the fire does not have to be cleaned so often, and when cleaned there is less unconsumed fuel taken out with the ashes than when the steam travels through the fire only in the upward direction. (Trustees.)

6. From the reactions between slaked lime, $Ca(OH)_2$ or $CaO.H_2O$, and carbon dioxide, CO_2, and between ferric oxide, $Fe_2O_3.H_2O$, and sulphuretted hydrogen, H_2S, as given in the answer to question No. 8 of the Fourth Series, calculate the weight of carbon dioxide that can theoretically be absorbed by one pound of lime and the weight of sulphuretted hydrogen that can theoretically be absorbed by one pound of ferric oxide. Give your calculations.

Ans. The formula according to which slaked lime combines with carbon dioxide is as follows:

$$Ca(OH)_2 + CO_2 = CaCO_3 + H_2O$$

The molecular weight of $Ca(OH)_2$ is 74; the molecular weight of CO_2 is 44. Therefore, 74 parts by weight of $Ca(OH)_2$ combine with 44 parts by weight of CO_2.

Then 1 lb. of slaked lime will combine with 0.5946 lb. of carbon dioxide according to the proportion,

$$74 : 44 : : 1 : x = 0.5946 \text{ lb.}$$

The formulae according to which $Fe_2O_3.H_2O$ combines with H_2S are as follows:

$$Fe_2O_3.H_2O + 3\ H_2S = Fe_2S_3 + 4\ H_2O$$
$$Fe_2O_3.H_2O + 3\ H_2S = 2\ FeS + 4\ H_2O + S$$

The molecular weight of $Fe_2O_3.H_2O$ is 178; 3 times the molecular weight of H_2S is 102.

Then in a manner analogous to that above we have,

$$178 : 102\ 1 : x = 0.573 \text{ lb.}$$ (Trustees.)

7. What is a struck bushel? What is a heaped bushel? What is an American gallon? What is an Imperial (English) gallon? Give your answers in cubic inches and cubic feet.

Ans. The American "struck" bushel is the capacity of a

cylindrical vessel having inside measurements of 18½ in. diameter and 8 in. high = 2,150.42 cubic inches = 1.2444 cubic feet. A "heaped" bushel is such a cylinder surmounted by a cone not more than 6 in. high, and having a base the diameter of the outside of the containing vessel, this outside diameter being 19½ in. It will be seen that the diameter of the cone which forms the "heap" is 1 in. greater than the diameter of the interior of the vessel. This is because the "heap" is supposed to extend to the outside of the vessel used for measuring a bushel. The "heaped" bushel is, therefore, 2,747.7 cubic inches = 1.5901 cubic feet. This is the capacity of a cylinder 18½ in. diameter and 8 in. high, with a cone 19½ in. diameter and 6 in. high. The American Gas Light Association has adopted this bushel, using the "heaped" measure for coke and the "struck" for lime. The "struck" bushel is also used for measuring iron oxide.

An American gallon contains 231 cubic inches, and equals in volume 8.33888 pounds of water at 39.1° F., or maximum density, and 30 in. barometric pressure. It equals 0.1336 cubic feet.

An Imperial (English) gallon contains 277.274 cubic inches and equals in volume 10 pounds of water at a temperature of 62° F. and 30 in. barometric pressure. It equals 0.1604 cubic feet. It therefore equals 1.2 American gallons, and this fact should be borne in mind when reading articles published in the English gas journals. (Trustees.)

8. Describe the way in which standard candles should be used and handled when making a photometric test to make them yield the proper amount of light when burning at the specified rate of 120 grains per hour.

Ans. When candles are used as the standard of light in making a photometric test, the first precaution to be taken is to be certain that the candles are standard candles. It is necessary to depend for this upon the reputation of the manufacturer by whom the candles are made. The long candles, that is, those from 8¼ in. to 9 in. long measured from the shoulder, give, as a rule, more consistent results than do the short ones.

All modern candle balances are made to take two candles at a time, as the use of two flames instead of one throws the position of equal illumination of the two faces of the disc nearer the middle of the bar where slight errors in setting make the least difference in the readings, and also neutralizes any variations from the normal in different parts of the candle.

To prepare a candle for use, the conical tip should be cut off even with the shoulder and the end of the candle so left made perfectly square with the axis, so that the candle will stand vertically when placed on this end. It should then be cut in two as nearly as possible at the middle point between the shoulder and the bottom, and then ½ in. of the sperm should be separated from the top of the lower half and the bottom of the upper half. When separating these pieces care must be taken not to injure the wick, and on this account it is advisable to take each off in one piece, by cutting carefully through the sperm at the right distance from the end of the half candle and pulling off from the wick the piece of sperm so separated. Each of the halves should now be lighted in such a way that the sperm at the base of the wick is melted at the same time that the wick is lighted, so that the flow of sperm up the wick will begin at once. This, by preventing the burning away and charring of the wick, reduces the length of time required by the candles before they settle down to their normal condition and rate of burning. When new candles are first lighted it is well to hold them in a horizontal position and revolve them a few times around the wick as an axis, to melt off some of the sperm and burn off any ragged edge that might be left on the wick, but with candles that have been used before, all that is necessary is to melt the sperm at the base of the wick when lighting them.

The candles should be allowed to burn at least twenty minutes after being lighted before the test is made to render it certain that they have reached their proper condition. The instructions usually given are that they should be lighted at least ten minutes before making a test, so as to allow them to reach the normal rate of burning, but unless they are in the proper condition the light given may vary considerably, even

when the consumption of sperm is normal. The attainment of the proper condition can be determined by the appearance of the wick and the top of the candle. "The wick should appear compactly woven and not bent to an exceeding degree out of the upright," and the tip should glow and remain just within the edge of the flame, while the cup at the top of the candle should be well defined and dry. The proper degree of curvature is shown on Fig. 1. Anything beyond this, such as is

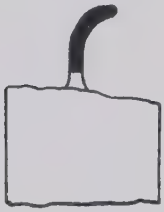

Fig 1.

Fig. 2.

shown on Fig. 2, is wrong, as is also a perfectly straight wick. When the conditions are as noted above, the flame will be smooth on the edge and of good shape and the consumption of sperm will always come within the prescribed limits of 114 and 126 grains per hour. If they are not obtained after the candles have been allowed to burn for a sufficient length of time, the candles are at fault and should not be used. Some candles will not get into good condition until they have been burned for a long time, but a candle that has not reached the proper condition at the end of an hour's burning is probably worthless.

When candles are not in use they should be carefully protected from dust, since if they are allowed to become covered with dust this is drawn into the wick as the sperm melts and interferes with the flow of the sperm to the flame, thus interfering with combustion and preventing the candle from giving the proper amount of light.

The position with reference to the photometer disc and bar of the planes containing the centre lines of the wicks is also

of importance in securing accurate results. The only instructions that are usually given are that the planes of the two wicks should be at right angles to each other, but as pointed out by Mr. John Methven, these planes can occupy a number of positions with reference to the bar and disc while maintaining the

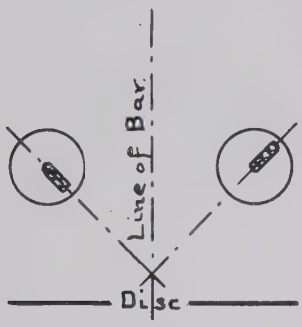

Fig. 3.

required position relative to each other. The proper position is that in which each wick is at an angle of 45° with the line of the bar, one pointing towards both bar and disc and the other pointing away from both bar and disc, as on Fig. 3.

It is also necessary that the candles be burned in a well ventilated space free from drafts, and that the time taken for burning forty grains of sperm be accurately determined, but these are questions concerning the design of the photometer room and the accuracy and sensitiveness of the candle balance which need not be discussed in this connection.

Much information as to the causes that affect the amount of light given by standard candles and the proper way in which to handle them to obtain uniform and accurate results is to be found in a paper on Photometry, by Mr. John Methven, American Gas Light Journal, Dec. 9, 1889, and in an article entitled "The Standard of Light," by Walter Grafton, Journal of Gas Lighting, Etc., Vol. LVII, pages 690, 789 and 889. (Trustees.)

10. Describe the making of a cement joint in 8 inch cast iron hub and spigot pipe, giving approximately the quantity

of materials used and the time it would take a man to make the joint. Give a sketch showing a section of the joint with dimensions.

Ans. Use Portland cement. Natural cements are not uniform in quality, and as a rule, are too quick-setting to permit of their use with safety. In selecting the brand, take a relatively quick-setting Portland. If the cement sets too slowly there is danger of the finished joint being disturbed before setting.

Use the cement neat—no sand.

Use the cement as dry as possible, so that it requires hammering the yarn against it in order to bring the moisture to the surface. When sufficient water is added the cement will still appear crumbly in the pan, and will just retain the impression of the fingers when squeezed in the hand.

The cement should be used immediately after mixing; if it lies unused over five minutes it should be discarded. The cement remaining in the pan should be entirely removed before mixing up any new cement. In mixing cement, first determine the quantity required for one joint, and the quantity of water required for this cement, and then always use the cement and water by measurement.

Use jute yarn, untarred. When the joint is made the yarn and sides of joint may be moist or damp, but should not be wet.

Great care should be taken to have the surface of the bell and spigot making up the joint as clean as possible. If there is any appreciable rust it should be scraped off with a wire brush, and, if necessary, gasoline should be applied to cut out the rust still further, this being done at least a day before the joint is to be made in order to give the gasoline time to evaporate.

The finished joint should consist of one roll of yarn (Fig. 1), of the exact circumference of the pipe, twisted and driven tightly to the bottom of the bell, occupying approximately the space D-E; then a solid mass of cement extending to a point about 1 in. back of the face of the bell occupying the space C-D; then a second roll of yarn occupying the space B-C; then

a facing of cement, occupying the space A-B. Do not make a large fillet extending to the outside diameter of bell. In making the joint after the yarn D-E has been driven in tightly, the cement should be shoved in with the hands, on which are rubber gloves or mitts, preferably the latter, until the whole

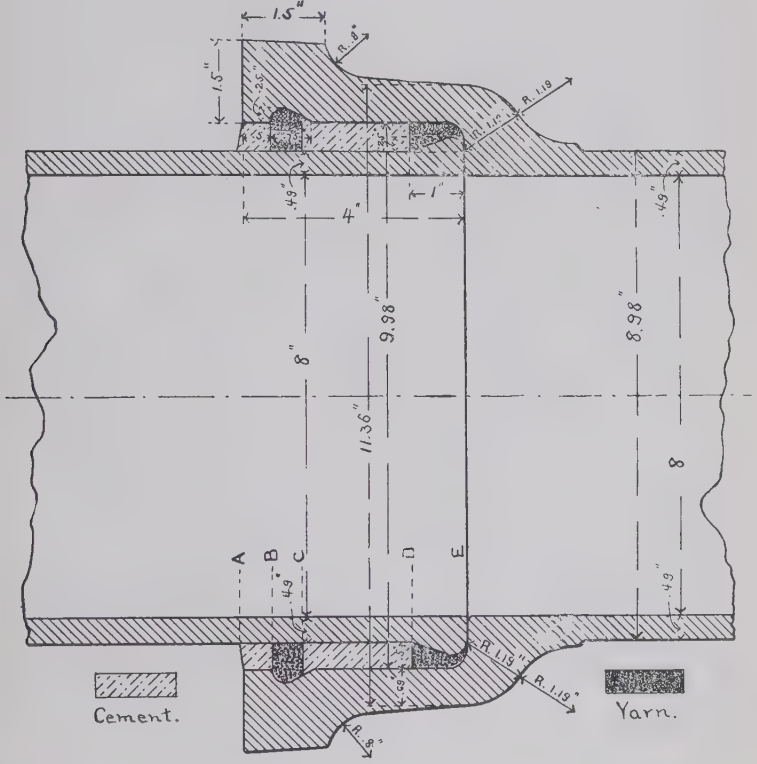

CEMENT JOINT.

space A-D is filled as tightly as it is possible to do so with the hands, being particular to fill the space completely. A wooden pusher, shaped something like a yarning tool, is useful for pushing back the cement after it has been put in with the hands. Sometimes a roll of yarn is used to drive the cement back, the yarn being withdrawn, more cement entered, and the process repeated until the desired quantity has been entered.

The second roll of yarn, B-C, is then put in and driven back by means of a tool similar to a yarning tool, but with a blunter edge, until it is not possible to drive it back any more, which condition is generally obtained when it has reached the position B-C as shown in the figure. The space A-B is then filled with cement. The hard driving of the yarn B-C is very important as being necessary to so compact the cement C-D that there will be no chance for gas to get either through it or between it and the iron.

After the first yarn is in, and before the joint is made, the pipe should be thoroughly bedded and tamped in between the bell holes to prevent any movement of the joint after it is made.

When the joint is made it should be protected from the sun. As few joints as possible should be made in the rain. If work is done on a hot day, and the pipe has been exposed to the sun so that it has become quite heated, it is advisable to cool it off by the application of water to the inside of the bell and the outside of the spigot, care being exercised not to have any water left in the bottom of the joint, the effect of which will be to make the cement too wet.

All joints should be tested before being covered up. The best test is made by connecting gas pressure to the new pipe, through a meter, thus measuring the amount of leakage, if any. If the meter indicates leakage, the hole should be found by using soapsude on the joints. Fire should never be used. The joints should be tested only after the cement has set sufficiently to prevent its being hurt by the soapsuds; where feasible, this should be on the following day.

To make each joint there will be required on an average 5 ounces of yarn and 1¼ quarts of cement, and the time required will be 15 minutes for one man. This time is the average time that would be taken per joint over a whole day's work.

Cement joints are also made in a similar manner to the joint described, but with the use of less cement and more yarn. While it is possible to obtain tight joints in this way, it is not thought that the joints obtained are as good as those made by the method described above. (Trustees.)

11. How would you determine the size of a meter that should be set in any given house?

Ans. The size of meter that should be set in any given house depends upon the amount of gas that is apt to be used at any one time, that is, upon the probable maximum rate of consumption. The only way to determine what this rate will be is to count the number of burners and gas-consuming appliances that may be installed in the house. It is usual to assume that every burner will consume five feet per hour. Where there are incandescent burners in use, this will give a liberal margin. The rate of consumption of gas appliances, when not known by previous experience, must either be estimated or actually obtained by setting a meter, lighting all the burners on the appliances and observing the consumption.

After the total number of burners is obtained (the consumption of the appliances in cubic feet being translated into burners by dividing the number of cubic feet per hour by five), the size of the meter necessary would be determined by the fitter, either by reference to a schedule furnished by the company giving the sizes of meters corresponding to various numbers of burners, or in the absence of any such schedule, from his knowledge of the capacities of meters in cubic feet per hour. There is considerable uncertainty regarding the capacities of meters, but the following table, based on a loss in pressure between the inlet and outlet of meter of five-tenths of an inch, and upon the smallest types of the various makes of meters, is a good one to use.

CAPACITY OF METERS.

Size	Cubic Feet Capacity per Hour with 5/10 Loss in Pressure	Equivalent in 5-foot Burners
3	55	11
5	75	15
10	120	24
20	160	32
30	270	54
45	315	63
60	475	95

CAPACITY OF METERS—*Contiued.*

Size	Cubic Feet Capacity per Hour with 5/10 Loss in Pressure	Equivalent in 5-foot Burners
100	600	120
150	1,015	203
200	1,380	276
300	1,635	327

Knowing the estimated rate of consumption in cubic feet of the house, the fitter need only turn to this capacity table and take that size of meter whose capacity is equal to or greater than the consumption required, if his company believed in setting a meter equal always to the possible maximum consumption in the house. In practice, however, there is seldom a time when all the burners and appliances in the house are used at the same moment, so that it is probably unnecessary to set a meter of the size called for by their united demands, and therefore most schedules for meter sizes are made up on the basis of providing a meter capacity of about two-thirds of the possible maximum demand. The only effect of setting meters according to such a schedule would be that, in the very rare cases where everything was being used at once, the meter would absorb more than five-tenths of an inch pressure. (Trustees.)

NINTH SERIES OF QUESTIONS—SECTION OF 1909—PRACTICAL CLASS—TRUSTEES GAS EDUCATIONAL FUND.

1. Describe two methods employed for "venting" oil storage tanks so as to permit the escape, when the tanks are being filled with oil, of the vapor that has accumulated in them and to prevent the formation of a vacuum while the oil is being pumped out, and state their respective advantages and disadvantages.

2. Give a description, illustrated with sketches, of some form of street main governor which is automatic in its action —that is, increases the pressure at its outlet as the demand for gas increases and decreases the pressure as the demand for gas falls off, and explain its action.

3. Give a brief description, illustrated with sketches, of the action of a simple single cylinder steam engine, explaining especially the setting and action of the eccentric and slide valve.

4. The answer to question No. 5 of the Eighth Series states that the specific heat of a gas, or vapor, at *constant pressure* —that is, when free to expand—as gas in a holder, is not the same as the specific heat of the same gas or vapor at *constant volume*—that is, when confined, as steam in a boiler. Which is greater? Give the reasons for your answers.

5. Give the specific heats, both for constant pressure and constant volume, of carbon monoxide, carbon dioxide, nitrogen, hydrogen and water vapor.

6. Explain the chemistry of that part of the process of purification which is carried on in the purifying boxes, including the removal of carbon dioxide and sulphuretted hydrogen by lime and the removal of sulphuretted hydrogen by oxide of iron. Give as far as you can the reactions occurring in each instance.

7. Give a description, illustrated with sketches, of a dry gas meter and explain its action, paying especial attention to the mechanism by which the amount of gas passed by the meter is accurately recorded on the dial.

8. Is it probable that all of the unaccounted-for gas reported by gas companies represents actual leakage loss from the holders, street mains and services? Give the reasons for your answer.

9. A consumer who has received an unusually large bill for gas consumed during the preceding month complains that it is not correct. Assume that it is your duty to investigate the complaint and tell how you would handle the job.

10. Describe some method of coating wrought iron pipe, such as is used for services, or some other way by which this pipe can be protected from corrosion.

11. Define the terms "Ashlar" and "Rubble" as used in designating different kinds of masonry.

12. Give the characteristics of a good mortar lime, and describe the preparation and use of lime mortar for brick-work construction, with the precautions to be observed to insure the greatest possible strength for the finished work.

Answers to Ninth Series of Questions—Section of 1909—Practical Class—Trustees Gas Educational Fund.

The answer to question No. 3 is included among the answers to the Twelfth Series of questions for the Section of 1908, and can be found on page 831 of this volume. An answer to question No. 4 has been included as part of a previous answer to be found on page 132 of Vol. II of the Proceedings. Answers to questions Nos. 1 and 10 have also been published in a previous volume and will be found as follows:

No. 1, Vol. II, page 117.
No. 10, Vol. II, page 259.

The answers to the other questions are as follows:

2. Give a description, illustrated with sketches, of some form of street main governor which is automatic in its action—that is, increases the pressure at its outlet as the demand for gas increases and decreases the pressure as the demand for gas falls off, and explain its action.

Ans. An automatic gas governor is one that will automatically establish and maintain predetermined pressures. The old style of balanced governor is capable of changing the volume of gas sent out while maintaining a uniform pressure at its outlet. Any desired change in the pressure, with this style of governor, is effected by adding or removing weights by hand. A perfect and automatic governor, for use in maintaining the supply of gas to a system of street mains, must change volume and pressure together, without manipulation, the pressure being maintained always somewhat in proportion to the volume of gas going out.

One form of automatic governor in successful operation is shown in the accompanying cut. It consists of a bell, 6,

floating in a tank, 7, its interior being supplied with gas through pipe and valve, B, connected with the outlet of the governor, and subject to the pressure on the street mains at the governor outlet. When the bell is floating with a cer-

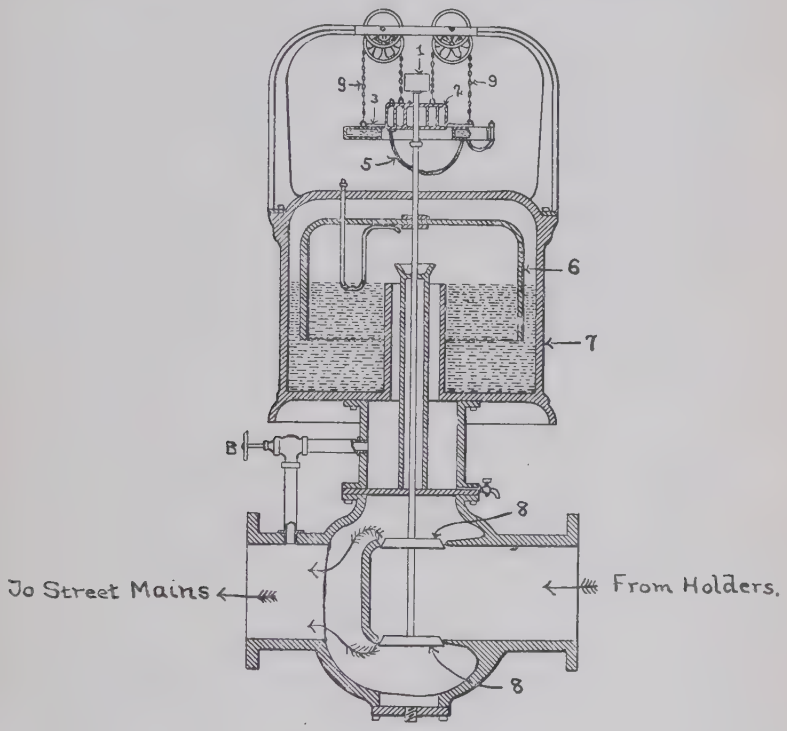

STREET MAIN GOVERNOR.

tain pressure in the street mains, it can be readily seen that as long as this pressure is furnished there will be no tendency on the part of the bell, 6, to change its position; but if, through an increased consumption on the main, the pressure in the main is reduced, the pressure in the pipe, B, and under the bell, 6, will be reduced, and the bell will tend to fall, giving more opening to the valves, 8, in the valve chamber of the governor, and permitting more gas to pass. So far, the action of the automatic governor is like that of an ordinary governor. The automatic governor differs from the ordinary

governor in that with this change in the position of the bell, 6, comes a change in the position of the weight balancing the gas pressure under the bell. This change is made by an ingenious contrivance, as shown in the cut. 3 is an annular ring containing mercury, and connected by means of a rubber tube, 5, with another annular ring, 2, which also contains mercury. But the ring, 2, is rigidly attached to the valve-rod connected with the valves, 8, and any increase in the weight of 2 tends to depress the bell and the valve-rod, giving more opening to the valve; whereas 3 is connected to the valve-rod by means of a chain or wire, 9, passing over pulleys. Any increase in the weight of 3, therefore, tends to raise the valve-rod, the bell and the valves. If, now, there be a transfer of mercury through the tube 5, from the annular ring 2 to the annular ring 3, the annular ring 3 will tend to fall, raising the annular ring 2, and the valve-rod, bell and valve. If, on the contrary, there be a transfer of mercury from the annular ring 3 to the annular ring 2, there will be an addition of weight to the valve-rod, and it and the bell and the valves will tend to fall and the valves to open. The level of the mercury in 2 and 3 will remain always the same—this for the reason that 2 and 3 are connected by a rubber tube. When, then, the pressure has fallen in the street mains, and, therefore, under the bell, and the bell sinks, giving more opening to the valves, 8, the ring 2 descends with the bell, the ring 3 is raised, because the wire or chain 9, passing over the pulleys, must follow the action of the ring 2, raising the ring 3 and causing some of the mercury to flow from it into the ring 2. We have, therefore, due to the reduction of pressure in the street mains, an increased opening on the valve, and an increase in the weight tending to hold the valve open, which means an increase of pressure. If, now, from the reduction in the consumption of the gas, the original pressure in the street mains is restored, there will be an increase in the pressure under the bell 6, which will give it a tendency to rise. It will carry with it the ring 2, depressing the ring 3, and there will be a flow of mercury from the ring 2 into the ring 3. At the same time the valve will partly close and there will

be a restoration of the conditions existing before the governor came into action.

The cup 1 is intended to receive weights used in adjusting the governor to the conditions under which it is to operate. These conditions once being established, and the governor being arranged to meet them, it requires no further attention, except to keep it cleaned and oiled. This governor can be so set that it will, for any given fall of pressure in the street mains, give a predetermined opening of the valves 8, and a predetermined pressure at the outlet of the governor, all within the limits permitted by the pressures thrown by the holders.

A feature of this governor is the provision made for its adjustment to meet the different conditions existing in works of the same size.

To illustrate this: We will take two works, each sending out 150,000 cubic feet per day, the holder pressure being 30/10, and the maximum send-out being 25,000 cubic feet per hour. For one of the works, say at "Gastown," the condition of the mains is such that a maximum pressure of only 20/10 is required, and a day pressure of 10/10 is sufficient.

For the other works, say at "Lightville," the condition of the mains and services is such that a day pressure of 18/10 and a maximum pressure of 28/10 is required; the margin of difference between the holder and maximum pressure in this case being only 2/10 against a difference at the other works of 10/10. In each case the same volume of gas passes through the governor valve in the same space of time. In the case of "Gastown" the valve would be open about 1 inch, and of "Lightville" 3 inches, or more.

To adapt the governor to meet such variable requirements and conditions, a series of three compartments or concentric vessels (2) are arranged around and attached to the valve stem, each of a different capacity, and so arranged that by adjusting to use any one, or any two, or all three at once, a given quantity of mercury can be made to form a column of mercury of any one of seven different heights. This enables the superintendent to secure a transfer of any desired quantity of mercury on any stroke of the valve.

The volume of mercury transferred for any given movement of the valve, valve stem and vessel 2 is increased by increasing the area of vessel 2. This vessel is so arranged that it may have any one of seven areas, as desired. The area to be used depends upon the conditions under which the governor must work.

In setting or adjusting the governor to meet the requirements of a works, the superintendent determines what pressure he desires at the lowest point of the district. He may desire to maintain at this point, say 15/10-inch pressure. He may find that to do this a day pressure of 20/10, and a night pressure of 30/10 must be maintained at the works; a difference of 10/10. Six ounces of mercury for each tenth (or 60 ounces) is put into ring 3. The governor is then weighted (in cup 1) to carry the day pressure of 20/10. When the consumption increases, the valves at once open, as above; this lowers vessel 2 and the mercury flows up from 3 into 2, the result being to increase the weight on one side and diminish it on the other. Say the valve has opened in response to demand enough to transfer 6 ounces; this would equal placing 12 ounces on the valve stem, and the bell or float having this extra weight, the pressure is increased correspondingly. When the maximum volume is reached, all of the mercury is in vessel 2, and the full pressure of 30/10 is on. (Trustees.)

5. Give the specific heats, both for constant pressure and constant volume, of carbon monoxide, carbon dioxide, nitrogen, hydrogen and water vapor.

Ans. The specific heats often used as those of the various substances named in the question are those determined by Regnault. These are given in a table in Hornby's Gas Engineers' Laboratory Handbook, page 294 (1894 edition), as follows:

	Constant Pressure	Constant Volume
Carbon Monoxide, CO...	0.2479	0.1758
Carbon Dioxide, CO_2....	0.2164	0.1535
Nitrogen, N_2.....	0.2440	0.1730
Hydrogen, H_2.....	3.4046	2.4146
Water Vapor	0.4750	0.3337

It has been found, however, that the specific heats of gases increase quite rapidly with increase in temperature, so that the use of constant values for the specific heats in problems involving widely differing temperatures does not give accurate results. In connection with a lecture delivered before the American Gas Light Association in 1903, Mr. Alfred H. White gave tables showing the specific heats of the various products of combustion for temperatures varying from 100° C. to 2500° C. Copies of these tables with the temperatures converted into degrees Fahrenheit are given on page 210 of Vol. II of the Proceedings. Inaccuracies in the experimental data on which these tables are based render it useless to attempt to interpolate more closely than 90°.

In using these tables it is necessary to assume a temperature and then use in the calculation the specific heats corresponding to this assumed temperature. If the calculated temperature does not agree closely with the assumed one, it is necessary to assume another temperature and do the work over again, continuing this process until a close agreement is obtained between the assumed and the calculated temperature. (Trustees.)

6. Explain the chemistry of that part of the process of purification which is carried on in the purifying boxes, including the removal of carbon dioxide and sulphuretted hydrogen by lime and the removal of sulphuretted hydrogen by oxide of iron. Give as far as you can the reactions occurring in each instance.

Ans. When gas containing carbon dioxide, CO_2, and sulphuretted hydrogen, H_2S, comes into contact with slaked lime or calcic hydrate, CaO_2H_2, both of these substances combine with the lime, forming carbonate and sulphide of lime, $CaCO_3$ and CaS, respectively. This double absorption continues until nearly all of the lime has been acted upon. If after this point has been reached the mixture of carbonate and sulphide of lime is still exposed to the gas, the sulphide will be changed to carbonate by the substitution of carbon dioxide for the sulphur, on account of the affinity between lime and

carbon dioxide being stronger than that between lime and sulphur, and as a result of this substitution, the sulphuretted hydrogen will be set free to pass forward with the gas. If the lime is used to remove carbon dioxide only, this substitution is allowed to go on until the sulphur has been entirely driven out of the lime, the sulphuretted hydrogen being absorbed by means of oxide of iron in additional purifiers; but if the lime is used for the removal of both carbon dioxide and sulphuretted hydrogen, the first box must be taken off for cleaning and refilling as soon as sulphuretted hydrogen shows at the outlet of the next to the last box in action, at which time there will still be considerable sulphide of lime left in the first box. It is not necessary to test for carbon dioxide in this case, since none can be present as long as the gas is free from sulphuretted hydrogen.

The reactions occurring between the lime and the impurities and between the carbon dioxide and sulphide of lime are expressed by these equations:

$$CaO_2H_2 + H_2S = CaS + 2H_2O$$
$$CaO_2H_2 + CO_2 = CaCO_3 + H_2O$$
$$CaS + CO_2 + H_2O = CaCO_3 + H_2S.$$

When oxide of iron is used for the removal of sulphuretted hydrogen, either alone or in connection with lime used for removing carbon dioxide, as the sulphuretted hydrogen comes in contact with the hydrated ferric oxide, or sesqui-oxide of iron, $Fe_2O_3.H_2O$, in the purifiers the sulphur of the former unites with the iron and forms iron sulphide, and the hydrogen unites with the oxygen and forms water. At the same time part of the sulphur of the sulphuretted hydrogen is liberated in a free state.

The probable chemical changes are shown by the equations:

$$Fe_2O_3.H_2O + 3H_2S = Fe_2S_3 + 4H_2O \text{ and}$$
$$Fe_2O_3.H_2O + 3H_2S = 2FeS + S + 4H_2O.$$

It is supposed that from 17% to 30% of the sulphuretted hydrogen absorbed by the oxide is absorbed according to the second equation, and the rest according to the first equation. (Trustees.)

7. Give a description, illustrated with sketches, of a dry gas meter and explain its action, paying especial attention to the mechanism by which the amount of gas passed by the meter is accurately recorded on the dial.

Ans. A dry gas meter consists of a box, usually rectangular in shape and made of tin plate, divided into two main compartments by a horizontal partition. The lower of these compartments is also divided into two equal parts by a vertical partition midway between the front and back of the meter. In the upper compartment there is an enclosed gas-tight chamber.

The measuring apparatus, contained in the two divisions of the lower compartment, consists of a bellows in each division, formed by means of a circular metal disc fastened to one edge of a leather diaphragm, the other edge of which is attached to the central partition, the whole forming a gas-tight space. The alternate opening and closing of these bellows by the pressure of the gas as it is admitted first into the space inside and then into the spaces outside of them furnishes motive power which, by suitable mechanism, is made to operate valves to control the flow of gas into and out of the diaphragms and outer spaces, and also to work the gears which record the amount of gas passed through the meter. The mechanism also controls the extent to which the bellows can open and close, so that a fixed and definite amount of gas passes into and out of the meter each time they are filled and emptied.

The manner in which these operations are performed can be understood by referring to the accompanying cut showing views of the meter with its top and part of the top of the valve chamber removed, with the back removed and with one of the sides removed. In these views A, A is the case, B the horizontal partition, C the vertical partition, D the valve chamber, E, E the metal discs and F, F the diaphragms, which are so attached to the discs and partition that they can only bend outwards. Each of the discs is guided so that it moves along straight lines by the wires W, W, and to each is loosely attached one end of an arm G, the other end of which is rigidly fastened to a vertical rod H, resting in a bearing on

the bottom of the meter and passing through a stuffing box into the upper compartment. The upper end of each of these vertical rods is rigidly fastened to one end of one of a pair of arms I and K joined together loosely by a pin. The other

DRY METER

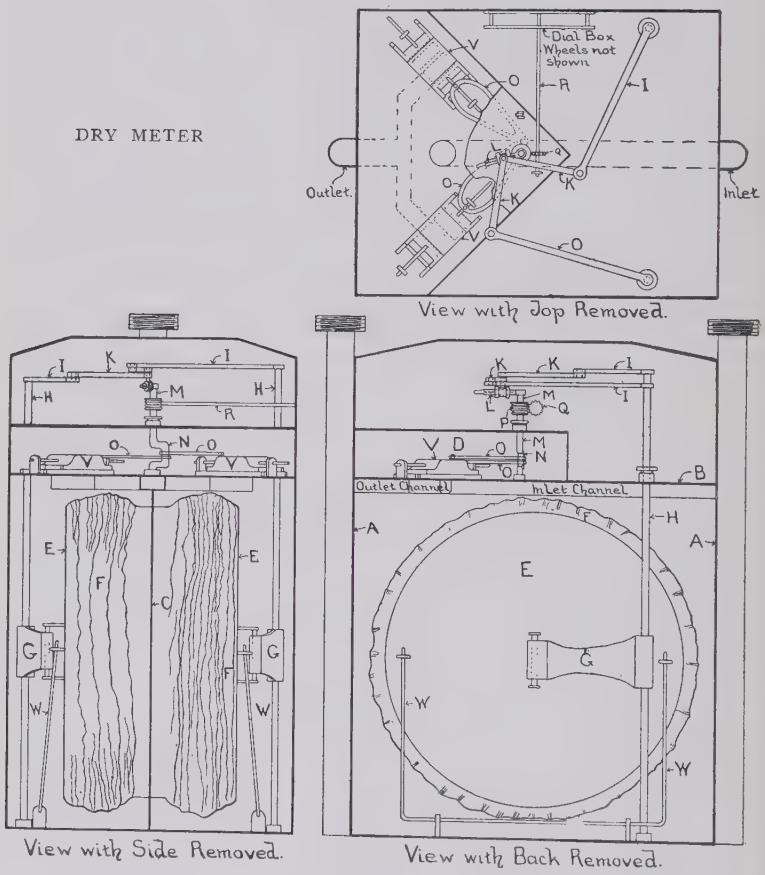

end of each of the arms K is fastened to a pin on a crank arm L working an upright shaft M. This shaft passes through a stuffing box into the valve chamber and is there provided with an eccentric N, from which the valves V, V are worked through connecting rods O, O. The valves are D valves working on seats containing ports exactly like those in a simple steam engine. In each case the admission port nearest the

shaft opens into the space inside the bellows and that farthest from the shaft into the space outside the bellows, while the exhaust port opens into a channel leading to the outlet pipe. A channel from the inlet pipe brings the gas into the valve chamber, which is always filled with gas coming from the service.

The valves are set at such an angle with one another that the supply of gas cannot be cut off from both sides of the meter at the same time, and consequently there is no danger of its sticking on a "dead centre."

Starting with the valves in the position shown on the cut the action is as follows, it being assumed that gas is being used: The inside of the bellows in the front compartment and the space outside of the bellows in the back compartment are open to the inlet, while the outside space in front and the inside of the bellows in the back are open to the outlet through the valves and the exhaust port. As gas is being used the pressure on the outlet side is reduced, and the higher pressure in the spaces open to the inlet causes the front bellows to open and the back bellows to close. In moving, the discs E, E carry with them the arms G, G, and a turning motion is thus imparted to the rods H, H from which it is transmitted through the arms L, L and K, K to the crank L and thus to the shaft M and the eccentric N. The rods H, H oscillate back and forth through a small arc only, but by means of the arms I, I and K, K and the crank L this oscillatory motion is transformed into a rotary motion of the shaft M. The turning of the eccentric moves the valves until the conditions of port opening are reversed, first by the front valve and shortly after by the back valve, and the gas then flows into the outside space in front and into the bellows in the back, the front bellows closing and delivering gas while the opening of the back bellows forces gas out of the outer space. A trip catch is provided which trips and allows the crank L to pass over it when this crank is turning in the right direction, but catches and prevents its turning in the wrong direction and thus prevents the meter from running backwards.

It is evident that for each opening and closing of each

bellows an amount of gas is displaced which is equal to the volume of the space traversed by the disc, that is, the volume of a cylinder having a base equal to the area of the disc and a height equal to the length of its travel. As the length of travel is kept constant by the controlling mechanism described above, every revolution of the shaft M corresponds to the passage of a fixed, definite amount of gas, and to record the amount of gas passed it is only necessary to record the number of revolutions of this shaft on a dial arranged so as to read, not this number, but the number of feet of gas corresponding to it. To do this a worm wheel P is placed on the shaft M. This worm works a gear wheel Q on a horizontal shaft R, running to the dial of the meter and carrying on its outer end the test hand on this dial. The number of teeth in this gear is so taken that one revolution of it and the shaft will represent either two, five or ten feet, according to the size of the meter. Thus, in a five-light meter, the size of the discs and the length of their travel may be so adjusted that one-sixth of a cubic foot of gas is displaced during a complete cycle of operations, corresponding to one complete revolution of the shaft M. One revolution of the test hand on a meter of this size corresponds to two feet, so the gear wheel P is given twelve teeth and the shaft Q therefore makes one revolution for each twelve revolutions of the shaft M. This shaft Q is the driving shaft of the recording mechanism, and the required rate of revolution of the other hands on the dial is obtained by using the proper chain of gear wheels. (Trustees.)

8. Is it probable that all of the unaccounted-for gas reported by gas companies represents actual leakage loss from the holders, street mains and services? Give the reasons for your answer.

Ans. It is not probable that all the unaccounted-for gas reported by gas companies is due to actual leakage loss from the holders, street mains and services. In fact, there are many reasons for believing that a large part of the difference between the amount of gas indicated as made by the station

meter and that indicated as sold by the consumers' meters is due to a difference between the temperature at which the gas is measured in the station meter and that at which it is measured in the consumers' meters, to inaccuracy of registration in the meters, and, where there are many street lamps, to an actual consumption that is in excess of the amount estimated.

The difference between the temperature at which the gas is measured in the station meter and that at which it is measured in the consumers' meters is an important factor in increasing the amount of unaccounted-for gas, especially if no correction for temperature is applied to the station meter registration. It is now quite customary to keep the temperature of the gas in the purifying boxes comparatively high in order to increase the efficiency of the purifying material, and this leads to the gas being measured in the station meter at a comparatively high temperature, averaging in some cases 70° or over during the whole year. Consumers' meters are, as a rule, set in comparatively cool localities, such as cellars in residences and under show windows in stores, and as the consumption during cold weather is greater than that during warm weather, most of the gas is measured in the consumers' meters at a temperature much below that at which it is measured in the station meter. It is a difficult matter to obtain exact information as to the average temperature at the consumers' meters, but such tests as have been made show that, as a rule, there is enough difference between this temperature and that at the station meter to account for from 3% to 4% of the total make appearing as unaccounted-for gas, even though the registration is perfectly correct in each case.

If there is any error in the registration of the station meter it is apt to be fast, since if this meter is slow the manufacturing results are made to appear poor and the cause is looked up and corrected; while if the meter is fast the manufacturing results are made to appear good, a state of affairs that is very readily accepted as being due to good management. On the other hand, the tendency in the case of the consumers' meters is to register less gas than is actually passed, owing to the

stiffening of the diaphragms with age and to the development in the valves of leaks which permit gas used in small quantities, as for hall lights and lights kept burning at night, to pass through the meters without being registered. With a fast station meter and a number of slow consumers' meters the amount of gas unaccounted for may be quite large, even though the actual leakage is small. It is, therefore, important that both the station meter and the consumers' meters be tested at regular intervals so as to insure that they are registering accurately.

Where the street lamp burners are not provided with governors the consumption is very apt to be in excess of that called for by the street lighting contract, which is usually taken as a basis for estimating the amount of gas consumed by the lamps. This is especially the case where there is much difference in level between different parts of the district, or where the street main system is such that it is necessary to have a great difference in pressure over part of the district between the hours of heavy consumption and those of light consumption, since in such cases it is impossible to avoid differences of pressure at the burner during different parts of the night, and it is usually necessary to have the consumption at the time of lowest pressure very nearly, if not fully, equal to the consumption specified in the contract, which makes the consumption during the time of higher pressure larger than is called for.

These points should always be carefully considered and their influence determined as far as possible when dealing with the question of a large amount of unaccounted-for gas. At the same time the influence of the actual loss from the holders and the distribution system should not be neglected. (Trustees.)

9. A consumer who has received an unusually large bill for gas consumed during the preceding month complains that it is not correct. Assume that it is your duty to investigate the complaint and tell how you would handle the job.

Ans. The first step in the investigation of a complaint of

an unusually large bill for gas should be to check the work done in making out the bill, to see that no mistake has been made either in copying the meter readings, or in calculating the amount of money from the quantity of gas. Finding everything correct in this respect the reported meter reading should be verified by at once reading the meter again and comparing the rate of consumption indicated by the difference between this reading and the last one on the bill in question with the rate shown by the bill.

If no error appears here the question whether the consumption complained of was unusually large should be settled by examining the record of the previous bills of the same consumer in the same location for the preceding two years, or if the consumer is a new one, or has recently moved to his present location, the bills of the former consumer in the same house and those of the complaining consumer in his former residence should be looked up. If this examination shows that the bill is little, if any, larger than would be expected from the record of previous years this record should be shown to the consumer and an attempt made to persuade him that the bill was not an abnormal one. In making the comparison of the present and former bills, the bills for the month next preceding that in question should also be included in order to ascertain whether or not through an under reading of the meter at the end of the preceding month the bill for that month had been made small at the expense of that for the month in question. If the examination showed that it was unusually large, or the consumer could not be convinced that it was not, an endeavor should be made to find out either by questioning the consumer or members of his family, or by investigation in other directions, whether there was not some good reason, such as the installation of some new gas appliances, the presence of guests in the house for a week or two, the giving of a reception or other entertainment, or the occurrence of sickness in the family, which explained why more gas than usual should have been burned that month. If care is not taken to have each meter read as nearly as possible on the same date each month and the date on which each statement is taken is not given on the bills and on the records, it should be made certain

that the bill in question did not cover an unusually long period of time. If any reasons for an abnormal bill are brought to light in this way they should be reported to the consumer and an endeavor made to satisfy him that the bill was correct.

If no reasons are found, the person investigating should try to form an opinion of his own as to whether the bill was an unreasonable one for the house by an examination of the number and character of the burners and gas appliances that are used. Failing to discover in these ways any cause for an extra consumption of gas, the meter should be removed and tested. If the test shows the meter to be correct, or so little in error as not to account for the extra size of the bill, the pressures at the house should be investigated in connection with the character of the burners and appliances used, and if the burners and other appliances are not adapted to burn gas economically under the existing pressures, an offer should be made to the consumer to substitute new burners, and to adjust the other gas consuming appliances to suit the existing pressures.

In the event of not discovering any reason for an abnormal bill either in the meter, which should be very carefully examined as to the condition of its gearing, diaphragms, etc., if there be the slightest doubt that the prover test does not indicate the true condition of affairs, or in the condition existing at the house, the payment of the bill should be insisted upon unless it is thought that its size was so unreasonable from the consumer's standpoint that it would be bad policy to force its entire payment. In such a case a certain portion should be remitted.

In all dealings with the consumer during the investigation he should be treated in such a way as to make him feel that it was thought that he was sincere and might have some reason for his complaint without committing the gas company to the acknowledgment that there was an error until the matter has been investigated. (Trustees.)

11. Define the terms "Ashlar" and "Rubble" as used in designating different kinds of masonry.

Ans. Baker, Treatise on Masonry Construction, following the recommendations of a Committee of the American Society of Civil Engineers, gives these definitions:

"Ashlar. Cut-stone masonry or masonry composed of any of the various kinds of cut-stone." (Cut-stone he has previously defined as "all squared stones with smoothly dressed beds and joints.") "From its derivation ashlar apparently means large square blocks; but practice seems to have made it synonymous with 'cut stone,' and this seconadry meaning has been retained for convenience.

"Broken Ashlar.....in which the joints are not continuous.

"Small Ashlar, in which the stones are less than one foot thick. Term not often used.

"Rough Ashlar. A term sometimes given to squared-stone masonry when laid as range work; 'but it is more logical and more expressive to call such masonry squared range-work.'

"Squared-stone Masonry. Work in which the stones are roughly squared and roughly dressed on beds and joints. The distinction between squared-stone masonry and ashlar lies in the degree of closeness of the joints. According to the report of the Committee of the American Society of Civil Engineers, 'when the dressing on the joints is such that the distance between the general planes of the surface of the adjoining stones is one-half inch or more, the stones properly belong to this class;' nevertheless, such masonry is usually classed as ashlar or cut-stone masonry.

"Quarry-faced Masonry. That in which the face of the stone is left as it comes from the quarry.

"Pitch-faced Masonry. That in which the face of the stone is roughly dressed.

"Range-work. Masonry in which the course is of the same thickness or rise throughout.

"Broken Range-work. Masonry in which the courses are not continuous throughout.

"Random-work. Masonry which is not laid in courses at all.

"Rubble Masonry. Masonry composed of unsquared stone.

"Uncoursed Rubble. Masonry composed of unsquared stones laid without any attempt at regular courses.

"Coursed Rubble. Unsquared stone masonry which is levelled off at specific heights to an approximately horizontal surface. It may be specified that the stone shall be roughly shaped with the hammer, so as to fit approximately."

Prof. L. M. Haupt, in a paper read before the Engineers' Club of Philadelphia, says:

"Another authority defines ashlar to be composed of 'stones dressed and pitched well and properly so that the *face* of each be a polygon of straight sides not to exceed *six* in number.' This is called *broken* ashlar; but if ashlar be *squared* stone, as elsewhere defined, this class must be excluded; and since it is more than rubble, having the *joints dressed,* it must belong to the genera of 'cut stone;' yet according to the definition given by the Committee of the American Society of Civil Engineers, the joints should be at right angles or squared, which they are not, hence it is desirable to make a distinction between ashlar and 'cut-stone' by omitting the word *squared* from the definition of the latter, and calling the work just described *dressed rubble.* By so doing, it is excluded from the species ashlar, yet included in the genera 'cut-stone.'

"It would appear that the definitions based on the relative position and kind of joints would preserve the distinction between the two grand divisions of ashlar and rubble. So long as the stones are 'squared,' that is, having beds and vertical joints at right angles to each other, the masonry built of them is *ashlar,* whether the courses be continuous or not. If continuous and of equal height it is *'regular ashlar;'* if discontinuous it is *'broken range,'* or *'random ashlar.'* (These terms are practically synonymous.) If continuous but of unequal height, it is simple *range-work* or *block-in-course.*

"If the stones are *not 'squared,'* but have hewn joints perpendicular to the face, and making any angles with each other, it is *'dressed rubble,'* and if unhewn or in a natural state, simply *'rubble.'* The face of 'dressed rubble' may be hewn, pitched, or rough."

These two authorities therefore practically agree as to the

definition of ashlar, but disagree as to that of "cut-stone" and the making of ashlar synonymous with cut-stone. Neither does Prof. Haupt recognize the distinction between ashlar and squared-stone masonry, while he gives the name of "dressed rubble" to a class of masonry that does not seem to be mentioned at all by Baker, probably because it is not very common. Still the main distinction between the two species is the same with both authorities, and is that ashlar is masonry composed of "squared" stones; and rubble, that composed of "unsquared stones." (Trustees.)

12. Give the characteristics of a good mortar lime, and describe the preparation and use of lime mortar for brick-work construction with the precautions to be observed to insure the greatest possible strength for the finished work.

Ans. Good lime may be known by the following characteristics:

1. Freedom from cinders and clinkers, with not more than 10 per cent. of other impurities, as silica, alumina, etc. 2. Chiefly in hard lumps with but little dust. 3. Slakes readily in water, forming a very fine smooth paste, without any residue. 4. Dissolves in soft water, when this is added in sufficient quantities. These simple tests can be readily applied to any sample of lime.

The lime which, as indicated above, should be in hard lumps with but little dust, must first be slaked and made into a paste. The ordinary process of slaking lime consists in placing the lumps in a layer 6 or 8 inches deep in either a water-tight box, or a basin formed in the sand to be used in mixing the mortar, and pouring upon the lumps a quantity of water 2½ to 3 times the volume of the lime. Sand in proper proportions is spread evenly over the paste thus made, and the ingredients are thoroughly mixed with a shovel or a hoe, usually the latter, a little water being added occasionally if the mortar is too stiff. It is best to mix the mortar stiff and thoroughly drench the brick before laying, as mixing the mortar thin interferes with its setting, and still more with its adhesion to the brick. Watery mortar also contracts excessively in

drying (if it ever does dry), causing undue settlement and, possibly, cracks or distortion. Wetting the brick before laying also removes from the surface dust which otherwise would prevent perfect adhesion.

Owing to its not setting when excluded from the air, common lime mortar should never be used for very thick walls, in the interior of which it will not harden, nor under water, nor in soil that is constantly wet; and, owing to its weakness, it is unsuitable for structures requiring great strength, or subject to shock.

In slaking the lime the quantity of water used should be carefully regulated. Too much water reduces the slaked lime to a semi-fluid condition and injures its binding qualities. If too little is used in the first place and then more added after the slaking is well under way, and a portion of the lime already reduced to powder, the temperature is suddenly depressed and the lime chilled, rendering it granular and lumpy. It is also very important that the lime should not be stirred while slaking. The essential point is to secure the reduction of all the lumps. The common limes contain impurities which prevent a thorough, uniform, and prompt slaking of the entire mass; hence all the lime necessary for any required quantity of mortar should be slaked at least one day before being incorporated with sand, to avoid all danger to the masonry from subsequent enlargement of volume and change of condition. The paste should be protected from the air by being covered with sand until used.

As a paste of common lime sets or hardens very slowly, even in the open air, unless it be subdivided into very small particles or films, it is important that the lime paste in common mortar should be but slightly in excess of what is sufficient to coat all the grains of sand and to fill the voids between them. If this limit be exceeded the strength of the mortar will be impaired. With most sands the proper proportions will be from 2.5 to 3 volumes of sand to 1 volume of lime paste. Generally, if either less or more sand than this be used, the mortar will be injured, in the former case from

excess of lime paste, and in the latter from porosity. (Baker, Masonry Construction.)

For precautions as to the quality of sand, see answer to question 12, Third Series.

SECOND SERIES OF QUESTIONS—SECTION OF 1911—PRACTICAL CLASS—TRUSTEES GAS EDUCATIONAL FUND.

1. What is spontaneous combustion and in what part of a coal gas works is it most apt to occur?

2. What are the essential differences in construction and operation between non-generator (plain or direct fire) furnaces, generator furnaces and recuperative furnaces as used for heating gas retorts?

3. Two distinct types of apparatus, which may be called the Generator-Superheater and the Generator Retort types respectively, are used for the manufacture of carburetted water gas. How do they differ from each other and which is the most extensively used at the present time?

4. Name some of the useful purposes to which the bye-products or residuals of coal gas manufacture are applied.

5. What is the action of the water seal as applied in the hydraulic main of a coal gas works and the washbox of a water gas works?

6. Define the term Specific Gravity of a Gas. Give the limits between which you would expect the Specific Gravity of Coal Gas to vary. Same for Carburetted Water Gas. How do you account for the difference in Specific Gravity between the two gases?

7. Give the weight of a cubic foot of each of the following

gases when dry and at a temperature of 60° F. and a pressure of 30 in. of mercury:

Air	
Carbon Dioxide	CO_2
Carbon Monoxide	CO
Marsh Gas	CH_4
Hydrogen	H_2
Nitrogen	N_2
Oxygen	O_2
Ethane	C_2H_6
Ethylene or Olefiant Gas	C_2H_4

8. Describe the ordinary qualitative tests for the presence in gas of Tar, Ammonia, NH_3, Carbon Dioxide, CO_2, and Sulphuretted Hydrogen, H_2S, and state at what points in the apparatus the tests for each should be made in order to determine that the gas is being properly purified. Give your reason in each case.

9. What is the meaning of "candle power" in the statement "this is a 20 candle power gas light"?

10. Why are Bunsen or atmospheric burners used in gas cooking stoves and incandescent gas lights? Why are they not used in the ordinary cylindrical gas heating stoves and gas radiators?

11. What is a struck bushel? What is a heaped bushel? What is an American gallon? What is an Imperial (English) gallon? Give your answers in cubic inches and cubic feet.

12. What is Portland cement, how is it made, and what tests should be applied to any given sample to determine its quality?

Answers to Second Series of Questions—Section of 1911—Practical Class—Trustees Gas Educational Fund.

An answer to question No. 5 is included among the answers to the Fourth Series of Questions for the Section of 1910, and can be found on page 805 of this volume. An answer to question No. 11 will also be found in this volume, on

page 849, among the answers to the Fifth Series of Questions for the Section of 1910. Answers to questions Nos. 6, 8 and 10 have been published in a previous volume of the Proceedings, and can be found as follows:

No. 6, Vol. I, page 272.
No. 8, Vol. I, page 273.
No. 10, Vol. I, page 279.

The answers to the other questions are as follows:

1. What is spontaneous combustion and in what part of a coal gas works is it most apt to occur?

Ans. Spontaneous combustion is combustion which is caused not, as is ordinarily the case, by the exposure of combustible matter to an outside source of heat of intensity and capacity sufficient to heat the combustible to the temperature of ignition, but by a rise in temperature produced by reactions taking place either between two or more of the different substances of which the combustible matter is composed or between these substances and the oxygen of the surrounding air. In other words, it is combustion which is brought about without the application of fire, or of intense heat from an outside source.

Spontaneous combustion can only take place under conditions which permit of the comparatively rapid oxidation of one or more of the components of a combustible substance and at the same time confine the heat produced by this oxidation to such an extent that it will produce local heating up to the temperature of ignition.

In gas works spontaneous combustion is most apt to take place in the interior of the piles of gas coal stored for future use, or in fresh oxide of iron purifying material just after it is removed from the purifiers, but it may also occur as the result of the accumulation of oily waste or rags in a confined space. (Trustees.)

2. What are the essential differences in construction and operation between non-generator (plain or direct fire) fur-

naces, generator furnaces and recuperative furnaces as used for heating gas retorts?

Ans. The essential differences in construction between plain and generator furnaces as used for heating gas retorts are in their size and location. The plain furnace is small, with a shallow bed of fuel, from 18 in. to 24 in. deep, and is located in the setting just below the space between the bottom retorts, while the generator furnace is larger, with a much deeper bed of fuel, this being 3 ft. deep in the case of so-called half depth furnaces, and 5 ft. to 6 ft. deep for full depth furnaces, and is entirely separate from the setting, being usually directly beneath it.

There are other important differences. The plain furnace is filled and cleaned through the same opening, which is closed by a loosely fitting door, while the generator furnace has an upper door for filling and a lower one for cleaning, both arranged to close air tight. No provision is made in the plain furnace for the control of the air supply except as this can be effected by the stack damper, while the generator furnace is so constructed that this supply can be carefully regulated.

The essential difference in operating is in the manner in which the fuel is burnt. In the plain furnace the carbon of the fuel is burnt at once to carbon dioxide, CO_2, while in the generator furnace there is a double combustion, first that of the carbon to carbon monoxide, CO, in the furnace proper, and then that of this carbon monoxide to carbon dioxide in the setting, by means of a seconadry air supply. The direct combustion of the plain furnace requires a large excess of air, the total amount being two or three times that theoretically required, while in the generator furnace the air is carefully regulated, and need not be more than ten to fifteen per cent. in excess of the theoretical quantity required for perfect combustion. The volume of air to be heated being smaller, a higher temperature may be obtained in the setting heated with a generator furnace with a smaller consumption of fuel.

In both the plain and the generator furnace, the waste gases are allowed to escape to the chimney at a high temperature.

The recuperative furnace differs from these in imparting to the air to be used for burning the fuel the heat in the waste gases, which are then discharged into the chimney at a low temperature. Thus there is carried back into the setting some of the heat lost in the operation of the other furnaces. In other respects there is no difference between generator and recuperative furnaces. (Trustees.)

3. Two distinct types of apparatus, which may be called the Generator-Superheater and the Generator Retort types respectively, are used for the manufacture of carburetted water gas. How do they differ from each other and which is the most extensively used at the present time?

Ans. The essential difference between the generator-superheater and the generator-retort types lies in the method employed to produce the oil gas, necessary to carburet water gas, this water gas being in each case made in a generator, or, as it is sometimes called, a cupula or gasogene.

In the generator-superheater apparatus, which is the type most commonly used, the oil gas required for carburetting is made in the presence of the water gas in one or more vessels connected directly to the generator and lined with fire clay blocks and filled with a checker work of fire brick piled in such a way as to afford channels through which the mixture of oil vapors and water gas passes—not in a direct course, but with frequent changes of direction produced by laying the brick in any course at right angles to those in the courses next to it, and over the spaces left between those in the courses parallel and next but one to it. Two such vessels are usually employed, the first being called the carburetter and the second the superheater. During the "blow" the checker bricks are heated by the combustion in the spaces between them of the producer gas formed in the generator. During the "run" the oil is introduced in the top of the carburetter in the form of a spray, which is rapidly vaporized, and the vapors are picked up by the water gas as it comes into the carburetter from the generator and carried through the checker work in both the carburetter and the superheater, being converted by

this exposure to heat into a "fixed" or permanent oil gas, which carburets, that is, gives illuminating power to, the water gas.

In the generator-retort type the water gas generator is entirely separate from the carburetting portion of the apparatus, which consists of a carburetter and one or more retorts. The water gas made in the generator is taken into a relief holder and then passed into the carburetter. This is usually a rectangular iron vessel in which are a number of shallow pans set on a slight incline. These pans are fastened on one end and both sides to the shell of the carburetter, an open space being left at the other end, and each pan is inclined in the contrary direction to, and has the open space opposite the closed ends of, the pans immediately above and below it. Under each pan is a steam coil. The naphtha used for carburetting is introduced at the top of the carburetter, falls on the first pan, flows down it and overflows from the open end on to the pan next below and so on, being vaporized by the heat given out by the steam coils. The water gas, also introduced at the top, travels back and forth over the pans picking up the naphtha vapor and passes out at the bottom charged with this vapor. The temperature in the carburetter must be maintained at a point sufficiently high to vaporize all the naphtha before it reaches the bottom. The mixture of water gas and naphtha vapor passes from the carburetter into externally heated "through" retorts, similar in construction and the arrangements by which they are heated to coal gas retorts, and in passing through these retorts the vapors are converted by exposure to heat into a permanent oil gas.

When heavy oil is used for carburetting the water gas the carburetter is omitted, since it would be impossible to maintain it at a temperature sufficiently high to vaporize such oil, and the oil is introduced directly in the retort, usually passing first into a pipe that carries it from the gas outlet end of the retort almost to the inlet end. In its passage through this pipe it is vaporized and the vapors issuing from the open end mix with the water gas and travel back through the retort, being converted by the heat into a permanent gas. Heavy oil cannot, however, be used to the best advantage in this form

of apparatus, which was especially designed for the use of naphtha. (Trustees.)

4. Name some of the useful purposes to which the by-products or residuals of coal gas manufacture are applied.

Ans. *Coke:* Coke and breeze are used as fuel for manufacturing and domestic purposes.

Retort Carbon: Carbon is used extensively for electrical purposes.

Gas Tar: Gas tar, in its crude state, is chiefly used as a preservative coating for wood and metal, for fuel, and for the manufacture of roofing felt. The distillates of gas tar are many. Among them are benzol, naphtha, benzine, creosote oils, anthracene oils and naphthalene. Benzine and anthracene are used in the manufacture of aniline dyes. Naphtha and benzine are used to enrich gas, as solvents for pigments in paints, and in rubber manufacture. Creosote is used to preserve wood and in the manufacture of carbolic acid. Naphthalene is used as an enricher of gas in so-called "Albo-Carbon" lamps, and to preserve fabrics from moths. The residue remaining after these substances have been driven off is called pitch and is used principally in roofing and in paving concrete.

Ammoniacal Liquor: From ammoniacal liquor are manufactured sulphate of ammonia, muriate of ammonia (sal-ammoniac) and other ammonia salts, and aqua ammonia. Aqua ammonia is used for cleaning wool and other fibres, in refrigerating and in the manufacture of ice and soaps. Sulphate of ammonia is used as a fertilizer and in manufacturing commercial soda. Sal-ammoniac is used in galvanic batteries and in the arts.

Spent Lime: Spent lime is sometimes used as a fertilizer.

Spent Oxide: Sulphuric acid and cyanogen are obtained from spent oxide. (Trustees.)

7. Give the weight of a cubic foot of each of the following gases when dry and at a temperature of 60° F. and a pressure of 30 in. of mercury:

Air
Carbon Dioxide ..... CO_2
Carbon Monoxide ..... CO
Marsh Gas ..... CH_4
Hydrogen ..... H_2
Nitrogen ..... N_2
Oxygen ..... O_2
Ethane ..... C_2H_6
Ethylene or Olefiant Gas..... C_2H_4

Ans. The weights of a cubic foot of the gases named when dry and at a temperature of 60° F. and a pressure of 30 in. of mercury are as follows:

	Grains.	Pounds.
Air	534.5010	0.076357
Carbon Dioxide, CO_2	814.4191	0.11634
Carbon Monoxide, CO	518.2735	0.074039
Marsh Gas, CH_4	296.1563	0.042308
Ethylene or Olefiant Gas, C_2H_4	518.2735	0.074039
Hydrogen, H_2	37.0195	0.0052885
Nitrogen, N_2	518.2735	0.074039
Oxygen, O_2	592.3127	0.084616
Ethane, C_2H_6	555.2930	0.0793275

(These weights are on the avoirdupois scale.) (Trustees.)

9. What is the meaning of "candle power" in the statement "this is a 20 candle power gas"?

Ans. The words "candle power" in the statement "this is a 20 candle power gas" are used to denote the amount of light given by the flame produced when any gas is burned in a standard burner at the rate of five cubic feet per hour, expressed in terms of a unit, which is the amount of light given by a standard sperm candle of six to the pound burning at the rate of 120 grains per hour. The statement "this is a 20 candle power gas" is, therefore, a statement that the gas

named will, when burned in the standard burner at the rate of five cubic feet per hour, produce a flame giving an amount of light twenty times as great as that given by the standard sperm candle of six to the pound burning at the rate of 120 grains per hour.

Different forms of burners are used in different localities as the standards for the purpose of determining the candle power of gas. In England when the gas to be tested is a coal gas from 14 to 16 candle power, the burner generally prescribed by law for use as the standard burner is a special form of Argand burner known as Sugg's London Argand, No. 1. For cannel gas of from 20 to 26 candle power a flat flame burner is commonly prescribed as the standard. In this country the No. 7 Bray Slit Union burner has been very generally adopted as the standard burner, especially where the gas to be tested is either a carburetted water gas or a mixture of this gas with coal gas. The London Argand is also used in many instances for coal gas. It is always necessary to note what burner has been employed as a standard in each case before any comparison can be made between the reported candle powers of the gases supplied in different localities.

As far as the candles are concerned the only qualifications generally adopted are that they shall be sperm candles of six to the pound and shall be burnt at the rate of 120 grains per hour. Wide variations in the amount of light given by different candles, all of which fulfilled the above requirements, led the London Gas Referees to adopt regulations for securing uniformity in standard candles, which prescribe the method and materials to be used in the manufacture of the wicks and the melting point of the spermaceti that are to be employed in making such candles. In the absence of any regulations on the subject in this country it is well to see that the candles used fulfill as nearly as possible the requirements of the Gas Referees.

These requirements as given in Butterfield's Chemistry of Gas Manufacture, are as follows:

"Regulations for Securing Uniformity in Standard

Candles. The wicks shall be made of 3 strands of cotton plaited together, each strand consisting of 18 threads. The strands shall be plaited with such closeness that when the wick is laid upon a rule and extended by a pull of about 1 ounce, just sufficient to straighten it, the number of plaits in 4 inches shall not exceed 34 nor fall short of 32.

"Each wick shall be of suitable length, not less than 12 inches, and looped ready for fixing in the mould. After having been bleached in the usual manner and thoroughly washed, the wicks shall be steeped in a liquid made by dissolving 1 ounce of sal-ammoniac and ½ ounce of crystallized boracic acid in a gallon of distilled water; they are then to be gently wrung or pressed till most of the liquid has been removed, and dried at a moderate heat while lying horizontally.

"Such a wick cut to a length of 12 inches, when stretched as above, shall not weigh more than 7 nor less than 6 grains. The weight of the ash remaining after the burning of 10 wicks which have not been steeped in boracic acid, or from which the boracic acid has been washed out, shall be not more than 0.03 grain.

"Wicks made in accordance with this prescription shall be sent to the office of the Gas Referees, by whom they will be examined and certified.

"The wicks so certified are to be used by the candle-maker in the condition in which they are returned to him.

"When the wicks are set in the mould, they should be pulled with only so much force as is necessary to straighten them.

"2. The spermaceti of which the candles are made shall be genuine spermaceti, extracted in the United Kingdom from crude sperm oil, the product of the sperm whale (Physeter macrocephalus). It shall be so refined as to have a melting point lying between 112° and 115° F. An account of the method by which the melting point of the spermaceti is to be determined is given later.

"Since candles made with spermaceti alone are brittle, and the cup which they form in burning has an uneven edge, it is necessary to add a small proportion of beeswax or paraffin to remedy these defects. The best air-bleached beeswax, melting

at or about 144° F., and no other material, shall be used for this purpose, and the proportion of beeswax to spermaceti shall not be less than 3 per cent. nor more than 4½ per cent.

"3. The candles made with the materials above prescribed shall each weigh, as nearly as may be, 1/6 of a pound, and will be found to answer to the following test: Immerse a candle taper-end downwards in water of 60° F., with a brass weight of 40 grains attached to the wick by a small piece of thread; when a further weight of two grains is laid on the butt end of the candle, it will still float, but with a weight of 4 grains it will sink.

"The candles shall be sent to the office of the Gas Referees, by whom samples from each batch will be examined and tested. Each batch of candles shall be accompanied by a specimen of the spermaceti (unmixed with beeswax) which was used in making them.

"Method of Washing Wicks.—As it was found to conduce to the regular burning of candles that the wicks should have been as far as possible cleaned and freed from mineral matters, it is recommended that the candle-maker, before steeping the wicks, shall wash them first in distilled water made alkaline with between 1 and 2 per cent. of strong liquid ammonia, then soak them for several hours in dilute nitric acid containing about 10 per cent. of strong acid, and finally wash them in distilled water made alkaline with a few drops of ammonia.

"Method of Determining the Melting Point of the Spermaceti.—As various methods are used by different refiners of spermaceti for determining the melting point, which lead to different results, it must be noted that the temperatures here given as the limits within which the melting point of a sample of refined spermaceti should fall—viz., 112° and 115° F.—have been found by the following method, which is known as the capillary-tube method:

"A small portion of the spermaceti is placed in a short test-tube, and melted by plunging the lower end of the tube in hot water. A glass tube drawn out at one end into a capillary tube about 1 mm. in diameter is dipped narrow end downwards into the liquid spermaceti, so that, when the tube

is withdrawn, 2 or 3 mm. of its length are filled with spermaceti, which immediately solidifies. The corresponding part of the exterior of the tube also becomes coated with spermaceti, which must be removed.

"The narrow part of the tube is then immersed in a large vessel of water at a temperature not exceeding 110° F. The lower end of the tube, which contains the spermaceti, should be 3 or 4 inches below the surface and close to the bulb of a thermometer. The upper end of the tube must be above the surface, and the interior of the tube must contain no water. The water is then slowly heated, being at the same time briskly stirred, so that the temperature of the whole mass is as uniform as possible. When the plug of spermaceti in the tube melts, it will be forced up the tube by the pressure of the water. The temperature at the moment when this movement is observed is the melting point." (Trustees.)

12. What is Portland cement, how is it made, and what tests should be applied to any given sample to determine its quality?

Ans. The name of Portland cement was first given to a natural hydraulic cement prepared by calcining a limestone containing from 20% to 22% of clay, composed of 1½ to 2 parts of silica to one of alumina, and 78% of carbonate of lime. At present the name is practically confined to a class of artificial hydraulic cements made by thoroughly mixing together in suitable proportions (approximately as above) clay and finely pulverized carbonate of lime (either chalk, marl or compact limestone) burning the mixture in kilns at a high heat and then grinding the burnt product to fine powder between ordinary millstones.

The superiority of Portland cement appears to depend in great measure upon the pressence of the double silica of lime and alumina, which is formed only at a high heat. The weight of Portland cement, as well as its hydraulic energy and its ultimate strength and hardness, is increased by augmenting (within the limit of verification) the intensity and duration of the heat employed in burning. The initial hydraulic activity,

however, is diminished by high burning, so that the best Portland cements are slowest in setting. A cement weighing 100 pounds to the bushel may be burnt so as to weigh 125 pounds to the bushel and its strength will be nearly doubled thereby.

"The properties of a cement which are usually examined to determine its constructive value are: (1) color, (2) weight, (3) activity, (4) soundness, (5) fineness, and (6) strength. The last three are the most important.

"Color. The absolute color of a cement indicates but little. With Portland cement, gray or greenish gray is generally considered best; bluish gray indicates a probable excess of lime, and brown an excess of clay. An undue proportion of under-burned material is generally indicated by a yellowish shade, with a marked difference between the color of the hard-burned, unground particles retained by a fine sieve and the finer cement which passes through the sieve.

"Weight. For any particular cement the weight varies with the degree of heat in burning, the degree of fineness in grinding and the density of packing. Other things being the same, the harder-burned varieties are the heavier. The finer a cement is ground the more bulky it becomes and consequently the less it weighs. Hence, light weight may be caused by laudable fine grinding or by objectionable under-burning.

"The weight per unit of volume is usually determined by sifting the cement into a measure as lightly as possible and striking the top level with a straight edge. In careful work the height of fall is specified. The weight per cubic foot is neither exactly constant, nor can it be determined precisely, and for the practical purpose of the user is of very little service in determining the value of a cement. However, it is often specified as one of the requirements to be fulfilled.

"The following values, determined by sifting the cement with a fall of three feet into a box having a capacity of one-tenth of a cubic foot, may be taken as fair averages for ordinary cements. The difference in weight for any particular kind is mainly due to a difference in fineness:

Portland, English and German. .	77 to 90 pounds per cubic foot.
Portland, fine ground French. . .	69 pounds per cubic foot.
Portland, American.	95 pounds per cubic foot.

"Test of Activity. 'To test hydraulic activity, mix cement with 25 to 30 per cent. of its weight of clean water having a temperature of between 65° F. and 70° F., to a stiff plastic mortar, and make one or two cakes or pats 2 or 3 inches in diameter and about ½ inch thick. As soon as the cakes are prepared, immerse in water at 65° F., and note the time required for them to set hard enough to bear respectively a 1/12 inch wire loaded to weigh ¼ pound, and a 1/24 inch wire loaded to weigh 1 pound. When the cement bears the light weight, it is said to have begun to set; when it bears the heavy weight, it is said to have entirely set.' Cements, however, will increase in hardness long after they can just bear the heavy wire. The activity of the cement is measured by the time which elapses between the time when the first weight is supported and that when the second is just borne."

A committee of the American Society of Civil Engineers recommended the following test for soundness (or the property of not expanding or contracting, or cracking, or checking in setting), fineness and tensile strength.

"It is recommended that tests for hydraulic cement be confined to methods for determining fineness, liability to checking or cracking, and tensile strength; and for the latter, for tests of seven days and upwards, that a mixture of 1 part of cement to one part of sand for natural cements, and 3 parts of sand for Portland cements, be used, in addition to trials of neat cement. The quantities used in the mixture should be determined by weight.

"Sampling. There is no uniformity of practice among engineers as to the sampling of the cement to be tested, some testing every tenth barrel, others every fifth, and others still every barrel delivered. Usually, where cement has a good reputation and is used in large masses, such as concrete in heavy foundations or in the backing or hearting of thick walls, the testing of every fifth barrel seems to be sufficient; but in very important work, where the strength of each barrel may in a great measure determine the strength of that portion of the work where it is used, or in the thin walls of sewers,

etc., every barrel should be tested, one briquette being made from it.

"In selecting cement for experimental purposes, take the samples from the interior of the original packages at sufficient depth to insure a fair exponent of the quality, and store the same in tightly closed receptacles impervious to light or dampness until required for manipulation, when each sample of cement should be so thoroughly mixed, by sifting or otherwise, that it shall be uniform in character throughout its mass.

"Checking or Cracking. The test for checking or cracking is an important one, and, though simple, should never be omitted. It is as follows:

"Make two cakes of neat cement 2 or 3 inches in diameter, about ½ inch thick, with thin edges. Note the time in minutes that these cakes, when mixed with water to the consistency of a stiff plastic mortar, take to set hard enough to stand the wire test recommended by Gen. Gillmore, 1/12 inch diameter wire loaded with one-fourth of a pound, and 1/24 inch loaded with 1 pound. One of these cakes, when hard enough, should be put in water and examined from day to day to see if it becomes contorted or if cracks show themselves at the edges, such contortions or cracks indicating that the cement is unfit for use at that time. In some cases the tendency to crack, if caused by the presence of too much unslaked lime, will disappear with age. The remaining cake should be kept in the air and its color observed, which, for a good cement, should be uniform throughout (yellowish blotches indicating a poor quality), the Portland cements being of a bluish-gray, and the natural cements being light or dark according to the character of the rock of which they are made. The color of the cements when left in the air indicates the quality much better than when they are put in water.

"Fineness. The strength of a cement depends greatly upon the fineness to which it is ground, especially when mixed with a large dose of sand. It is therefore recommended that the tests be made with cement that has passed through a No. 100

sieve (10,000 meshes to the square inch), made of No. 40 wire (Stub's wire gauge). The results thus obtained will indicate the grade which the cement can attain, under the condition that it is finely ground, but it does not show whether or not a given cement offered for sale shall be accepted and used. The determination of this question requires that the tests should also be applied to the cement as found in the market. Its quality may be so high that it will stand the tests even if very coarse and granular; and, on the other hand, it may be so low that no amount of pulverization can redeem it. In other words, fineness is no sure indication of the value of a cement, although all cements are improved by fine grinding. Cement of the better grades is now usually ground so fine that only from 5 to 10 per cent. is rejected by a sieve of 2,500 meshes per square inch, and it has been made so fine that only from 3 to 10 per cent. is rejected by a sieve of 32,000 meshes per square inch. The finer the cement, if otherwise good, the larger dose of sand it will take and the greater its value.

"Sieves. For ascertaining the fineness of cement it will be convenient to use three sieves: viz., No. 50 (2,500 meshes to the square inch), wire to be of No. 35 Stubs's wire gauge; No. 74 (5,476 meshes to the square inch), wire to be of No. 37 Stubs's wire gauge; No. 100 (10,000 meshes to the square inch), wire to be No. 40 Stubs's wire gauge. The object is to determine by weight the percentage of each sample that is rejected by these sieves, with a view not only of furnishing the means of comparison between tests made of different cements by different observers, but indicating to the manufacturer the capacity of his cement for improvement in a direction always and easily with his reach.

"For ascertaining the fineness of sand, two sieves are recommended: viz., No. 20 (400 meshes to the square inch), wire to be of No. 28 Stubs's wire gauge; No. 30 (900 meshes to the square inch), wire to be of No. 31 Stubs's wire gauge.

"Tensile strength. The tests should be applied to the cements as offered for sale. The following table gives the

average minimum and maximum tensile strength per square inch which some good cements have attained:

Age of Mortar When Tested. Clear Cement.	Average Tensile Strength in Pounds per Square Inch. Portland. *Min.*	*Max.*
1 day—1 hour, or until set, in air, the remainder of the time in water	100	140
1 week—1 day in air, the remainder of the time in water	250	550
4 weeks—1 day in air, the remainder of the time in water	350	700
1 year—1 day in air, the remainder of the time in water	450	800
1 Part Cement to 3 Parts Sand.		
1 week—1 day in air, the remainder of the time in water	80	125
4 weeks—1 day in air, the remainder of the time in water	100	200
1 year—1 day in air, the remainder of the time in water	200	350

"If satisfactory results are obtained with a full dose of sand, the trials need go no further. If not, the coarser particles should be excluded by using No. 100 sieve in order to determine approximately the grade the cement would take if ground fine, for fineness is always attainable, while inherent merit may not be.

"Standard Sand. The question of a standard sand seems one of great importance, for it has been found that sands looking alike and sifted through the same sieves give results varying within rather wide limits.

"The material that seems likely to give the best results is the crushed quartz used in the manufacture of sand-paper. It is a commercial product, made in large quantities and of standard grades, and can be furnished of a fairly uniform quality. It is clean and sharp, and although the present price is somewhat excessive (three cents per pound), it is believed that it can be furnished in quantity for about $5 per barrel

of 300 pounds. As it would be used for tests only, for purposes of comparison with the local sands and with tests of different cements, not much of it would be required. The price of the German standard sand is about $1.25 per 112 pounds, but the article, being washed river sand, is probably inferior to crushed quartz. Crushed granite could be furnished at a somewhat less rate than quartz, and crushed trap for about the same as granite; but no satisfactory estimate has been obtained from either of these.

"The use of crushed quartz is recommended by your committee, the degree of fineness to be such that it will pass a No. 20 sieve and be caught on a No. 30 sieve." (Baker, Masonry Construction.)

Unless a testing machine is available it is not always possible to make the tests for strength, and in the ordinary work for which Portland cement is employed in gas works these tests are not really necessary if a good brand of cement is purchased. The tests for fineness and soundness are, however, very easily made, and the latter should always be made on any cement that is to be used, especially in foundation work. (Trustees.)

Sixth Series of Questions—Section of 1910—Practical Class—Trustees Gas Educational Fund.

1. What size of anthracite coal and what size of coke is best suited for use as the fuel in the generator of a carburetted water gas apparatus? Give the reasons for your answer.

2. What are the principles of generator firing as applied to the heating of retort benches, and why is it possible to obtain greater economy of fuel with such firing than with direct firing?

3. Give a description, illustrated with sketches, of one or more forms of oil nozzle for introducing the oil into a carburetted water gas apparatus, and state the points to be observed in the design of such a nozzle, and the conditions of pressure in the oil pipe and adjustment of the opening in the nozzle that gives the best oil results.

4. Give in British thermal units the heating power of a pound, and for gases that of a cubic foot also, of each of the following substances:

Carbon, C	Benzene, C_6H_6
Hydrogen, H_2	Carbon Monoxide, CO
Ethylene or Olefiant Gas, C_2H_4	Methane or Marsh Gas, CH_4
Acetylene, C_2H_2	Ethane, C_2H_6

5. Describe the construction and action of both a single lift gas holder and a telescopic holder. Make sketches to illustrate your descriptions.

6. What is the maximum amount of gas containing 2.60% by volume of carbon dioxide, CO_2, that can theoretically be purified by a bushel of unslaked lime containing 86% by weight of calcic oxide, CaO, assuming that the weight of a bushel is 80 lb., and that carbon dioxide only is to be removed from the gas by the lime? Give all your calculations.

7. What is meant by the expressions "five degree gas liquor" and "eight ounce gas liquor"?

8. A wagon with a body measuring 10 ft. 3 in. in length by 3 ft. 11 in. in width and 2 ft. 0 in. in depth comes for coke. How many bushels will it hold, first, when filled even with the top edges of the sides, and second, when the coke is sloped up to a ridge one foot above the top edges of the sides? Give your calculations.

9. Name and describe one or more of the secondary standards of light that are used in this country to replace candles in determining the candle power of gas.

10. Why is it important to regulate the pressure on street mains?

11. How would you determine the proper size of house piping to be used, when the number of lights to be supplied, and the length of pipe along which they are to be placed, are known?

12. What are the characteristics of a good building brick, and how can a brick be tested to determine whether or not it possesses these characteristics?

Answers to Sixth Series of Questions—Section of 1910—Practical Class—Trustees Gas Educational Fund.

An answer to a problem similar to the one in question No. 6 has already been given on page 206 of Vol. II of the Proceedings. An answer to a question similar to question No. 7 has also been given on page 109 of Vol. II. Answers to questions Nos. 4, 11 and 12 have been published in the previous volumes, and will be found as follows:

No. 4, Vol. I, page 296.
No. 11, Vol. II, page 114.
No. 12, Vol. II, page 248.

The answers to the other questions are as follows:

1. What size of anthracite coal and what size of coke is best suited for use as the fuel in the generator of a carburetted water gas apparatus? Give the reasons for your answer.

Ans. The sizes of anthracite coal that are usually considered available for use as the fuel in the generator of a carburetted water gas apparatus are:

Steamboat, consisting of pieces which pass through a screen in which the bars are set from 4 in. to 7 in. apart, the smaller sizes of coal having previously been screened out.

Broken, consisting of pieces which pass through a screen with a 4 in. mesh, but pass over one with a 2½ in. to 2¾ in. mesh, and

Egg, consisting of the pieces which fall through a screen of 2¼ in. to 2¾ in. mesh, but pass over one with a 1½ in. to 1⅞ in. mesh.

Of these sizes, that known as broken has been found to give the best results for general use, though in very large generators, those over eight feet in diameter, the steamboat size might be better.

The advantages possessed by broken coal are, that the lumps are sufficiently large to maintain the bulk of the fire in an open state, which affords a ready passage to the air in blasting and the steam when making gas, and yet are small enough to

present a large surface of carbon to be acted upon by the oxygen, and it is thus possible to secure the proper combination of the greater portion of both oxygen and carbon in each case. Smaller coal affords a larger total surface, but at the same time forms a large compact mass in the centre of the generator, through which the air and steam cannot pass readily. They therefore pass only through that portion of the area of the generator which lies between the outside wall and this compact mass in the centre. The larger size affords a freer fire, but much less total surface, and has moreover the disadvantage of being harder to handle.

In a paper on the "Selection of Anthracites for Water Gas," read before the American Gas Light Association, October 20th, 1892, Mr. C. R. Collins states that the inactive portion of the fire which is due to the compacting of the coal in the centre of the generator where the lumps can fit into each other more perfectly than they can in the space next the walls "varies with the diameter (of the generator) and with the size of the coal; thus in a particular generator egg coal renders about 30 per cent. of the fire partially inactive, the bulk of the work being done in the outer parts representing 70 per cent. of the fuel; in the same way broken coal affects about 15 per cent. of the fuel bed, while steamboat coal leaves a practically free fire." He also states that steamboat coal presents approximately seven square feet of surface for each cubic foot of generator space; broken coal ten square feet of surface per cubic foot of space, and egg coal twenty-two square feet of surface per cubic foot of space. These figures are for selected coal of the standard size in each case. In practice the steamboat coal will have some broken coal in it, the broken some egg, and so on, and the presence of this smaller coal will increase the size of the inactive portion of the fire as well as the amount of surface presented to the air and steam. It is therefore important that, no matter what size is being used, the smaller pieces and slack should be screened out and not used in the generator, the coal used being kept as near the selected standard size as possible.

The members of the class should read Mr. Collins' paper, which can be found in the Proceedings of the American Gas

Light Association, Vol. X, page 82; in the American Gas Light Journal, Vol. LVII, page 690, and in Progressive Age, Vol. X, page 399.

What has been said above as to anthracite coal applies also to coke. When oven coke is used the large pieces in which it comes from the ovens should be broken up to a size corresponding to broken coal before the coke is charged into the generator. On the other hand, the coke after being broken should be picked up with a fork in such a way as to leave behind the small pieces and dust which should not be used in the generator.

When coke made in coal gas retorts is used it does not require any breaking, but must be picked up with a fork to avoid the pressence of small pieces and dust. It must be remembered that a fork can easily be used in such a way as to pick up almost as much fine stuff as a shovel, and that when loading coke which is to be taken to the generator the fork should be well shaken, while the coke is on it, for the purpose of dislodging the dust and small pieces that are held between the larger pieces as they are picked up. (Trustees.)

2. What are the principles of generator firing as applied to the heating of retort benches, and why is it possible to obtain greater oconomy of fuel with such firing than with direct firing?

Ans. The basic principle of generator firing for retort benches is the division of the combustion of the fuel into two stages. The first of these, brought about in the furnace proper, results in the formation of a combustible producer gas, and the second consists in the burning of this gas in a combustion chamber provided for the purpose in the setting. To secure the best results, both as to the temperature that can be attained in the setting and as to economy of fuel, the amount of chimney draft and the total amount of air supplied for the combustion must be closely regulated, and the proper proportion must be maintained between the portions of the total amount used respectively for primary air, or air admitted into the furnace, and for secondary air, or air admitted into the combustion

chamber. The amount of primary air should be such as to form a good producer gas containing a maximum of carbon monoxide and a minimum of carbon dioxide, and that of the secondary air should be just sufficient to secure the complete combustion of this producer gas.

When solid fuel is completely consumed in one stage it is difficult to secure intimate contact between the carbon of the fuel and all the oxygen of the air supplied for its combustion, and for this reason, to secure even approximately complete combustion of the carbon, it is necessary to pass through the fire an amount of air largely in excess of what would be required if all the oxygen could be brought into contact, and made to combine, with carbon. In practice it is found that in direct fired retort benches it is necessary, in order to secure approximately complete combustion of the fuel, to use, even under good conditions of working, between two and three times as much air as is theoretically required. The excess of air has to be heated up to the temperature of the furnace, and, since it is still highly heated when it leaves the setting, it carries away a large amount of heat which is thus wasted and the loss of which calls for the use of more fuel than would otherwise be necessary.

With a generator furnace only partial combustion of the fuel while in a solid state is desired, and this is effected with a limited supply of air, and the combustion is completed with the fuel in a gaseous state. In the case of a gas, intimate contact between the combustible and the oxygen of the air can be secured and the combustion can be made complete by the use of a very small excess of air over and above that theoretically required, this excess being as low as ten per cent. of the theoretical amount. There is thus a much smaller quantity of extra air to be heated up to escape while hot, and enough heat is saved in this way to make quite a difference in the quantity of fuel required for a given amount of work.

With a generator furnace it is also possible to have the combustion take place in closer proximity to the retorts, and therefore to have the heat produced act more effectively upon them than can be done with a direct fire furnace, and this leads to a further saving in fuel. (Trustees.)

3. Give a description, illustrated with sketches, of one or more forms of oil nozzle for introducing the oil into a carburetted water gas apparatus, and state the points to be observed in the design of such a nozzle, and the conditions of pressure in the oil pipe and adjustment of the opening in the nozzle that give the best results.

Ans. The oil nozzle or spraying device illustrated by Figure No. 1 on the accompanying cut is one that is extensively used

OIL SPRAYS FOR CARBURETTED WATER GAS APPARATUS

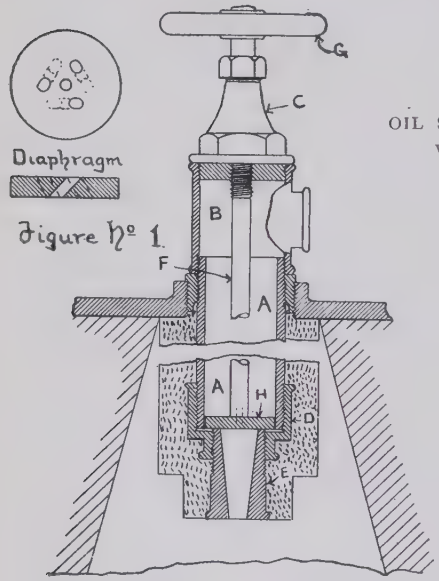

Figure No 1.

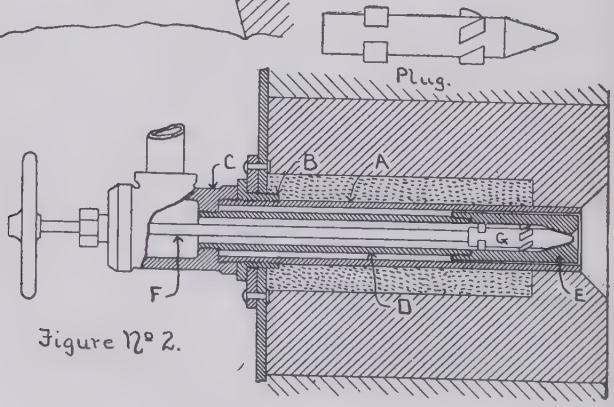

Figure No 2.

on double superheater carburetted water gas sets. It is mounted on the top plate of the carburetter neck and delivers the oil downward.

According to the patent specifications its principal features are "a sectional casing, a diaphragm provided with inclined openings for imparting rotary motion to the jets or streams of liquid hydrocarbon as they are discharged from the casing, and means for adjustably seating said diaphragm."

The casing is formed of a cast iron tube, A, with an external thread at each end, a cast iron tee, B, screwed on the upper end of the tube, a stuffing box, C, secured into the upper opening of the tee, a reducing coupling, D, screwed on the lower end of the tube, and a nozzle, E, screwed into this coupling.

Through the stuffing box passes a steel spindle, F, which works in a thread cut in the bottom of the box in the same manner as an ordinary valve stem. On the upper end of this spindle is fastened a small handwheel, G, by which it can be easily turned and thus raised or lowered. To the lower end is fastened the diaphragm, H. This diaphragm is faced so as to make a tight joint with the upper edge of the nozzle, E, this edge being also faced and made to project above the bottom of the coupling so as to form a seat for the diaphragm. In the latter are drilled holes inclined at an angle to its face as shown in the enlarged plan and section of it given on the cut. The number and size of these holes are varied to suit the size of the set on which the nozzle is to be used, since the quantity of oil that has to be passed in a given time depends upon the rate at which gas is made, that is, upon the size of the set. The lengths of the tube A and the spindle F are also made to suit the length of the carburetter neck, the bottom of the nozzle being brought either just even with or a trifle below the level of the carburetter head.

After being put together the spraying device is fastened to the plate covering the neck of the carburetter by means of a bushing. The parts exposed to the heat inside the carburetter are protected by being wrapped with asbestos wick.

The oil supply pipe is connected to the side outlet of the tee, B.

When oil under pressure is supplied to this device with the diaphragm pressed tightly down upon the nozzle, it can pass only through the inclined openings in the diaphragm. It issues from these at a high velocity, and, striking against the circumference of the nozzle at an angle, is given a rotary motion which causes it to spread out in a spray as it leaves the nozzle and distribute itself over the whole surface of the cross section of the carburetter. The extent to which the spray will spread out is controlled by raising the diaphragm from its seat and thus allowing more or less of the oil to pass around its circumference instead of through the holes. The oil thus passed around, if not in too large quantity, will be broken up and given a rotary motion by the jets coming through the holes, but the doing of this work will absorb some of the energy possessed by the jets and will thus reduce the velocity of rotation of the oil and therefore the extent to which the spray will spread.

Another form of spray which is used on carburetted water gas apparatus of a different make from that using the form described above is illustrated in Figure No. 2 on the cut. It is mounted on the side of the carburetter or superheater and delivers the oil horizontally.

This form differs from the one previously described principally in the use of a plug instead of a diaphragm for giving the oil a rotary motion.

The outer casing tube, A, is made of wrought iron pipe and is threaded externally at one end only. Over this end is screwed a bushing, B, run far enough down to leave sufficient thread to allow the recessed end of a tee, C, to be screwed on the tube. In a smaller thread at the same end of the tee is screwed the outer end of the inner tube, D, which tube is threaded externally at both ends. On its inner end is screwed a steel nozzle, E. The tee, C, is provided with a stuffing box through which passes a spindle, F, similar to the one described above.

To the inner end of the spindle is fastened a plug, G, an enlarged view of which is also shown on the cut. It is made with a cylindrical body, with one end cut off square and the other made conical, and is provided with two sets of lugs

which serve to break up the oil and give it a rotary motion. The conical end of this plug fits against a conical seat in the nozzle and thus serves as a valve by which the flow of oil can be controlled. The lugs nearest the square end of the plug have their longitudinal edges parallel to the axis of the plug, while those nearest the conical end have their edges at an angle with the axis and are so placed around the circumference that the ends towards the first set come opposite the openings between the lugs of that set. Both sets of lugs fit closely against the circumference of the recess in the nozzle so that all the oil has to pass through the spaces left between the lugs themselves.

The operation of the device is similar to that of the one first described. When oil is to be introduced into the apparatus the plug is drawn off the seat in the nozzle far enough to permit the oil to pass at the required rate. Oil is then forced under pressure through the inner tube until it strikes the lugs, and in passing between them is first broken up and then deflected so that it strikes against the conical portion of the nozzle at an angle, and is thus given a rotary motion which causes it to form a spreading spray as it issues from the nozzle orifice.

The main points to be observed in the design of an oil nozzle to be used for introducing oil into a carburetted water gas apparatus are that it shall produce a good spray the spread of which is under control, that the parts that produce the spray shall be kept as much away from exposure to heat as possible, and that these parts shall be so constructed that they will continue to work well even if they become slightly warped under the influence of the heat. The design should also be such that the nozzle can be readily withdrawn and new parts substituted for any that may become injured or worn out. Operators vary in their ideas as to the proper pressure to be used even with the same nozzle, but twenty pounds per square inch may be taken as a good pressure, and the opening between the diaphragm or the plug and its seat should be such that the nozzle will pass the required amount of oil with this pressure and at the same time produce a spray that will spread so as

to cover the full cross section of the carburetter before it reaches the top of the checker brick. (Trustees.)

5. Describe the construction and action of both a single lift gas holder and a telescopic holder. Make sketches to illustrate your descriptions.

Ans. "A gas holder consists of a tank generally built of brick work or steel, and containing water, and a cylindrical vessel made of wrought iron sheets, open at the bottom but closed on top, and so guided in the tank and along the columns rising above the tank as to work freely up and down. This guiding is performed by rollers or wheels attached at equal distances around the top and bottom of the cylinder, working against rails or channel irons fastened to the inside wall of the tank and to the columns. The tops of the columns are joined by girders. Gas is admitted to and drawn from the cylindrical vessel or holder proper by pipes passing down under the foundation of the tank and up to a point above the water level. When gas is admitted to the holder through the inlet pipe it enters the space between the closed top or roof and the water which seals the open bottom. As the gas enters, the pressure increases until it is sufficient to overcome the weight of the holder, which then begins to rise and continues to do so as long as gas is entering. Gas is drawn out by opening the outlet valve, when the weight of the holder forces the gas out and the holder falls. When gas is being sent into and drawn from the holder at the same time, the holder will rise when the volume of gas entering is greater than that leaving it, and fall when this condition is reversed."

In a "telescopic" holder the inner section is exactly the same as a single lift holder, except that it is finished at the bottom with a "cup" instead of an angle iron "curb." The "cup" is an angular trough, the inner side being formed by the bottom sheet of the inner section, and is usually rectangular in cross section. Its construction is shown by the cut. The outer sections are merely cylindrical shells of larger diameter than the inner section, and of about the same height. At the

top is fastened a "grip," which is the same as a cup turned upside down, as shown on the cut. The bottom is finished with another "cup" if the section is an intermediate one in a series, or with a "curb" if it is the outside one of the series.

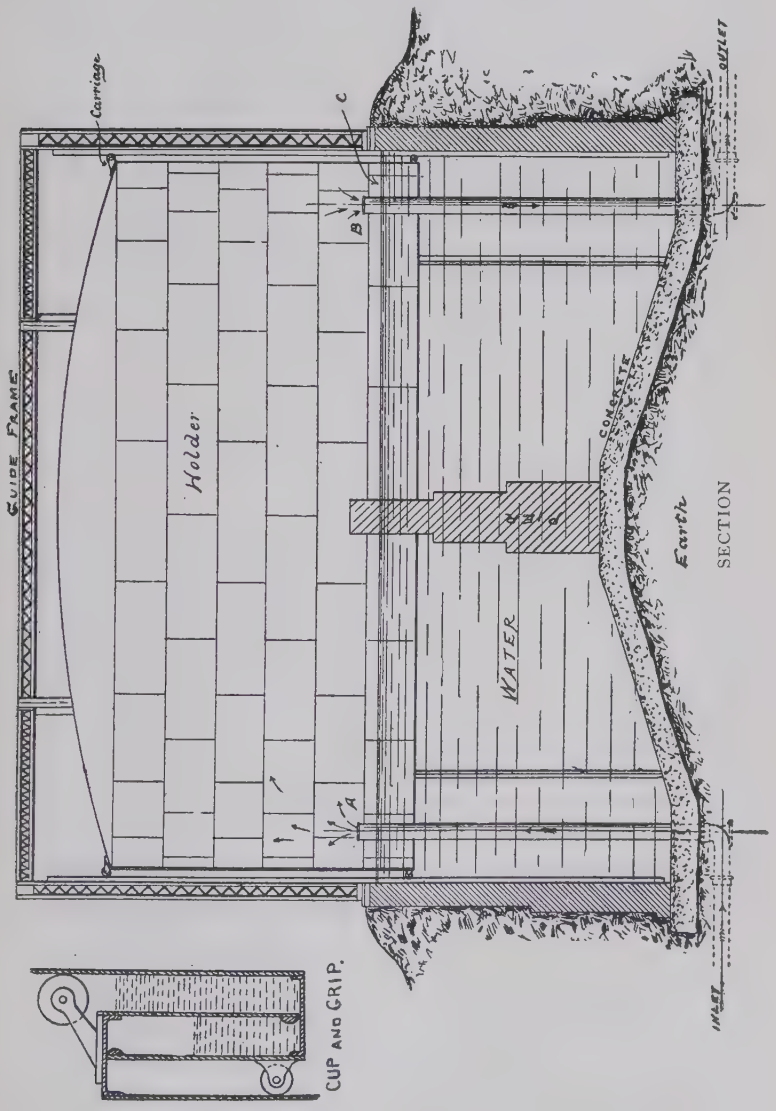

The action of the inner section is similar to that of a single lift holder. When this section is completely filled with gas the cup filled with water engages the grip of the next section, and as gas continues to flow into the holder, raises this section, the water in the cup forming a seal which prevents the escape of any gas. When the holder descends after both sections have been raised, the outer section lands on the bottom, and the inner section continuing to go down, the cup and grip separate, and the action is again that of a single lift holder.

The cups of telescopic holders are guided by wheels bearing against plates riveted on the sides of the outer sections, the grips of the outer sections are guided by wheels bearing against the guide framing, the height of which is usually made equal to the combined height of all the sections, and the curb of the outermost section is guided by wheels bearing on rails or plates fastened to the tank wall.

The capacity of a two lift telescopic holder is double that of a single lift holder of the same diameter, that of a three lift three times that of a single lift, and so on. (Trustees.)

8. A wagon with a body measuring 10 ft. 3 in. in length by 3 ft. 11 in. in width and 2 ft. 0 in. in depth comes for coke. How many bushels will it hold, first, when filled even with the top edges of the sides, and second, when the coke is sloped up to a ridge one foot above the top edges of the sides? Give your calculations.

Ans. The volume of the wagon body, and therefore the volume of the coke contained in the wagon when it is filled even with the top edges of the sides, is 10.25 ft. $\times$ 3.917 ft. $\times$ 2 ft. $=$ 80.30 cu. ft. The volume of the standard bushel for measuring coke, which is given in the answer to question No. 7 of the Fifth Series, is 1.5901 cu. ft., so the wagon when filled even with the top of the sides will hold $\frac{80.30}{1.5901} = 50.50$ bushels.

When coke is sloped up above the sides to a ridge one foot above their top edges, there is added to the volume of the wagon box an additional volume which is that of a wedge

having the shape shown on the sketch. The volume of a wedge is obtained by adding to the length of the edge twice the length of the base and multiplying this sum by one-sixth of the product obtained by multiplying the height by the breadth of the base. In the present instance, assuming the slope to be such

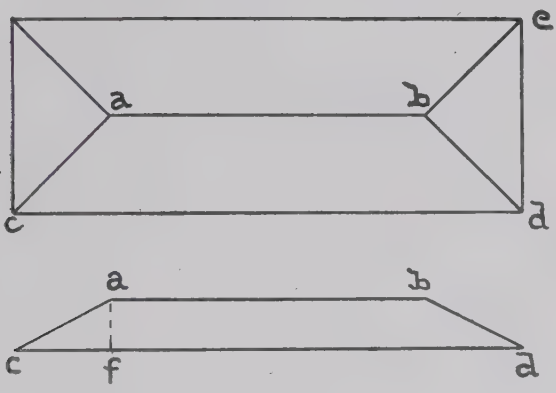

that the base of the triangle a c f is twice the altitude, the length of the edge, a b, is 6.25 ft., the length of the base, c d, is 10.25 ft., the breadth of the base, d e, is 3.917 ft., and the height or altitude, a f, is 1 ft. The volume of the wedge is therefore $[6.25 + (2 \times 10.25)] \times 1/6\ (3.917 \times 1) = 26.75 \times 0.653 = 17.47$ cubic feet, and the total volume of coke held by the wagon when loaded in this way is $80.30 + 17.47 = 97.77$ cubic feet, or $\frac{97.77}{1.5901} = 61.49$, or in round numbers, sixty-one and a half bushels. (Trustees.)

9. Name and describe one or more of the secondary standards of light that are used in this country to replace candles in determining the candle power of gas.

Ans. The secondary standards of light that are most frequently used in this country to replace candles in determining the candle power of gas are the Edgerton Standard and the 10 candle power Pentane Lamp.

The Edgerton Standard is formed by surrounding the 7

in. × 1¾ in. chimney of a Sugg D Argand burner with a blackened brass sleeve 2 in. in diameter, and thus cutting off from the photometer disk all the light given by the burner flame except that portion which passes through a horizontal slit in the sleeve. This slit is 13/32 in. high, has its lower edge ⅞ in. above the top of the steatite ring forming the burner tip, and extends a sufficient distance around the circumference of the sleeve to make it certain that it will give an opportunity for light to reach the disk from the full width of the flame. Directly opposite this slit on the other side of the sleeve another slit of the same size is cut out to prevent any light being reflected from the interior of the sleeve to the disk. A vertical slit running out of the horizontal one just mentioned is also made in the back of the sleeve to form an opening through which the height and appearance of the flame can be observed.

The theory of the standard is that when the burner is kept in good condition and the flame is adjusted to a height of 3 in., a constant amount of light will pass through the slit in spite of variations in the quality of the gas supplied to the burner as long as these variations are not greater than would ordinarily be met with in the supply from any one works. It has been found by experiment that this standard shows the most constant value when the axis of the flame is set ⅞ in. farther from the middle point of the bar than the normal; that is, when the axis of the flame lies ⅞ in. behind the plane passing through the plumb lines marking the position of the standard light. The value of the standard is of course not the same when used at different works with entirely different qualities of gas, but once standardized by a series of observations against candles at any works, its value may be assumed to be constant unless extraordinary variations occur in the candle power of the gas supplied. Mr. Rollin Norris, in a paper on "Some Experiments with the Edgerton Standard," read before the American Gas Light Association at the meeting held October 18, 1899, states the following conclusions as the result of a number of tests made with coal gas and carburetted water gas of different qualities:

"Referring to the Edgerton Standard in its present design,

the general conclusions to be drawn from the experiments which I have detailed above are that with water gas the value of the Edgerton is independent, within wide limits, of the candle power of the gas used in it; that with coal gas the value varies with the value of the gas burned, the change being about 10 per cent. of the change in value of the gas used; that with either coal gas or water gas, if the Edgerton be carefully standardized for the conditions under which it is to work, it may be relied upon to give results whose error will not exceed 1½ candles, while a large majority of the observations will be correct to within one candle of the value of the gas."

Some experiments reported by Mr. Alten S. Miller for the Research Committee of the Association show that when an Edgerton Standard was not touched after being standardized, the maximum variations under working conditions between its values as determined against candles at different times did not exceed 2.5 per cent., but that it was necessary to re-standardize it if it was disturbed in the slightest degree.

While the Edgerton Standard may be open to objection for photometrical work where extreme accuracy is required, it is very valuable for the purpose of making frequent candle power determinations to check the manufacturing operations at a gas works.

The ten candle power Pentane Lamp in use in this country is a modification of the original Harcourt ten candle Pentane Lamp, which was designed by Mr. A. Vernon Harcourt, and is the standard of light officially adopted by the London Gas Referees for the testing of the gas supplied by the three metropolitan gas companies.

The modifications in the American lamp consist in the use of a brass tube instead of a rubber tube to carry the mixture of air and pentane vapor from the saturator to the burner, and the insertion in this tube of a small pet cock by means of which the flow of the current of air and vapor can be started if necessary at the time the lamp is lighted, and of a micrometer cock by which the height of the flame can be regulated. All the other parts of the American lamp are the same in design and dimensions as the similar parts of the original Harcourt lamp.

As indicated above, the material burned in this lamp is air saturated with the vapor of pentane, pentane being a distillate produced from petroleum by rectifying gasoline in the manner set forth in the instructions of the London Gas Referees.

The saturator containing the pentane is a square box made of tin plate and is placed upon a bracket fastened to the top of the tube carrying the burner bracket and the chimney and the tube surrounding the chimney. On top of the saturator at each of the two front corners is fastened a stop cock, the one on the left being provided with a funnel and serving both for filling the saturator with pentane and for the air inlet, and the one on the right forming the outlet for the vapor-saturated air. On the inside of the top plate are fastened seven partitions, the lower edges of which do not quite touch the bottom, but are sealed in the pentane as long as this is maintained at the proper height. The partitions are so arranged that when they are sealed, the air cannot pass directly from the inlet to the outlet, but is forced to travel back and forth across the box eight times, and thus becomes fully saturated with pentane vapor before it reaches the outlet. A glass window is provided in the front of the saturator to enable the operator to see the height at which the pentane stands and thus know when it is necessary to put in a fresh supply.

The brass tube connecting the outlet of the saturator with the burner rises a few inches above the outlet stop cock and then bends over and drops to a point opposite the bottom of the burner, where it makes a right angle turn and runs horizontally to the burner. It is provided with unions at each end to enable it to be easily disconnected, with a pet cock in the bottom outlet of the tee by which the turn to the burner is made, and with a micrometer cock, by which the height of the flame is regulated, on the horizontal run next to the burner.

The burner is an Argand burner with a steatite ring having an outer diameter of 0.945 in. and an inner diameter of 0.551 in. and containing thirty holes, each 0.049 in. in diameter. The supply of air to the outside of the flame is regulated by means of a conical hood, which also acts as a screen to hide the flame except on the side toward the disk, and that to the inside is furnished by means of an outer tube around the chimney

tube in which an upward current of air is induced by the heat of the chimney. This current passes from the top of this outer tube into a box which carries it across to the inside of the tube to which the saturator and burner brackets are fastened and then descends this tube to the hollow burner brackets through which it passes to the bottom of the burner and thence up inside of the ring to the flame. The burner is placed on the opposite side of the stand from the saturator, and with the top of the steatite ring about 15½ in. below the bottom of the saturator.

The brass chimney tube is set when the lamp is cold with its lower edge 1.85 in. above the top of the steatite ring. At the bottom of the chimney is a talc or mica window through which the height of the flame can be observed.

The chimney tube is surrounded by an outer tube for the purpose of supplying air to the inside of the flame as described above, the lower edge of this tube being about 2½ in. above the lower edge of the chimney. The bottom of the tube carrying the saturator and burner brackets and the outer tube and air box fits over the end of a rod and rests on a ring clamped to this rod which is mounted on a tripod having a leveling screw at the end of each leg.

When it is to be used the lamp should be placed on the photometer table and adjusted by the leveling screws and the ring on the stand so that the supporting tube is vertical, the top of the steatite burner ring is 0.93 in. lower than the centre of the photometer disk, and the centre of the ring lies in the line formed by the intersection of the plane of the plumb lines marking the position of the standard light and the vertical plane containing the axis of the bar. The chimney must then be accurately centered over the burner and set at the proper height above it. A wooden block 1.85 in. high is provided for setting the chimney at the right height, the adjustment being made by setting the block on the steatite ring and lowering the chimney until it just rests upon the top of the block without binding it.

After the lamp is properly adjusted the saturator is filled about two-thirds full of pentane. As pentane is very inflammable and gives off, even at comparatively low atmos-

pheric temperatures, a vapor which is heavier than air and consequently falls through the air, the saturator must never be filled when the lamp is lighted, nor should any other light be brought near it when it is open. When filling the saturator the vapor tube should be disconnected from the outlet stop cock and this stop cock opened to serve as a vent for the air displaced. When the saturator is filled to the proper height the stop cocks should be closed and the tube connected.

The micrometer cock is then closed and both stop cocks on the saturator opened full. (At temperatures of 80° F. or above, the pentane when under atmospheric pressure will give off vapor faster than it is required by the burner and the vapor will issue from the air inlet if this is open. Under these conditions the inlet cock must be kept closed to avoid the danger of having the vapor that would otherwise escape into the air ignite at the burner and cause a fire. The burner is then fed with pentane vapor unmixed with air, but this does not seem to affect the amount of light given by it.) The pet cock at the bottom of the tube is then opened to start the flow of vapor saturated air, the palm of one hand being held below the cock to note by the feeling of coldness produced at the point where the vapor strikes the skin whether a current exists. If the current is not started by the mere opening of the pet cock it can be started by placing the mouth over the opening and sucking. When it is started the pet cock is closed and the micrometer cock opened while a lighted match is held over the burner until the pentane lights. The flame should then be turned up until it nearly enters the chimney and the lamp allowed to heat up, as it will not be possible to make the final adjustment of the height of the flame until it has been burning for from twenty minutes to half an hour. The English regulations require the lamp to have been burning with the flame at nearly its proper height for at least ten minutes before a test is made.

The final adjustment is made by setting the flame as low as it is possible to have it without having any part of the openings between the three tips forming its top show below the chimney. A good way to get the proper adjustment is to start with the flame a little low; that is, with the lower angles

of the openings just showing below the chimney, and with the gas to be tested burning at the proper rate. The photometer disk is then set so that the illumination is equal on both sides, as in making a test, the pentane flame turned up a little, the disk set again, and so on. At first the turning up of the pentane flame will cause it to give more light, and the disk will have to be moved toward the gas flame, but a point will soon be reached when the further turning up of the pentane flame causes it to give less light, as will be shown by having to move the disk away from the gas flame. The height at which the pentane flame is thus found to be giving the most light is that at which it should be adjusted, and it should be watched to see that it remains at this height throughout the test.

This Pentane Lamp has been found to be a very reliable standard, and after a little experience with it, it is much more convenient to use than candles. Each lamp must, however, be first standardized by an extensive series of observations against candles, as none of them give a light of exactly ten candles.

An illustrated description of the Harcourt lamp, giving the dimensions of all parts and also specifications of the manner in which the pentane is to be prepared and tested, can be found in the Proceedings of the American Gas Light Association, Vol XVI, page 34; in the American Gas Light Journal, Vol. LXXI, page 733, or in Progressive Age, Vol. XVII, page 519. (Trustees.)

10. Why is it important to regulate the pressure on street mains?

Ans. "Because a heavy pressure on the mains and services increases the leakage, and, therefore, is not desirable. But in order to insure a sufficient supply to all the consumers, the gas must be delivered from the works at a higher pressure during the hours of the greatest consumption than is necessary at other times. The pressure on the mains should be so regulated as to meet the varying demand throughout the twenty-four hours, with a minimum loss from leakage, and to insure economy at the burner."

Tenth Series of Questions—Section of 1909—Practical Class—Trustees Gas Educational Fund.

1. How does the crude petroleum found at Beaumont, Tex., differ in its physical and chemical characteristics from the crude petroleum found in Pennsylvania?

2. Give a description, illustrated with sketches, of the construction of the drum of a station meter and the manner in which it is mounted in the case, and explain how it measures the gas.

3. Boilers are often rated as being of so many horse power. What is the meaning of the term "horse power" when used in this connection? What is the meaning of the same term when applied to steam engines?

4. What are the factors in steam boiler construction which influence the efficiency of the boiler?

5. How many square feet of radiating surface should be allowed per 1,000 cubic feet of gas to be handled per twenty-four hours in rating the capacity of atmospheric condensers and of multitubular water condensers?

6. Explain the method of calculating the theoretical flame temperature of a gas, and as an example calculate that of the illuminating gas with the following composition by volume:

Carbon Dioxide	CO_2	2.4%
Oxygen	O_2	0.5%
Heavy Hydrocarbons		12.9%
Carbon Monoxide	CO	31.1%
Hydrogen	H_2	32.9%
Marsh Gas	CH_4	13.4%
Higher Paraffins	$C_n H_{2n+2}$	2.3%
Benzene Vapor	$C_6 H_6$	0.7%
Nitrogen	N_2	3.8%

It is assumed that combustion takes place in air and that

the heavy hydrocarbons are Olefiant Gas, C_2H_4, and the higher paraffins are Ethane, C_2H_6. (See answers to questions No. 5, Seventh Series; No. 4, Eighth Series, and No. 5, Ninth Series.)

7. Why does the ignition of a mixture of gas and air in the proper proportions produce an explosion?

8. What is the maximum amount of gas containing 1.4% by volume of carbon dioxide, CO_2, and 0.95% by volume of sulphuretted hydrogen, H_2S, that can theoretically be purified by a bushel of unslaked lime containing 88% of calcic oxide, CaO, assuming that the weight of a bushel is 80 lb. and that both the carbon dioxide and the sulphuretted hydrogen are to be removed by the lime. Give all your calculations.

9. Assuming that you had satisfied yourself that the distributing system of the gas plant under your charge was in bad condition as to leakage, how would you proceed to locate the leaks and put the system in good condition?

10. Give a description, illustrated by sketches, of the manner in which you would connect a consumer's meter of the ordinary size (three to ten lights) to the end of the service and to the house riser, and also the manner in which you would support the meter.

11. Give a description, illustrated with outline sketches, of the connection of a circulating water heater to a vertical hot water boiler. Assume that the boiler is already connected to a coal range.

12. What tests would you apply to a fire brick to determine its quality?

Answers to Tenth Series of Questions—Section of 1909—Practical Class—Trustees Gas Educational Fund.

Answers to questions Nos. 3 and 12 have already been published in a previous volume of the Proceedings, and can be found as follows:

No. 3, Vol. II, page 202.
No. 12, Vol. II, page 212.

The answers to the other questions are as follows:

1. How does the crude petroleum found at Beaumont, Tex., differ in its physical and chemical characteristics from the crude petroleum found in Pennsylvania?

Ans. The crude petroleum found at Beaumont, Texas, differs from Pennsylvania crude petroleum in specific gravity, color, flashing point and viscosity, and also in its ultimate chemical composition, especially as to the amount of sulphur it contains, the percentage of the total volume distilled between various temperature limits when the oil is subjected to fractional distillation, and the nature of the hydrocarbons of which it is composed.

The specific gravity of Beaumont crude petroleum is from 0.910 to 0.920, that of Pennsylvania petroleum from about 0.78 to 0.88, the average being about 0.83. The color of the former is a dark brown, that of the latter is usually either green or amber, although some samples are brown. The flashing point of Beaumont oil is higher than that of Pennsylvania oil. The former is less fluid than the latter.

According to the following table showing the ultimate chemical composition of samples of both Beaumont and Pennsylvania petroleum, the former contains less carbon and hydrogen, but considerably more sulphur than the latter.

	Beaumont	Pennsylvania.
Carbon	85.03%	86.10%
Hydrogen	12.30%	13.90%
Sulphur	1.75%	0.06%
Oxygen and Nitrogen....	0.92%	

The percentage of sulphur given for the Pennsylvania oil is rather smaller than usual, but this oil never contains more than 0.5% of sulphur. In the case of the Beaumont oil it is what may be called fixed sulphur, and in addition the oil, when fresh, contains, in solution, sulphuretted hydrogen, which is largely lost on standing, and can be almost completely eliminated by blowing air through the oil. If this sulphuretted

hydrogen is included, the sulphur amounts to slightly more than 2%.

The volumes of the fractions distilled off at various temperatures and the temperature at which distillation begins in the two kinds of oil are:

	Beaumont.	Pennsylvania.
Distillation begins.....	230° F.	176° F.
Below 302° F.....	2.5	21.0
Between 302° and 575° F.....	40.0	41.0
Between 575° and 662° F.....	20.0	14.0
Between 662° and 752° F.....	25.0	23.0

Very little Beaumont oil distills over at temperatures below 300° F. and it produces no naphtha, but after this temperature is reached the percentages passing over between the same temperature limits up to 752° F. (400° C.) do not differ very materially in the two cases. But while the percentages are very nearly the same the fractions from the Beaumont oil are much heavier than the corresponding ones from the Pennsylvania oil, and up to the present there is no reason to believe that the fraction given off between 302° and 575° F. can be refined so as to be available for use in lamps, and therefore the chief field of usefulness for Beaumont oil will probably be as a fuel oil and a gas oil.

The residues left after the fractional distillation of the two kinds of oil differ from each other very much. That from Pennsylvania oil contains paraffin scales and is not sticky enough to be pulled out in strings. That from Beaumont oil, although not strictly asphaltic, resembles an asphalt and is plastic. This residue amounts to about 6% by volume of the original oil.

As far as the determination of the nature of the hydrocarbons of which Beaumont oil is composed has gone, it has been shown to contain much larger quantities of unsaturated hydrocarbons and smaller quantities of saturated hydrocarbons or paraffins than the Pennsylvania oil, but the exact composition of these hydrocarbons has not been determined as yet. (Trustees.)

2. Give a description, illustrated with sketches, of the construction of the drum of a station meter and the manner in which it is mounted in the case, and explain how it measures the gas.

Ans. Figure 1 represents the elevation of one of the measuring chambers of the meter drum. One of the partitions "P" is shown, the other being represented by dotted lines. The inet and outlet passages, which are long narrow openings, shown in section in Figure 3, are indicated by the letters "I" and "O." For the purpose of illustration, we will suppose this vessel to be supported by suitable bearings, placed within a small tank, in which it can freely revolve, the tank being filled with water to the dotted line. As represented, both the inlet, "I," in front, and the outlet, "O," at the back, are sealed by the water, consequently the air therein cannot escape. If now the vessel be slowly turned by hand in the direction of the arrow, the outlet, "O," will become unsealed, and the air will be gradually expelled and replaced by the water as the vessel is immersed. Continuing the operation, air will enter by the inlet, "I," the vessel will gradually rise, and when attaining the position represented will be again filled with air. This is precisely the action which takes place with each chamber of the meter drum, of which there are four attached to one common shaft, each chamber being provided with its corresponding inlet and outlet, and being filled and emptied in succession as described.

Figure 2 is a drawing of a meter drum, either the front or back, showing the passages to the various compartments; but it is evident that if this were placed within the case without the means of separating the inlet from the outlet passages, it would be inoperative. This separation is accomplished by two very simple contrivances, known as the "hollow cover" and "spout," which were the invention of John Malam.

Figure 3 represents the case of a station meter in cross section, with a side view of the drum, which revolves with the axle "a"; it also shows the interior of one of the measuring chambers, the hollow cover "q," in section, and the spout "r." The hollow cover is a concave disc, soldered round its edges

to the drum, and has at its centre a circular orifice through which the spout is admitted. The spout is a bent pipe securely attached to the outer case, but completely isolated from the drum, and enters the hollow cover, its top extending a short

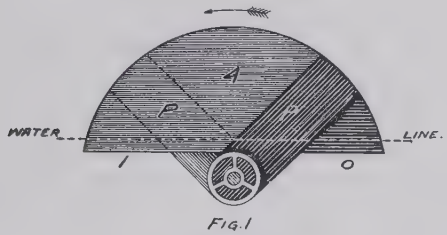

FIG. 1

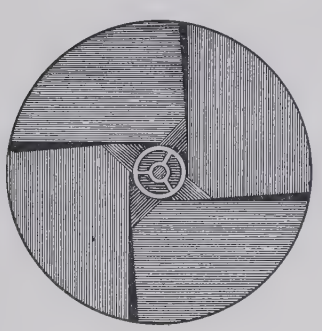

FIG. 2

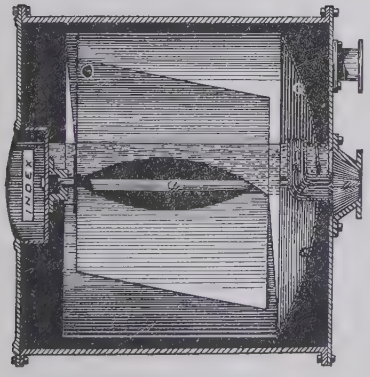

FIG 3.

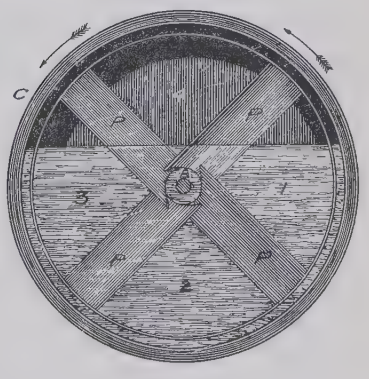

FIG. 4.

STATION METER DRUM

distance above the water-line. The openings in the centre of the drum are for the purpose of allowing the water to flow freely into and out of the various chambers as the drum revolves; these, as well as the orifice in the hollow cover, are sealed by the water, as shown in the drawing. Thus, the gas entering the meter in the direction of the arrow passes into the hollow cover, whence it is conveyed to the various inlet passages into the respective chambers, and as each of these is filled in rotation, the gas is expelled from the one preceding.

Figure 4 shows another section of the same meter. The case, "C," is charged with water to the required height as indicated. The drum is divided into four distinct measuring chambers, numbered 1, 2, 3 and 4, by means of the partitions "P P P P," which are placed at angles with the line of the axle, for the purpose of diminishing and equalizing their resistance when passing through the water. If the partitions were placed parallel with the axle, the obstruction would be such as to render the instrument uncertain in its registration, on account of the excessive oscillation of the water in the case.

As already represented in Figure 1, the chamber, when in the position of that numbered 4, is filled with gas, its inlet and outlet being both sealed by the water. If we now suppose the meter to be in action, the gas will enter the chamber 1, and when filling will cause the drum to revolve in the direction of the arrows, expelling in the first place the gas from chamber 3, so that when the outlet of 4 rises above the water, the gas will issue from that chamber. In the meantime, the chamber marked 1 gradually rises, increasing in capacity, and when this is nearly full of gas, chamber 2 comes into operation. This action is continuous, all the chambers being filled in rotation, at the same time expelling the gas from those preceding them. Here the method of giving motion to the drum by hand, as proposed when describing Figure 1, is superseded by the force or pressure of the gas; and so long as this is maintained, and any supply issues from the meter, its action is continuous.

Hence the contents of one revolution of the drum being known—say, 20 cubic feet—it can be readily understood how,

by simple gear work, such as wheels and pinions, the quantity of gas passing will be recorded on the index with the most unerring accuracy during a period of many years, depending on the endurance of the instrument, and the maintenance of the water-line at the proper height.

When constructing meter drums, their approximate capacity is obtained by calculation; but the exact position of the water-line is ascertained by experiment. It is then carefully marked on the front of the case, so that in the event of the gauge being broken or lost, the mark is always retained. With the same object, some manufacturers attach a brass plate to the case, having the words "water-line" engraved thereon; others have it marked on a brass tube which surrounds the glass of the gauge, a space being left for observation.

The causes of the friction or pressure required to work a meter are not generally understood, hence we find that various appliances have, from time to time, been patented in order to diminish it. Amongst these, glass bearings for the axles have been proposed; but it must be evident, from the great facility with which a meter wheel revolves in its case when empty, and the difficulty with which it moves when charged, that the cause of the obstruction must be the water.

As already stated, the partitions are placed at angles; therefore, in revolving in the water, they form a kind of vane or screw, and whilst in action continuously draw a portion of water through the centre opening, which water is expelled at the back of the wheel. A similar result, although in a very slight degree, is effected by the inlet and outlet hoods, in consequence of their angular position. Under these circumstances, therefore, the orifice in the hollow cover should be made as ample as possible, in order that the water may pass freely, its dimensions being of importance in the construction of station meter wheels. Further, in the construction of a meter wheel so that it may work with a minimum of pressure, care should be observed to make the passages communicating between the various chambers of ample capacity at the centre, so that the water may flow freely into and from the chambers during the revolution of the wheel. By inattention to these points, the friction or pressure required to work the meter is

materially increased, and by due regard thereto it may be in like manner diminished.

The above description, which is taken from King's Treatise on Coal Gas, is one of a drum made with four partitions, the manner in which all station meter drums were formerly made.

Later, however, several forms of drums with three partitions instead of four were placed on the market. These are built in such a way as to allow the partitions to pass through the water with less friction than is the case with the partitions of drums of the old style, and therefore the three-partition drums can revolve more rapidly and pass more gas without throwing any more pressure.

Still later a four-partition drum was patented by Mr. C. W. Hinman, which is so designed that the partitions in it come more nearly to being at right angles to the water as they pass through it and therefore develop much less friction in going through the water than do the partitions of any of the other styles of drum. For this reason a Hinman drum of a given size has a much greater measuring capacity than any of the styles of drum previously made, and it is superseding, in the United States at any rate, all of the older forms.

The principle of all of these drums is, however, the same, so that the description which has been given of the action of the ordinary four-partitioned drum applies also to them. (Trustees.)

4. What are the factors in steam boiler construction which influence the efficiency of the boiler?

Ans. The chief factors in steam boiler construction which determine the efficiency, that is the percentage of the total heat furnished by the fuel consumed in the furnace which is used in the formation of steam, are,

1st. The ratio of heating surface to grate surface when the rate of consumption of fuel per square foot of grate surface is an average one; or in any case the ratio between the quantity obtained by dividing heating surface by grate surface and the

rate of consumption of fuel per hour per unit of grate surface, and,

2nd. The activity of the circulation of the water in the boiler over the heating surface.

Up to a certain point any increase in these ratios or in the activity of circulation leads to a greater efficiency, as by such increase is secured that low temperature of the escaping gases which is essential to economy of operation. The efficiency does not seem to be practically affected by variations in the thickness of the plates or tubes forming the heating surface between the limits imposed by structural conditions, though ribbing these tubes or studding the plates with pins projecting into the fire space on one side and the water on the other has a good effect by increasing the heating surface.

From the figures obtained from a large number of boiler tests made by him, Mr. Geo. H. Barrus draws the following conclusions as to the relation necessary between grate surface and heating surface, and in fire tube boilers between grate surface and area of tube opening:

1st. A ratio of heating surface to grate surface of 36 to 1 with anthracite coal and of 45 to 50 to 1 with bituminous coal is sufficient to secure the full efficiency, when the rate of combustion is from 10 to 12 lb. of coal per square foot of grate surface per hour.

2nd. In tubular boilers the area of tube opening should be from 1/9 to 1/10 the grate surface for anthracite, and from 1/6 to 1/7 the grate surface for bituminous coal. (Trustees.)

5. How many square feet of radiating surface should be allowed per 1,000 cubic feet of gas to be handled per twenty-four hours in rating the capacity of atmospheric condensers and of multitubular water condensers?

Ans. In England, where atmospheric condensers are much more commonly employed than is the case in this country, a very generally accepted rule for the amount of surface required in such condensers is thus stated in King's Treatise. "Under ordinary circumstances, where an atmospheric con-

denser is employed, the condensing pipes, measured from the hydraulic main, should have a superficial area of 10 square feet for every 1,000 cubic feet maximum production per diem." Some authorities, however, allow only 5 square feet of area per 1,000 cubic feet per day when the condensing pipes are made of wrought iron. Some calculations made by Mr. W. H. Y. Webber show that under the conditions assumed by him from 3.5 to 4 square feet per 1,000 cubic feet of gas would be sufficient. But in these calculations there is apparently no allowance made for the latent heat of the aqueous vapor condensed out of the gas as the temperature is lowered, and when this allowance is made, the surface required is increased to 5 square feet. As, however, the whole surface must be at its maximum efficiency to obtain this figure, it is safer to take the larger area mentioned above as being the best to adopt in practice.

The area of cooling surface required in multitubular water condensers, where the difference in temperature between the gas and the cooling medium can be regulated at will, depends, naturally, upon what difference is to be maintained. If it is not to exceed 5° F. and the gas is to be cooled gradually from a temperature of 120° F. to one of 60° F., 8 square feet of tube surface will be required for each 1,000 cubic feet of the maximum production per day. But, if it is assumed that it is permissible to allow an extreme difference of 63° F. between the temperature of the gas and that of the water at the gas inlet of the condenser and an average difference of 36.5° F., as has been done in the case of some condensers of this type used by the South Metropolitan Gas Company, of London, England, it is only necessary to have 1.71 square feet of water-cooled surface and 1.19 square feet of air-cooled surface per 1,000 cubic feet of gas per day.

The multitubular condensers made by one of the large manufacturers of gas apparatus in this country are rated at a capacity which allows about 4.2 square feet of tube surface per 1,000 cubic feet of gas per day. If the water is passed through the tubes and the gas outside of them, the shell affords about 1 square foot of air-cooled surface in addition to the water surface. When the gas is passed through the tubes there is no

air-cooled surface except the small amount around the gas spaces at the top and bottom. These condensers will show average differences in temperature between gas and water of over 10° F. and are apt to cool the gas very suddenly at some one point instead of doing it evenly and gradually.

As the weight of authority and experience is still to the effect that sudden and rapid cooling of the gas is detrimental to the securing of good candle power results, it is advisable in designing multitubular condensers to adopt the largest figures for tube surface that are given above and to provide 8 square feet of surface for each 1,000 cubic feet of rated maximum capacity per day of the condensers.

If both atmospheric and water condensers are used, the area of tube surface in the latter can be reduced in proportion to the area of air surface provided in the former. (Trustees.)

6. Explain the method of calculating the theoretical flame temperature of a gas, and as an example calculate that of the illuminating gas with the following composition by volume:

Carbon Dioxide	CO_2	2.3%
Oxygen	O_2	0.5%
Heavy Hydrocarbons		12.9%
Carbon Monoxide	CO	31.1%
Hydrogen	H_2	32.9%
Marsh Gas	CH_4	13.4%
Higher Paraffins	$C^n H_{2^n+2}$	2.3%
Benzene Vapor	C_6H_6	0.7%
Nitrogen	N_2	3.8%

It is assumed that combustion takes place in air and that the heavy hydrocarbons are Olefiant Gas, C_2H_4, and the higher paraffins are Ethane, C_2H_6. (See answers to questions No. 5, Seventh Series; No. 4, Eighth Series, and No. 5, Ninth Series.)

Ans. The theoretical flame temperature of a gas is the maximum temperature that will be developed in the flame produced by burning the gas when no heat is lost in any way, all the heat produced being employed to heat up the products

of combustion. When the combustion takes place in the air, as it is understood to do unless it is specifically stated otherwise, the nitrogen accompanying the oxygen drawn from the air for combustion must be included in the products of combustion. The condition of no loss of heat is, of course, never obtained in practice, but, as it is very hard to measure accurately the losses that occur in practice, the maximum theoretical temperatures are used to furnish a basis for comparisons between different gases, it being assumed that the relations between the temperatures actually obtained will be very nearly the same as those existing between the theoretical temperatures, although the absolute temperatures will be very different in the two cases.

The maximum theoretical temperature evidently depends upon the quantity of heat developed by the combustion of a unit weight of the gas and upon the quantity of heat required to raise, by one degree, the temperature of the products resulting from the combustion of this unit weight, and the quotient obtained by dividing the quantity of heat produced by the quantity required to raise the temperature of the products of combustion one degree will give the highest temperature that can be reached by burning the given gas. The quantity of heat produced is given by the calorific value of the gas. The amount of heat required to raise the temperature of the products of combustion one degree can be calculated by multiplying the weight of each product that is produced by its specific heat, the nitrogen mixed with the oxygen in the air and drawn into the flame with it being included. It is therefore necessary to determine what substances are produced by the combustion of the gas and the weight of each of these substances that is obtained from a unit weight of the gas, to multiply the determined weight of each substance by its specific heat and to add together the numbers obtained by these multiplications, the sum forming the divisor of the fraction.

The maximum temperature that can be produced by burning a gas in air can therefore be determined by adding to the original temperature of air and gas, which may be taken as 60° F. unless a different figure is stated, the quotient obtained by dividing the calorific value of the gas per pound by the

sum of the numbers obtained by multiplying the weight of each of the products of combustion produced from 1 pound of gas by its proper specific heat, the nitrogen mixed in the air with the oxygen required for combustion being considered as one of these products.

The calorific value per cubic foot of the gas specified, with the water formed by its combustion in a state of vapor at a temperature of 212° F., calculated as shown in the answer to question No. 5 of the Seventh Series, is 571.0 B.t.u.

The amount of heat required to raise the temperature of the products of the combustion of the gas 1° F. is found by obtaining the sum of the numbers given by multiplying the weight of each of the different products of combustion by its proper specific heat. The weights of the products of combustion can be obtained from the answer to question No. 4 of the Eighth Series of Questions by multiplying the weights of the products per pound of combustible as given there by the weight of that volume of each substance which is shown by the analysis of the gas to enter into combustion. For the sake of avoiding an excessive number of decimal places in each multiplication, the calculation will be made on the basis of the combustion of 1,000 cubic feet of the gas.

In each 1,000 cubic feet of the gas there will be

24	cubic	feet	of	Carbon Dioxide,
5	"	"	"	Oxygen,
129	"	"	"	Olefiant Gas,
311	"	"	"	Carbon Monoxide,
329	"	"	"	Hydrogen,
134	"	"	"	Marsh Gas,
23	"	"	"	Ethane,
7	"	"	"	Benzene Vapor,
38	"	"	"	Nitrogen.

The weight of each constiteunt per 1,000 cubic feet of the gas will therefore be (see answer to question No. 6, Second Series):

Carbon Dioxide,	$24 \times 0.11634 =$	2.792 lb.
Oxygen,	$5 \times 0.08462 =$	0.423 "
Olefiant Gas,	$129 \times 0.07404 =$	9.551 "

Carbon Monoxide,	$311 \times 0.07404 =$	23.026 "
Hydrogen,	$329 \times 0.00529 =$	1.740 "
Marsh Gas,	$134 \times 0.04231 =$	5.670 "
Ethane,	$23 \times 0.07933 =$	1.825 "
Benzene Vapor,	$7 \times 0.20625 =$	1.444 "
Nitrogen,	$38 \times 0.07404 =$	2.814 "

The weights of the products of combustion of each constituent will be:

Constituents.	Products.		
	CO_2	H_2O	N_2
Carbon Dioxide,	2.792		
Oxygen,			
Olefiant Gas,	$3.14 \times 9.551 = 29.990$	$1.29 \times 9.551 = 12.321$	$11.35 \times 9.551 = 108.404$
Carbon Monoxide,	$1.57 \times 23.026 = 36.150$		$1.89 \times 23.026 = 43.519$
Hydrogen,		$9.00 \times 1.740 = 15.660$	$26\ 48 \times 1.740 = 46.075$
Marsh Gas.	$2.75 \times 5.670 = 15.593$	$2.25 \times 5.670 = 12.758$	$13.24 \times 5.670 = 75.071$
Ethane,	$2.94 \times 1.825 = 5.366$	$1.80 \times 1.825 = 3\ 285$	$12.38 \times 1.825 = 22.594$
Benzene Vapor,	$3.39 \times 1.444 = 4.895$	$0.69 \times 1.444 = 0.996$	$10.19 \times 1.444 = 14\ 714$
Nitrogen,			2.814
	94.786	45.020	313.191

Since the oxygen in the gas originally would aid in the combustion, there would be required so much less from the air, and herefore the weight of nitrogen would be reduced by the nitrogen associated in the air with 0.423 lb. of oxygen, or $0.423 \times 3.31 = 1.40$ lb., and the total products of combustion would be 94.786 lb. of carbon dioxide, 45.020 lb. of water vapor and $313.191 - 1.40 = 311.791$ lb. of nitrogen.

The values at ordinary temperatures of the specific heats at constant pressure of the products of combustion are often used in determining the maximum flame temperatures that can be obtained, and were so used by the Trustees in an answer to a similar question given previously, but this is not strictly correct, because the specific heats of gases increase with the temperature. Therefore the use of the specific heats at ordinary temperatures makes the calculated temperatures too high, and this method was adopted by the Trustees in the answer referred to only because at the time it was written there were no data at hand as to the extent to which the rise in temperature affected the specific heats. This information has been supplied by the lecture mentioned in the Trustees' answer to question No. 5 of the Ninth Series, and the specific

heats to be used in working out the problem can be taken from the table given on page 210 of Vol. II of the Proceedings.

Assuming a flame temperature of 3632° the specific heats as given in the table will be,

Carbon Dioxide	0.368
Water Vapor	0.748
Nitrogen	0.327

and the theoretical rise in temperature produced by the combustion will equal,

$$\frac{571000}{94.786 \times 0.368 + 45.020 \times 0.748 + 311.791 \times 0.327} = \frac{571000}{34.88 + 33.67 + 101.96} = \frac{571000}{170.51} = 3349^{\circ}\ \text{F.}$$

Adding 60° to this flame temperature would be 3409°. The difference between the assumed and the calculated temperature is too great, so it is necessary to make another calculation.

Assuming 3452° as the temperature specific heats are found to be,

Carbon Dioxide	0.360
Water Vapor	0.732
Nitrogen	0.323

and the theoretical rise in temperature produced by the combustion will equal,

$$\frac{571000}{94.786 \times 0.360 + 45.020 \times 0.732 + 311.791 \times 0.320} = \frac{571000}{34.12 + 32.95 + 99.77} = \frac{571000}{166.84} = 3422^{\circ}\ \text{F.}$$

Adding 60° to this the flame temperature would be3482°. This is sufficiently close to that assumed to be taken as the theoretical flame temperature of the gas named in the question.

This temperature can never be attained under actual conditions, since it is impossible to prevent losses of heat that result in keeping the temperature of the flame from reaching the theoretical height. (Trustees.)

7. Why does the ignition of a mixture of gas and air in the proper proportions produce an explosion?

Ans. When a mixture of air and gas in the proper proportions is ignited, the combustion that ensues spreads through the mixture at a very rapid rate. This rapid combustion brings about, by the heat developed, a very rapid rise in temperature and consequently a great expansion of the gases resulting from the combustion, and it is this expansion that produces the effects that are denoted by the term explosion. If the ignition and combustion were to occur where no resistance was offered to the expansion there would be no increase in pressure, but when they occur in a more or less confined space the expansion produces a sudden increase in pressure to which is due the damage done. Even when the ignition of an explosive mixture occurs in the open air the pressure of the atmosphere will, where a large quantity of the mixture is present, offer sufficient resistance to the rapid expansion of the gases to cause an explosion.

A mixture of air and illuminating gas is explosive only when the proportions of air and gas are such that the combustion, when started at any one point, will spread rapidly throughout the whole space filled by the mixture. If either too little or too much gas is present, the flame will not spread because the excess of air or of gas keeps the temperature below the ignition point unless heat is supplied from an outside source. To be explosive the mixture must not contain less than 8 per cent. nor more than 19 per cent. of gas, or, using a different form of expression, it must not contain more than 11½ parts of air to one of gas, nor less than 4 parts of air to one of gas. Mixtures either richer or poorer in gas will not explode, the gas simply burning at any point that is heated to the temperature of ignition without any spread of the flame from this point. (Trustees.)

8. What is the maximum amount of gas containing 1.4% by volume of carbon dioxide, CO_2, and 0.95% by volume of sulphuretted hydrogen, H_2S, that can theoretically be purified by a bushel of unslaked lime containing 88% of calcic oxide,

CaO, assuming that the weight of a bushel is 80 lb. and that both the carbon dioxide and the sulphuretted hydrogen are to be removed by the lime? Give all your calculations.

Ans. As the bushel of lime weighs 80 lb. and contains 88 per cent. of calcic oxide, CaO, it will contain 70.4 lb. of calcic oxide. When the lime is slaked, calcic hydrate, $(CaHO)_2$, is formed by the following reaction: $CaO + H_2O = Ca(HO)_2$. Since the atomic weight of calcium, Ca, is 40, that of oxygen, O, 16, and that of hydrogen, H, 1, the respective weights are $(40 + 16) + (2 + 16) = [40 + (17 \times 2)]$ or $56 + 18 = 74$. That is, 56 lb. of calcic oxide will make 74 lb. of calcic hydrate, and 70.4 lb. of calcic oxide will make $70.4 \times 74/56 = 70.4 \times 1.321 = 93.00$ lb. of calcic hydrate.

When lime is used to remove both carbon dioxide, CO_2, and sulphuretted hydrogen, H_2S, from gas, it will, until nearly saturated, combine with each of these impurities just as if the other were not present, and it does not introduce any great error into the calculation to assume that this continues to be the case until the lime is entirely saturated.

Since the gas contains 1.4 per cent. of carbon dioxide, CO_2, and 0.95 per cent. of sulphuretted hydrogen, H_2S, there are in every 1,000 cubic feet of the gas 14 cubic feet of carbon dioxide and 9.5 cubic feet of sulphuretted hydrogen. A cubic foot of carbon dioxide weighs 0.11634 pound and 14 cubic feet weigh $0.11634 \times 14 = 1.63$ pounds. A cubic foot of sulphuretted hydrogen weighs 0.0899 pound, so 9.5 cubic feet weigh $0.0899 \times 9.5 = 0.85$ pound. The reactions by which the lime removes the carbon dioxide and sulphuretted hydrogen, are, as given in the answer to question No. 6 of the Ninth Series:

(1) $Ca(HO)_2 + CO_2 = CaCO_3 + H_2O$, and

(2) $Ca(HO)_2 + H_2S = CaS + 2H_2O$.

The atomic weights of calcium, oxygen and hydrogen being as given above, and those of carbon and sulphur being 12 and 32 respectively, the proportionate weights are:

(1) $74 + 44 = 100 + 18$, and

(2) $74 + 34 = 72 + 36$,

showing that 74 pounds of calcic hydrate combine with 44 pounds of carbon dioxide, or 34 pounds of sulphuretted hydrogen. Therefore, one pound of carbon dioxide will neutralize $74/44 = 1.681$ pounds of calcic hydrate, and one pound of sulphuretted hydrogen will neutralize $74/34 = 2.176$ pounds of calcic hydrate. The amount of carbon dioxide and sulphuretted hydrogen present in 1,000 cubic feet of the gas in question will therefore neutralize $1.63 \times 1.681 + 0.85 \times 2.176 = 2.74 + 1.85 = 4.59$ pounds of calcic hydrate, and the 93.00 pounds produced as above from the bushel of unslaked lime of the given composition will be theoretically capable of purifying $93.00/4.59 = 20{,}261$ cubic feet of gas containing 1.4 per cent. by volume of carbon dioxide, CO_2, and 0.95 per cent. by volume of sulphuretted hydrogen, H_2S.

Of course this result cannot be obtained in practice, as it is impossible to thoroughly saturate the calcic hydrate with the impurities under working conditions, and therefore the actual manufacturing results will always be less than the results that are theoretically possible. (Trustees.)

9. Assuming that you had satisfied yourself that the distributing system of the gas plant under your charge was in bad condition as to leakage, how would you proceed to locate the leaks and put the system in good condition?

Ans. The leaks in a gas distributing system, unprovided with valves or other means of dividing it into sections, that can be isolated and tested for leakage separately, and that is known to be in bad condition, may be located by a general "barring" over the mains without any preliminary division of the system into sections, or else this division may be made, each of the various sections isolated and tested for leakage and the "barring" confined to the sections that are shown by the test to be those in which the leakage is high. The making of tests of the actual leakage by the determination of the amount of gas lost from an isolated section, all the meters on which have been shut off for the time being, is becoming more and more difficult on account of the increasing use of gas for purposes other than that of giving light, which makes

the shutting off of all the consumers in a district at any time during the twenty-four hours a cause of inconvenience and complaint. In such case, "barring" may be the only generally practicable method, but the testing by meter of at least such parts of the mains as can be isolated from the others conveniently and cheaply will give a good idea of the average condition of the mains and so help a decision as to the general cause of unaccounted-for gas, and also as to the parts of the system which it will be profitable to bar over and repair.

By "barring" is meant the driving of a pointed steel bar down to the main so that any leaks which may exist on the pipe at or near the points where the bar is used can be detected by the small of gas that will be found in the holes left when the bar is withdrawn. To give good results, "barring" must be done systematically by a gang of men specially organized for the purpose. This gang should consist of at least five men, one being a caulker, who also acts as a foreman, and the others laborers, who for part of the time do the actual "barring" and when leaks are discovered do the digging required to enable them to be gotten at and repaired. In the case of a large system it is advisable to use a larger gang, with a caulker in addition to the foreman and laborers to do the digging. the men assigned to the bars being kept steadily at work. In the case of the smaller gang the "barring" will be kept up until a sufficient number of leaks have been located and then it will be discontinued until all have been dug down to and repaired, while with the large gang the "barring" and the digging are carried on simultaneously. Since the majority of the leaks that are not large enough to make themselves apparent without "barring" occur in the joints, and in many soils the gas from a small leak will not travel through the earth to a distance of more than two or three feet, the bar holes should be made directly over the main and as near a joint as possible. For mains 8 in. and over in diameter it is well to make two holes at each joint, one on each side of the main, as close to it as possible, the bars in this case being driven to the depth of the bottom of the main. This is advisable in order to detect leaks in the bottom of the joint, the gas from which will travel along underneath the main instead of working up around the

sides to the top, and which thus would not be detected by a single hole driven down to the top of the main. To secure this result in the absence of detailed street main records showing the locations of the joints, the mains should be uncovered at each street intersection and the joints on the branches located, tested and repaired if found necessary. A line should then be drawn between each two adjacent locations thus found and the bars driven along this line at intervals equal to the distance between the joints. A convenient way of measuring off these intervals is to have a rope about 200 ft. long on which are tied pieces of red tape the proper distance apart. Having located the points, the holes are made by means of a bar of tool steel 1⅛ in. in diameter and 5 ft. 6 in. long and tapered to a point, the taper extending for about a foot from the end. If the ground is soft a bar 1 in. in diameter can be used, while if it is very hard on top a short bar about 2 ft. 6 in. long and from 1¼ in. to 1½ in. in diameter should be used to drive through the crust, the hole then being continued to the proper depth with the longer, lighter bar. With the small gang two bars can be used while "barring," two men being told off to each bar. These men should be provided with either 6 pound or 8 pound hammers, according to the nature of the soil, with which the bar should be driven until it touches the main. When nearing the main the stroke should be made light, so that there will be no danger of cracking it with the point of the bar. If the bar should happen to be driven into the main, it will be necessary to dig down to the main, tap a hole of a convenient size and put in a plug. The depth at which the main is laid having been ascertained before starting to drive the bar, a mark can be made on the bar at the proper distance from the point, so that it will be known when the danger point is reached and the driving governed accordingly. When the bar is driven down as far as necessary it can be removed by striking each side alternately to loosen it and then lifting it, or a wrench may be provided by which the bar can be turned and raised.

After the bar is withdrawn, the foreman should smell at the hole to see if any gas can be noticed. If none is noticed at first the hole should be left open for about ten minutes and

then tried again, when if there is still no smell of gas it can be filled up by pouring dirt into it. If there is a leak at the joint or along the pipe near the hole, it will be apparent by the smell of gas remaining noticeable during the whole time that the hole is opened. In such a case the point should be marked and dug up in due course. When a hole is opened at a joint in the main the previous measurements should be checked up to see that the holes already made come near the joints, and if it is found that these holes are over 2 ft. away from the joints new holes should be made according to the new measurements.

The nature of the repairs will, of course, depend upon the nature of the leak found. If it is in a lead joint the joint should be re-caulked, and if the lead drives back ¾ in. or more a new ring should be put in, or if the gang is equipped with a lead melting pot the joint should be poured full and again caulked. Before pouring in any new lead the face of the lead already in the joint should be roughened up with a chisel, so that the new and the old lead will be well bound together. No lead joint should ever be pointed up with cement. If the leak is in a cement joint, the joint should be dug out to the first ring of yarn and made over again, using Portland cement and untarred yarn. Where the pipe is under block pavements the holes can be made by removing one stone at the proper point, this stone being set back in place after the hole has been tried and it is found that no leak exists. With asphalt pavements the top of the hole can be filled with Portland cement and smoothed off even with the surface of the pavement.

Records should be made and kept of the size of the main, its distance from the curb and its depth at every point where it is exposed, and these records should also give the locations of every bell exposed in the course of repairs, so that in future it will be easy to see that the holes are driven at the right points to strike the joints. When "barring" the services should be barred over as well as the mains.

If it is decided that it is advisable to district the system and isolate and test each district before "barring," this can be done in the following way:

The sections should be so selected as to include the greatest amount of main with the fewest points of supply so as not to have to seal at too many points. The sealing may be done either by means of valves inserted in the mains at the proper points, by means of some of the various isolators on the market, or if the districts are not intended to be permanent simply by the use of bags. In using bags a good plan is to tap a slightly larger hole than is usual and put two bags into the pipe, one on each side of the hole. The space between the bags is then filled with water which is kept level with the top of a nipple 3 in. long screwed in the hole. If the water runs out of this space very quickly the bags should be removed, the main wiped out with a bunch of waste on a stick and the bags put in again. If they still fail to make a tight joint with the pipe, instead of filling the space between them with plain water a solution of oatmeal in water, which being thick will not flow through small openings so readily, may be used, or heavy lubricating oil may be poured in ahead of the water to answer the same purpose as the oatmeal. The section being sealed off, all the meters in that district should be shut off, using the meter cocks instead of the street service cocks, if these are provided. A test meter should be connected up on a by-pass at the point where the largest supply main for the district is sealed and the amount of gas passing through the meter during fifteen minutes or half an hour noted, the readings of the meter being taken every five minutes to see whether the loss is uniform. Any great variation in the amount passing in different five minutes would indicate that gas is being consumed at some point in the district owing to some of the meters having been overlooked. If the loss is at a uniform rate during the test a calculation should be made from the results obtained as to the loss per mile of main per year. If this is not more than 50,000 cubic feet per mile of 3 in. main per year the section can be passed for the time being, especially if the mains in it are laid under pavements. If the loss is greater than this, "barring" should be resorted to until the leaks are found and repaired and the section on the second test shows a leakage at a rate of less than 50,000 cubic feet per mile per year. (Trustees.)

10. Give a description, illustrated by sketches, of the manner in which you would connect a consumer's meter of the ordinary size (three to ten lights) to the end of the service and to the house riser, and also of the manner in which you would support the meter.

Ans. Although some gas companies are adopting all iron connections even for three, five and ten light meters, the use of lead connections for meters of these sizes is still so general that this answer will be confined to the consideration of such connections.

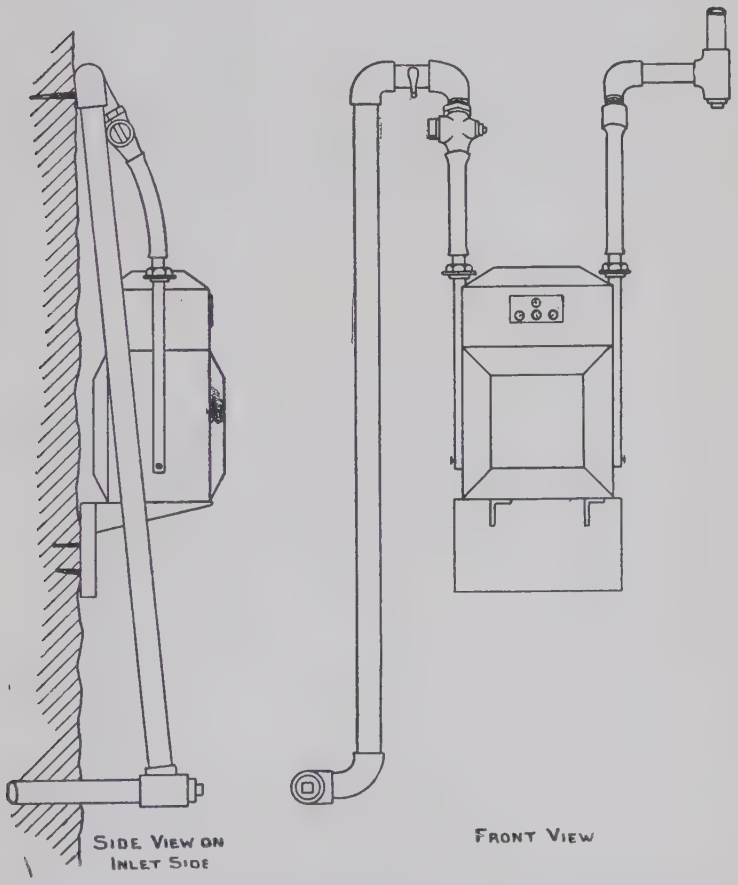

METHOD OF CONNECTING AND SUPPORTING CONSUMERS' METERS.

The end of the service coming through the cellar wall is finished with a tee set with its side outlet horizontal. Into this outlet is screwed a service elbow and into the elbow a straight piece of pipe of such length as to bring its upper end the proper distance above the meter inlet when the meter is set at the desired height. On this upper end is put an ordinary elbow in which is inserted a piece of pipe running horizontally and parallel with the cellar wall, and of sufficient length to bring the outlet of a second service elbow screwed on its end in line with the meter inlet. The whole combination is then pushed back, turning around the service elbow in the tee at the end of the service as a centre, until the horizontal portion is tight against the cellar wall, to which it is fastened with a pipe hook or hooks, so that it is rigidly held and not liable to be damaged by irresponsible persons even when the meter is disconnected. The meter cock is screwed on the service elbow at the end of the horizontal run, and the connection between it and the meter inlet made by the lead inlet connection, which may either be attached directly to the cock, as in the sketch, or be separate from it, according to the kind of meter cock used.

It is necessary to use one more fitting when the connection is made in this way instead of being made, as is usually done, with the outlet of the tee at the end of the service looking vertically upwards and with the pipe running out of this outlet entirely free from the wall, but the security against possible accident when the meter is disconnected, obtained by having the pipe fastened to the wall, is certainly worth the small extra cost.

On the outlet side of the meter the end of the house riser should also be finished off with a tee, out of the side outlet of which a piece of pipe is run to a point on the cellar wall above and behind the meter outlet. On the end of this pipe is screwed a reducing service elbow, to which the lead outlet connection is screwed; or, if the distance between this point and the meter outlet is too great, a reducing elbow is used into which is put a nipple of the proper length, the coupling on the lead outlet connection being screwed on this nipple. On both the inlet and outlet sides of the meter the pipe should be kept the full

size of the service and riser respectively until it is necessary to reduce for the meter cock or the outlet connection, as the case may be.

The meter should always be supported on a shelf of some kind so that none of its weight is carried by the connections. The shelf may be made in various ways. A good and simple form is made of three pieces of board, two of which are rectangular and equal in size, while the third is a right angled triangle with its two sides of the same length. These pieces are nailed together to form the shelf in the manner shown on the sketch. A form of shelf that leaves the bottom of the meter open for inspection is on the market. It consists of a piece of 1 in. board 11½ in. long by 6½ in. wide. At about 3 in. from each end a groove is cut to a depth of about one-half the

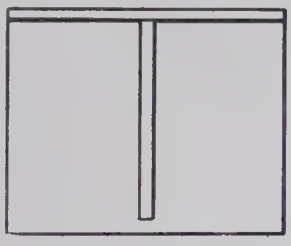

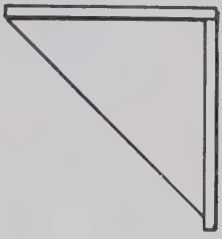

thickness of the board and running down 2 in. into the board from the top edge. Into these grooves are driven L shaped iron brackets 2 in. deep at the back tapering to ¼ in. at the front and 6½ in., 8½ in. and 11½ in. long for three, five and ten light meters respectively. The flat sides of the brackets are uppermost and the meter rests on these, the board being fastened to the wall. This form of shelf is illustrated on the cut showing the meter connections.

When the cellar walls are such that nails cannot be driven into them, or when driven do not obtain a firm hold, holes should be drilled into them with a chisel at the proper points and filled with wooden plugs into which the nails can be driven so as to hold the shelf securely. The same thing can be done for the pipe hooks if they do not get a good hold in the wall. (Trustees.)

11. Give a description, illustrated with outline sketches, of the connection of a circulating water heater to a vertical hot water boiler. Assume that the boiler is already connected to a coal range.

Ans. In connecting a circulating water heater to a vertical

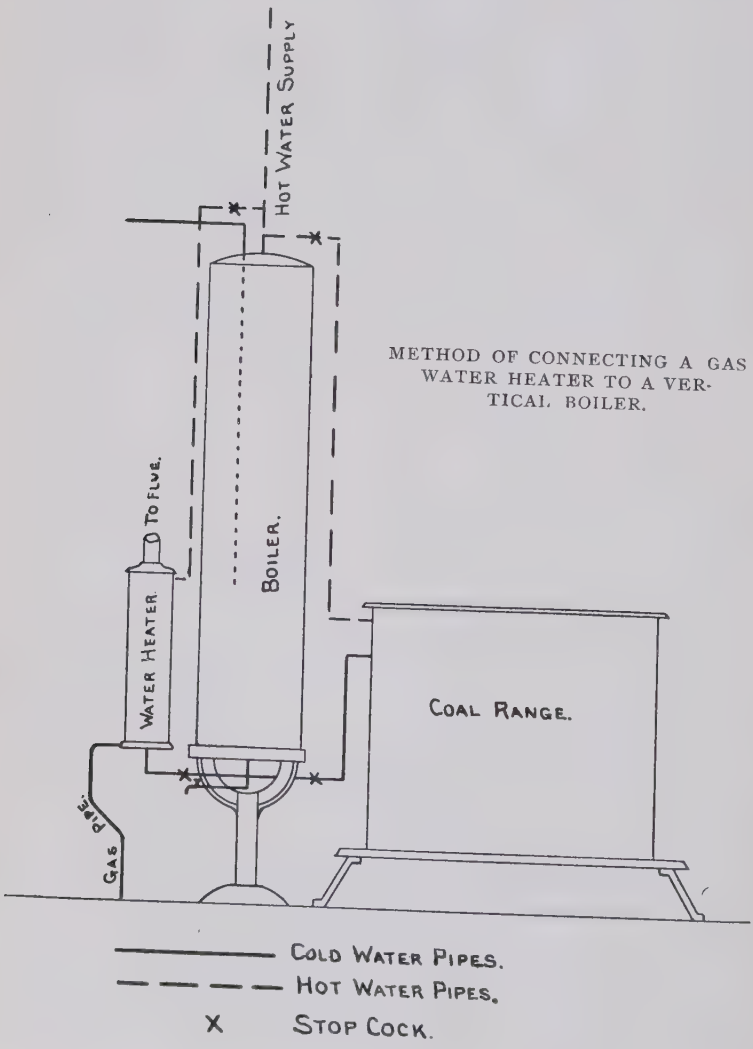

METHOD OF CONNECTING A GAS WATER HEATER TO A VERTICAL BOILER.

hot water boiler of the ordinary kitchen style, the bottom of the heater should be put about on a level with the bottom of the boiler in order to secure the best circulation. The cold water connection for the heater should be taken from the cold water pipe running from the bottom of the boiler to the water back of the coal range and the hot water pipe from the heater brought up and connected into the hot water supply pipe running out of the top of the boiler. This method of connecting, which should be followed even in the case of the water back of the coal range, compels all the cold water in the boiler to pass through the heater before any heated water can pass through a second time and enables the hot water to be drawn within a few minutes after lighting the gas in the heater instead of having to wait until all the water in the upper part of the boiler has been heated, as is necessary when the hot water pipe opens into the boiler at a point in the side about one-third of the height above the bottom, and will permit the securing of great economy in the use of gas, especially when small amounts of very hot water are required several times a day.

Stop cocks may be arranged, as shown, so that either the gas heater or the water back of the coal range can be shut off without interfering with the use of the other, but they are liable to cause serious trouble if they are closed accidentally and the heater is started while they are closed, and for this reason it is better to have the connections made without any stop cocks.

In the cut the gas water heater has, for the sake of clearness, been shown as placed on the opposite side of the boiler from the coal range, but the connections can be made equally well with the heater in any other position, and to save space it is often desirable to place it in front of the boiler on the side towards the coal range. When this is done it may not be possible to make the connections exactly as shown on the cut, but the same general arrangement should be adhered to. All the pipe and fittings used for water connections should be made of galvanized iron and should be large enough to permit a free flow of the water so that the circulation through the heater will not be checked. (Trustees.)

THIRD SERIES OF QUESTIONS—SECTION OF 1911—PRACTICAL CLASS—TRUSTEES GAS EDUCATIONAL FUND.

1. What is thought to be the cause of spontaneous combustion in bituminous coal? Is this combustion more apt to occur in dry coal or in wet coal, in small coal or in large coal?

2. Give a description, illustrated with sketches, of a bench of retorts equipped with a direct fire furnace and describe the operation of the furnace, paying especial attention to the manner in which the fires should be handled in order to secure the most economical results.

3. Give a description, illustrated by a sketch showing a vertical section of the apparatus, of the construction of a double superheater Lowe carburetted water gas apparatus, and give also a brief description of its operation for the manufacture of carburetted water gas.

4. Describe some form of apparatus for removing tar from hot gas.

5. Using the weights per cubic foot of the various gases given in the answer to question No. 7, Second Series, and the definition of specific gravity given in the answer to question No. 6, Second Series, calculate (1) the weight of 1,000 cubic feet of coal gas with a specific gravity of 0.435; (2) the weight of 1,000 cubic feet of water gas with a specific gravity of 0.625; (3) the specific gravity of hydrogen, H_2, and (4) the specific gravity of ethane, C_2H_6. Give your calculations in each case.

6. In a gas pipe, one end of which is higher than the other, such as the riser pipe in a house or a street main running up hill, and in which there is no flow of gas for the time being, the pressure as shown by a syphon pressure gauge will not be the same at the top and at the bottom. At which point will it be the greater? Does the specific gravity of the gas have any influence upon the amount of this difference between the pressures at the two points? Give the reasons for your answers.

7. What are the chief commercial products obtained by

the gas manufacturer from the distillation, in retorts, of 2,000 pounds of average Pittsburg or Youghiogheny coal? What amount of each is produced and what effect has the temperature of the retorts upon these amounts?

8. What substances are employed to free gas from ammonia, NH_3, and sulphuretted hydrogen, H_2S, respectively, and from carbon dioxide, CO_2, and bisulphide of carbon, CS_2, in case it is desired to remove the last two impurities?

9. Why is it important to regulate the pressure on street mains?

10. When globes are used in connection with flat flame gas burners, what effect does the size of the bottom opening of the globe have upon the light given out by the burner? How do the various materials of which such globes are usually made act in absorbing the light produced by the burner?

11. What are the different forms of atmospheric burners usually employed for the top burners of gas cooking stoves, and which form do you consider the best for this purpose? Give the reason for your choice.

12. What are the characteristics of a good building sand?

Answers to the Third Series of Questions—Section of 1911—Practical Class—Trustees Gas Educational Fund.

An answer to question No. 1 is included among the answers to the Fourth Series of questions for the Section of 1910, and can be found on page 881 of this volume. An answer to a problem similar to the one in question No. 5 has been given on page 340 of Vol. I of the Proceedings. An answer to a question, the same as No. 7, except that it specifies a long or gross ton, has already been given on page 343 of Vol. I. Answers to questions Nos. 3, 6, 8, 10, 11 and 12 have

also been published in a previous volume and will be found as follows:

No. 3, Vol. I, page 334.
No. 6, Vol. I, page 341.
No. 8, Vol. I, page 344.
No. 10, Vol. I, page 346.
No. 11, Vol. I, page 348.
No. 12, Vol. I, page 350.

The answers to the other questions are as follows:

2. Give a description, illustrated with sketches, of a bench of retorts equipped with a direct fire furnace and describe the operation of the furnace, paying especial attention to the manner in which the fire should be handled in order to secure the most economical results.

Ans. A bench set with six retorts heated by a direct fire furnace, is illustrated on the accompanying cuts, which show a vertical cross section, a vertical longitudinal section and a horizontal section through the flues carrying the waste gases from the setting to the chimney flues.

The setting, that is, the combination of retorts, furnace and flues, is built inside a space formed by two side walls, a back wall, in which are the chimney flues, and an arch springing from the side walls and covered with brick work to a depth of about two feet. Such a space is called an "arch." The brick work of the setting and that of the arch are entirely independent of each other, and the setting can be torn out and replaced at any time without affecting the arch.

As will be seen from the cross section, the retorts, which are D shaped clay retorts, 14 in. × 24 in. × 9 ft. 0 in. long inside, are set in two almost vertical rows of three each, placed symmetrically with respect to the middle line of the setting. The upper retorts are drawn closer to the middle line, for the double purpose of exposing them more directly to the radiant heat from the fire and of keeping their mouthpieces somewhat out of the way of the standpipes from the lower retorts.

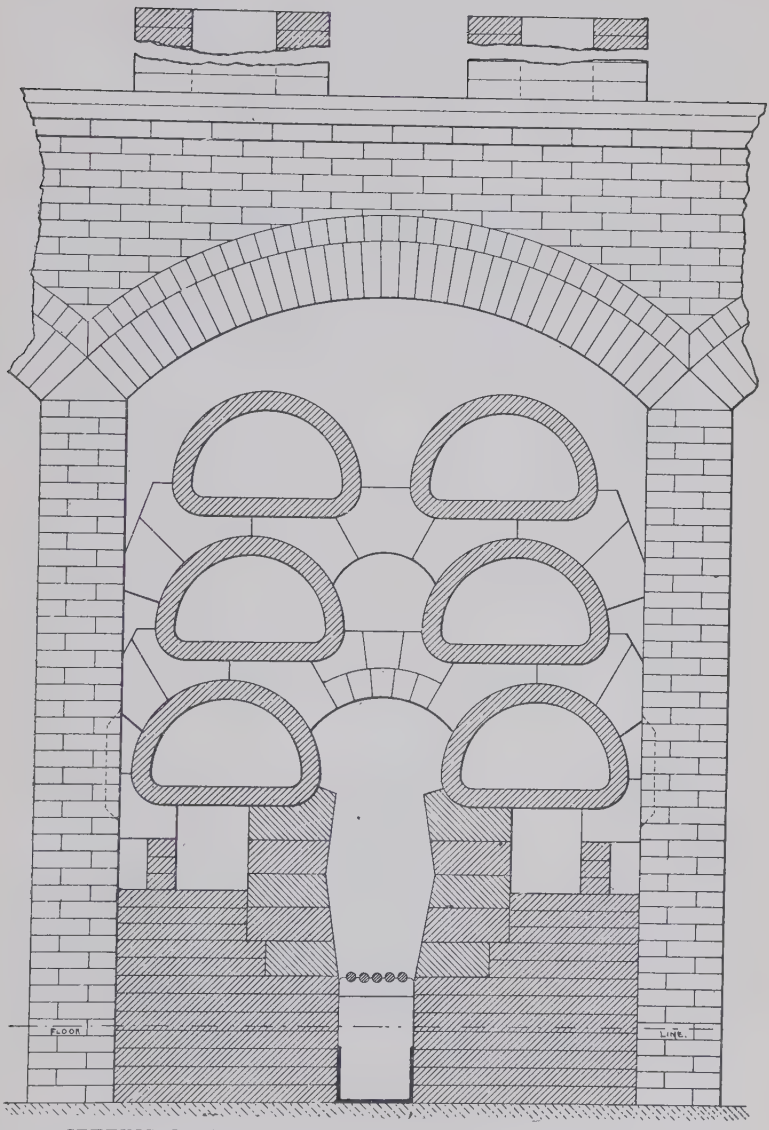

SETTING OF SIX RETORTS WITH DIRECT FIRE FURNACE.
CROSS SECTION.

Each bottom retort is supported on the inside, or side next the furnace, by blocks making a solid wall from the front to the back of the setting and constituting the top course of the furnace wall on that side, and on the outside by five blocks,

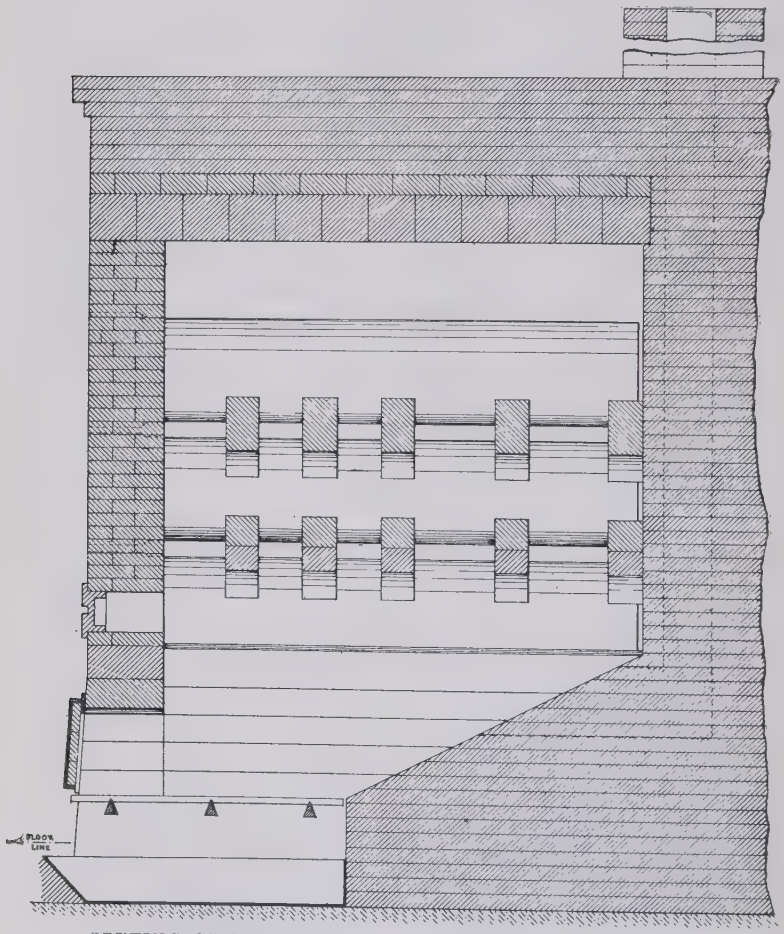

SETTING OF SIX RETORTS WITH DIRECT FIRE FURNACE.
LONGITUDINAL SECTION.

each about 6 in. wide, one of which is placed at the back end of the retort while the others are spaced between this and the front wall, as shown on the horizontal section. All of these blocks are shaped to fit the retort.

The middle retorts are supported by five sets of blocks, of the same width as the blocks described above, spaced in the same way from the front to the back of the setting and resting on top of the bottom retorts, and the top retorts by similar sets of blocks resting on top of the middle retorts.

The furnace is built midway between the walls of the arch

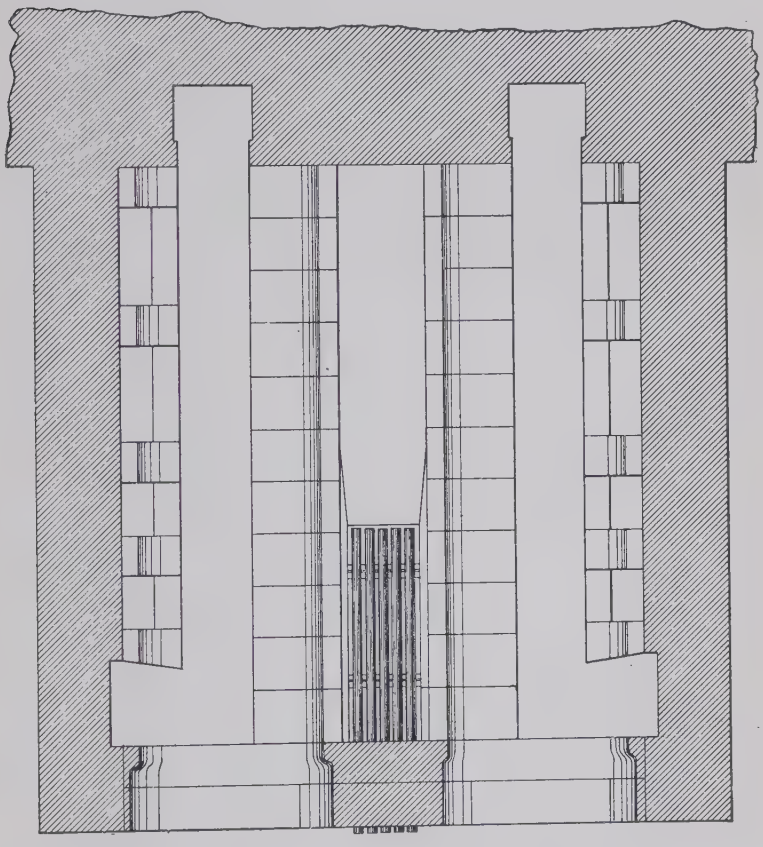

SETTING OF SIX RETORTS WITH DIRECT FIRE FURNACE.
HORIZONTAL SECTION SHOWING BED FOR BOTTOM RETORTS AND THE WASTE GAS FLUES.

and with its walls parallel to these walls. At the grate bars it is 12 in. wide by 3 ft. 0 in. long and the width is increased to 18 in. at a point 17 in. above the bars and is then reduced

to 14 in. at a height of 2 ft. 6 in. above the bars, which is that of the top of the walls between the bottom retorts. At the back it slopes from a length of 3 ft. 0 in. at the grate bars to one of the full depth of the setting at the top of the walls. Under the grate bars is an ash pan kept partly filled with water for the purpose of furnishing, by its evaporation under the influence of the heat radiated to it from the fire, sufficient steam to prevent the clinker from becoming too hard.

The hot products of combustion rise from the furnace between the bottom retorts, after which part passes over between the top of the lower and the bottom of the middle retort on each side, while the remainder continues its upward course. Another part is taken off between the middle and the upper retorts and what is left is deflected over the tops of the upper retorts. All are finally drawn into the small side flues, which are situated, one on each side, next to the main flue under each bottom retort. By these side flues all of the hot gases, except a small part that is allowed to pass directly into the main flues by openings left underneath the retorts in the wall between the two flues, are brought to the front of the setting and then led back through the main flues to the chimney flues in the back wall. These chimney flues are continued up to a height of four or five feet above the top of the stack. The proportion between the amount of hot gases passing directly into the main flues and that brought forward to the front, can be regulated so as to have the retorts uniformly heated from front to back, by adjusting the size of the openings between the side flues and the main flues by the insertion, into these openings as originally left, of bricks introduced through the main flues. This is done after the bench is heated up.

After the retorts are all set the "arch" is closed in by a front wall of fire brick thirteen inches thick, built around the retorts with its face flush with their fronts. Sight holes, closed with removable plugs, are left in this wall at the proper points.

In a direct fire furnace the carbon of the fuel is burned to carbon dioxide, CO_2, in one operation, which is practically completed in the fuel bed, and the retorts are heated principally by the sensible heat possessed by the products of combustion

passing off from the fuel bed. It is therefore necessary to so handle the furnace as to produce the highest possible temperature in the fire itself. In fact, the fire should be handled very much the same as a boiler fire. The bed of fuel should not be made too deep, a depth of from fifteen inches to eighteen inches giving the best results. Fresh fuel should be added at frequent intervals, about once every hour, in order to maintain this depth constant and keep the fire from burning down too low. The grate bars should be shaken lightly from time to time so as to keep the bottom of the fire bright. The condition of this part of the fire can be determined by observing the reflection shown on the water in the ash pan. About twelve hours after the fire has been clinkered a slice bar should be run along the grate bars and the clinker that has formed there should be thoroughly broken up. Clinkering must be thoroughly done every twenty-four hours. It is impossible to use secondary grate bars when cleaning a furnace of this kind, and so after pushing as much of the fuel as possible up on the slope of the back wall the rest is dropped into the ash pan by drawing away the grate bars, the clinker is cut away from the side and back walls and removed from the furnace, the grate bars replaced, the fuel on the back wall drawn down and spread over the bars and fresh fuel charged into the furnace. The wear and tear on the furnace walls can be reduced by leaving an inch or so of clinker on them at all times, never attempting to take it off down to the brick.

To secure economy of fuel it is necessary to prevent any air from being drawn into the setting through cracks in the brick work and openings around the frame of the charging door, and to be careful not to have an excessive draft. A direct fire furnace requires more draft to maintain the heat in the bench than does a generator furnace, but an excessive draft is bad in both cases. The appearance of flame at the top of the chimney flues indicates the existence of too much draft, and when it is noticed the dampers should be pushed in. All flues should be carefully cleaned out at least once a month in order to prevent any stoppages in them that would interfere with the keeping up of the heat, such stoppages being very

frequently the cause of low heats when everything is apparently in good order. (Trustees.)

4. Describe some form of apparatus for removing tar from hot gas.

Ans. One method of removing tar from hot gas is founded upon the principle that deposition of the vesicles of tar held in suspension in the gas may be effected by bringing these vesicles into contact with solid surfaces, or with each other. Messrs. Pelouze and Audouin have invented a condenser, or tar extractor, designed for use with hot gas, and founded upon this principle.

"The action of the apparatus is as follows: The gas to be purified is made to flow through a series of holes of small diameter, so forming jets, which strike against a surface situated directly opposite. In the passage of the gas through the holes, the liquid molecules are brought into close contact with each other, and the operation is completed by the contact with the solid surface upon which the tarry matter is deposited.

"The apparatus is represented in the cut, part shown as broken away in order to explain more clearly its action. AAA is the outer case, to which are attached the inlet and outlet pipes, I and O. Concentric with the case is fixed an annular tank BB, in the middle of which is left a free passage for the gas. This annular tank is charged by preference with dead oil obtained from tar, and in it is suspended the bell or holder C, counterbalanced as represented.

"The sides of the bell C for a portion of its height are formed of three or more concentric cylinders which are separated by a space of about three-eighths of an inch between them. Each cylinder is pierced, as represented at D, with a number of rows of holes each about one-twentieth of an inch in diameter, which are so placed that the gas in passing through the orifices of one of the cylinders impinges against the plate of the next; by this means all the tarry vesicles are broken up in a manner so complete, that when the apparatus is dispensed

with, a piece of writing paper being exposed to the influence of the gas issuing from a small jet is, in the course of two or three seconds, rendered almost black by the deposit of the tar; whereas, when the condenser is in operation under like

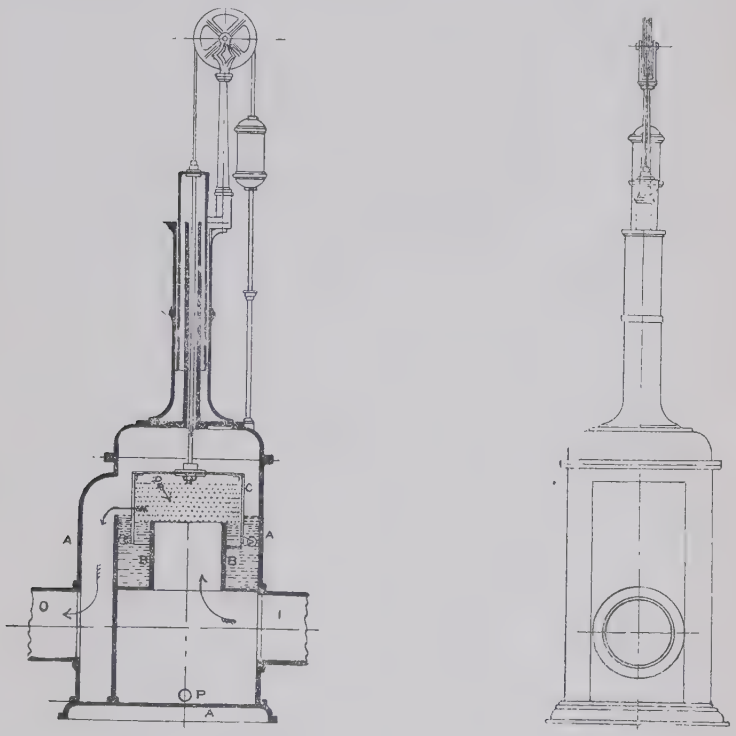

P AND A CONDENSER. 800,000 CAPACITY.

conditions the paper is not soiled in the slightest degree. The tar is deposited on the side of the bell, whence it passes off by a suitable opening to the pipe P.

"A pressure gauge is placed for the purpose of appreciating when the holes in the bell become fouled, in which case means are provided for cleaning. The upper part of the vessel is a regulator to adjust the apparatus according to the various quantities of gas produced."

The P. and A. condenser is a very efficient and compact form of apparatus for the removal of the heavy tar from gas.

A form of apparatus known either as a hot scrubber or a dry scrubber is also used for this purpose. It consists usually of a rectangular shell, enclosing a space which is divided into several compartments, the gas passing through these compartments in succession. In each compartment is a series of plates so arranged that the gas is frequently baffled and forced to change the direction of its travel, and is at the same time exposed to friction in passing over the surface of the plates. The shock of the impingement on the baffle plates, added to the friction between the gas and the plates, causes the deposition of the tar just as in the P. and A. condenser. As, however, the gas is not divided into small streams, as in the latter form of apparatus, the dry scrubber must be made much larger if it is to handle the same quantity of gas per day.

An ordinary tower scrubber filled with boards is used in carburetted water gas apparatus as a tar extractor, the boards being sometimes left dry, but usually wetted by a spray of water. In general any form of washer may be used for the removal of heavy tar from the gas provided hot ammoniacal liquor is employed as the liquid through which the gas is bubbled. (Trustees.)

9. Why is it important to regulate the pressure on street mains?

Ans. It is very desirable that the gas should reach the consumer at a uniform pressure, or a pressure as nearly uniform as it is possible to have it under working conditions, since unless this is the case he cannot get good results from his gas consuming appliances. If the loss of pressure in the street mains between the works and the consumers was always the same, the maintenance of a uniform pressure at the works would give a uniform pressure to the consumers, and there would be no necessity for regulating the pressure on the street mains except to reduce an excessive holder pressure. But the loss of pressure in the street mains varies with the rate at which gas is passing through them, being greater at the times of

heavy consumption and smaller at times of light consumption. Consequently, if a uniform pressure were maintained at the works, the pressure at which the consumers received the gas would vary between more or less widely separated limits, while, by a proper regulation of the pressure at the works, the gas can be delivered to the majority of the consumers at a pressure that will be fairly uniform throughout the twenty-four hours of each day and from day to day. Besides giving a better service to the consumer the proper regulation of the pressure on the street mains reduce leakage by keeping the mains from being subjected to an excessive pressure during the time of light consumption, as would be the case if a uniform pressure, sufficient to meet the requirement of the time of heavy consumption, were maintained. (Trustees.)

REVISION OF QUESTION BOX.

THE MANUFACTURE OF GAS.

1. Gas Coals.
   - Kinds.
   - Sources.
   - Examination.
   - Storage.
   - Handling.
2. Carbonizing (or Retort House Practice,) Benches, carbonization, charging and drawing, operation of retort house, as a whole.
3. Condensation and Scrubbing. Theory, construction and operation.
4. Purification. Chemistry and operation.

1. GAS COALS.

Kinds.

Coals are generally classified as bituminous, semi-bituminous and anthracite. The coals employed for the manufacture of coal gas are coking bituminous coals—generally called "gas coals," and are those that show by analyses a high percentage of volatile matter, consisting of highly combustible gas, a comparatively low percentage of fixed carbon and organic matter, and a comparatively low percentage of sulphur and ash. Such a coal produces a good yield of gas and also a considerable quantity of valuable by-products.

Cannel coals are also employed in the manufacture of gas, but more generally in Great Britain than in the United States. Such a coal is used generally for purposes of enrichment and produces a large quantity of gas of high candle power, with a corresponding decrease in quantity of residuals produced. The coke from Cannel coal is of very inferior quality, being porous and containing a very large percentage of ash. Peat

and lignite are sometimes used for the production of gas, but owing to the high amount of impurities in the gas and the poor yield obtained from these coals, their use is generally uneconomical, where good gas coals are obtainable.

Coals are shipped as "Run of mine," ¾ inch, ½ inch and "Slack." The latter is the screening.

"Run of mine" coal is the coal as it comes from the mine without any preparation. The size of the mesh over which the coal has passed during screening determines the classification of size.

Sources.

The principal gas coals of the United States are located in the Appalachian coal fields, which stretch along the Appalachian mountain range from New York to Alabama, but gas coals are also found in each of the other great coal fields, viz.: the Middle in Illinois, Indiana and western Kentucky, the Western in Missouri, Iowa, Nebraska, Kansas, Arkansas and the Indian Territory, and the field in the Far West, the limits of which have not yet been clearly defined, nor its resources fully developed.

Among the gas coal districts of the Appalachian field, the Pittsburg district, which lies immediately east and south of Pittsburg, on the Allegheny, Monongahela and Youghioghenny Rivers, is prominent. The coal from this district is comparatively hard and dense, so that it can be transported without excessive breakage, and yields a large amount of gas of good quality and a clean hard coke. The percentage of sulphur contained in it is small, being usually well under 1 per cent. A fair gas coal is also found in Jefferson and Beaver Counties, Pennsylvania, but this coal is not quite as good as that from the main body of the Pittsburg field.

Another important field is the West Virginia field, located in the northern part of West Virginia, along the banks of the Monongahela River. The coal in this field is very similar to that obtained from the Pittsburg district, but is less able to stand handling without disintegrating and is apt to contain more sulphur.

The Kanawha district, also in West Virginia, extends back for about 30 miles on each side of that portion of the Kanawha

River, between Kanawha Falls and Charleston. The coal produced here differs only slightly from the coals mentioned above, except in being apt to contain more sulphur than is found even in the coal mined in the West Virginia district, the percentage running up as high as 1½ per cent. in some samples, although as low as 0.6 per cent. in others. Cannel coal is also found in paying quantities in this district.

Kentucky possesses a little gas coal, but hardly enough to be taken into consideration, if it were not for its large deposits of rich cannel coals. The best known of these is the Breckenridge, which, besides giving off a large amount of rich volatile matter, yields also a fairly good coke. This coal can be mixed to a proportion of 10 per cent. with ordinary gas coal without depreciating the coke from the latter.

In Tennessee good gas coal is found in Scott and Anderson Counties, while in Campbell County an excellent cannel coal is mined, which is similar to the Breckenridge and is known as Jellico cannel. The gas coal is a clean hard coal fully equal in all respects to that obtained from the Pittsburg district.

In Alabama there are three coal fields, the Cahaba, the Coosa and the Warrior, in each of which some coal is found which can be used as gas coal, but the best coal for this purpose comes from the Corona seam in Walker County. This coal is clean and hard enough to bear handling well.

Although Ohio, Indiana and Illinois produce coal that is used locally for gas making, they cannot be considered as gas coal districts, since the coal is only used for this purpose when the gas works are practically over the mines. Pennsylvania coal is in demand throughout these States for use in preference to the local coal.

In Kansas the Cherokee field produces gas coal that is good in every respect, except as to the amount of sulphur contained in it, which runs from 2½ per cent. to 5 per cent, and even as high as 8 per cent. in some samples.

The Choctaw country in Indian Territory yields a coal which is clean and hard, stands handling and produces a good coke. It closely resembles the Pennsylvania coals, although it contains more sulphur and ash than the latter, the percentage of sulphur being a little over 1 per cent.

The Trinidad field in Colorado also furnishes a clean bright coal that is low in sulphur and is said to give a good yield of good quality gas, and from 60 per cent. to 70 per cent. of compact coke.

On the Pacific coast the South Prairie, Burnett and Roslyn mines give a coal from which a fair amount of fairly good quality gas can be obtained. It is low in sulphur but high in ash, and produces a soft, friable and comparatively poor coke.

The principal gas coal fields in Canada lie on Glace Bay and Cow Bay, in Cape Breton. These provincial coals were formerly used quite extensively by gas works situated on the Atlantic coast of the United States. They yield a good amount of gas of a quality better than the average, but they disintegrate easily, contain a fairly large amount of sulphur and are very susceptible to spontaneous combustion. At the present time their use has been practically abandoned in the gas works of the United States, although they have been extensively used in coke oven practice.

Average analyses of some of the coals mentioned above are here given:

	Volatile Matter Per Cent.	Fixed Carbon Per Cent.	Ash Per Cent.	Sulphur Per Cent.
PENNSYLVANIA:				
Pittsburg	35 to 40	54 to 58	3 to 5	0.6
2nd Pool	34 to-37	55 to 57	6to 8	0.8 to 1.0
Westmoreland	37	56	3 to 5	0.8 to 1.0
Connellsville	32	60	7	0.6
WEST VIRGINIA:				
Kanawha	34 to 40	55 to 62	2 to 4	0.6 to 1.5
George's Creek	35 to 38	50 to 55	6 to 12	0.8 to 1.7
KENTUCKY:				
Breckenridge Cannel	47	42	10	0.6
TENNESSEE:				
Gas Coal	36 to 39	56 to 60	1.8 to 3	0.8
Jellico Cannel	50	35	14	0.7
ALABAMA:				
Corona Steam	34 to 41	50 to 59	7 to 9	0.7
KANSAS:				
Cherokee Lump	34 to 37	50 to 54	6 to 10	2.5 to 7

	Volatile Matter Per Cent.	Fixed Carbon Per Cent.	Ash Per Cent.	Sulphur Per Cent.
INDIAN TERRITORY:				
McAlister	33 to 38	50 to 56	5 to 12	0.5 to 1.7
WASHINGTON:				
Roslyn	28	61	9	0.1
COLORADO:				
Trinidad	33 to 37	51 to 57	9	0.7 to 1.4
ILLINOIS:				
Cartusville	33	50	11	0.7
NOVA SCOTIA:				
Cape Breton	35	53	5.5	3.0

The so-called Pittsburg gas coal is what is generally known by gas companies as the Youghioghenny or Westmoreland coal. This coal is mined as described above, along the Monongahela and Youghioghenny Rivers for a distance of about 30 miles.

It comes from what is known as the thin vein, First and Second Pool District, beyond that comes the Third vein and other thick vein steam coal districts. By thin vein coal is meant coal from a vein that runs from 5 ft. to 5½ ft. in thickness, which coal is found to be low in sulphur and high in volatile matter, while the thick vein coal, taken from veins running from 7 ft. to 10 ft. in thickness, is found to be high in carbon and sulphur and low in volatile matter.

In explanation of the terms First Pool and Second Pool, it may be stated that when the mines in that district were first opened, the only way of getting the coal was by water, and in order to get sufficient depth of water, it was necessary to build dams or locks. (The first lock was built at Beck's Run, the second at McKeesport and the third at Walton, on the Monongahela and Youghioghenny Rivers.) All coal mined between the second and third locks is called Second Pool, and so on up the rivers.

The thin vein coal (most suitable for gas purposes) comes from the First and Second Pools, and possibly the extreme northern part of the Third Pool. All the balance is what is known as thick vein coal and is mostly used for steam purposes. While there are about 1,000 mines in the State of Pennsylvania that produce Youghioghenny coal (or so-called Pittsburg gas coal), only 38 out of this number produce thin

vein First, Second and Third Pool coal, the balance all produce thick vein steam coal.

No general rules have been worked out for the identification of samples by analytical means, and it is only where the characteristics are decided that a sample may be definitely asserted to have come from one well known field, or not to have come from some other one equally well known.

Coal supply companies controlling scattered properties often submit analyses and samples of coal they propose furnishing and then supply from other sources, presuming they are similar. This often causes endless trouble to the gas companies who are trying to get results anticipated from the submitted analyses, or from previous experience with the proposed coal. This fact is brought out to show that all coals from the same district, and even from the same field, do not run alike.

The lack of uniformity in methods of determining the volatile matter, and particularly the uncertainty that has existed in the sulphur determinations, has also been responsible for many discrepancies in shipments of coal.

Add to this condition the errors introduced by improper sampling, the natural variations of the coal at different stages of the working of a mine, or the changing from one mine to another in the same field, and finally the fundamental fact of the relatively rare occurrence of first class gas coal among the abundant sources of mere steam coal, it is not surprising that few gas works are supplied uniformly with first class gas coal that can be depended upon for a high yield and satisfactory candle power at a minimum of retort house and purifier expense.

The Board has made an attempt to collect reliable information on which a general discussion of the distribution and characteristics of the American gas coals could be based, having in view a plan to point out not only the localities of the different grades of coal suitable for gas making, together with their distinctive values and disadvantages, but also a general scheme of identification by laboratory analyses.

It became evident at the outset of the correspondence that the available data was too meagre, and that the matter could only be done justice to by a special investigation; the problem is

therefore referred to the Research Department with the recommendation that an earnest effort be made to induce some members, or group of members, to take up the investigation actively and by co-operation with the Geological Department of the Federal Government, the coal producing States, gas engineers, and such coal mining companies as are interested in gas coal, map and classify the American coal fields. Then through a systematic analytical examination of samples of known reliability, they should Bertillon the principal gas coals beyond a possibility of confusion.

Examination:

An examination of coal may include analyses and experimental testing. The analysis will give a fairly good idea of the probable yield of gas and coke. The quality and quantity of other by-products produced depends greatly upon the conditions and methods of carbonization and treatment of the gas after it leaves the retort.

Actual working results, however, are necessary to determine the real value of the coal.

The most valuable coals for use in the manufacture of coal gas are those which contain a small percentage of ash and sulphur, a high percentage of volatile matter of good illuminating value, and which possess coking qualities that permit of the production of good salable coke, amounting to from 55 per cent. to 65 per cent. of the original weight of coal.

A good Pittsburg coal, which may be taken as the standard gas coal of the United States, will show the following analysis by weight:

Volatile Matter	33% to 35%
Fixed Carbon	60% to 55%
Ash	6% to 4%
Sulphur	0.4% to 0.6%

Naturally an increase in any one direction will give a proportionate decrease in the others. Thus in cannel coals a large yield in rich gas balances a small production of poor coke, while in some bituminous coals an extra amount of sulphur is offset by an increased yield of gas, or a harder, better coke. Comparative cheapness of price may also turn the scale in favor of an otherwise inferior local coal. But

under ordinary conditions a coal that will analyze about as above is the best for general use in coal gas manufacture.

Coal as delivered to the works should contain but little free moisture. Good Pittsburg coal usually runs about one per cent., while steam coal often shows three per cent., and twelve per cent. or more is not impossible.

W. B. Calkins says that there is an old-fashioned method in common use for the determination of total sulphur in coal and coke that is somewhat quicker than the regular Eschka's method, but must be watched more closely at the start. It consists of fusing up one gram of the coal or coke sample with about 9 grams of sodium carbonate and 5 grams of potassium nitrate. A full description of this method can be found in any good quantitative analysis text book. A rapid method for the determination of sulphur in coal and coke by Pennock and Morton is described in the American Gas Light Journal of January 11th, 1904.

Where the amount of coal handled in a plant is large, experimental plants of various capacities are found very useful for testing purposes. This is a general practice in England and in many of the larger companies in the United States.

In the "Gas World," October 28th, 1905, J. H. Brown, of Nottingham, criticize the methods of testing coal in English gas works. The first method of running the entire works on a certain grade of coal, he condemns as giving misleading results, owing to irregularity in the times of charging, weights and heats, etc., and the fact that the candle powers are not read often enough, and then only at the most advantageous times.

The second method of testing, with a small laboratory equipment of a capacity to take 2.24 lb. of coal to a charge, is also condemned by Mr. Brown, as his experience has been that these tests give a lower make per ton with higher illuminating power than under normal conditions, and even with the most carefully designed plant, the figures from tests under these conditions show a discrepancy in the results obtained for residuals.

The results obtained do not, as a rule, represent the true value of the coal when operated under ordinary working con-

ditions. Experimental plants consisting of full size retorts, with separate condensers, scrubbing and purifying apparatus, have been installed and have given good results. It may be considered better practice, however, where it is possible, to isolate one or more benches in a stack of retorts and to examine and test the coal under the actual working condition of the plant. In this method, it will be necessary to have a separate condenser, scrubbing and purifying apparatus, but often times a portion of the regular works' apparatus may be used. All figures for bench fuel, etc., are more apt to be correct, operating under these conditions.

Dr. Harrup in his book, "Gas Works Chemistry," pages 16 to 22, gives a short account of how to examine coal.

It is not customary to take the specific gravity of coal, but it may be easily obtained by resorting to the water displacement method, *i. e.*, by weighing the sample both in air and in water and dividing its weight in air, by its loss of weight in water.

In the experimental examination of all gas coal, there should be made, a determination of the amount of ammonia, sulphur, hydrogen, cyanogen, tar and coke in the actual working test, because, while a proximate analysis of the coal may show a large percentage of sulphur, it does not necessarily follow that a proportionate amount of this sulphur will be found in the generated gas, as some of the sulphur occurs in the coal combined as calcium sulphate and will remain in the coke. A gas coal showing a large percentage of sulphur may be advantageously used in the manufacture of gas, provided local conditions are such that this sulphur may be economically removed.

A method in use by the Semet-Solvay Company for determining the percentage of volatile matter is as follows:

"Place one gram of fresh, undried powdered coal in a platinum crucible, weighing twenty or thirty grams and having a tightly fitting cover. Heat over the full flame of a Bunsen burner for seven minutes. The crucible should be supported on a platinum triangle with the bottom six to eight cm. above the top of the burner. The flame should be fully twenty cm. high when burning free, and the determination should be made

in a place free from draughts. The upper surface of the cover should burn clear but the under surface should remain covered with carbon. To find Volatile Combustible Matter subtract the percentage of moisture from the loss found here."

Persons and Osborne state that few coal calorimeters are in use by gas companies.

Thirty different calorimeters are mentioned by Baehr in his paper on "Recuperative Benches" (Proc. Ohio Gas Light Assn., 1903), and he points out that a very full description of the different makes, together with methods of operating, can be found in Poole's "Calorific Power of Fuels."

Chollar ('03 QB 22) recommends the Parr calorimeter for coal and other solid and liquid fuels. Whysall ('03 QB 22) mentions the Simmance & Abady calorimeter. Professor Lord ('03 QB 22) says:

"In my opinion the best calorimeter for solid fuels is the Bomb calorimeter, of which there are several forms. The Mahler Bomb, manufactured by Golaz, in Paris, is one of the least expensive and has given most excellent results in my hands. It is lined with porcelain and will last for a large number of determinations. The platinum lined bomb used by Professor Atwater in his work on foods is a most admirable instrument. The various forms of calorimeter that use solid chemicals to bring about the combustion while they may give comparative results between different fuels that are valuable, introduce too many unknown factors in the reaction to make their results of absolute value."

This criticism of this type of calorimeters, of which the Parr is the most important, is reasonable.

Storage:

There is a diversity of opinion whether gas coal should be kept in storage or used up periodically. The consensus of opinion ('03 QB 3 and '04 QB 36-51) seems to be that gas coal deteriorates rapidly at first and then more slowly, and eventually loses practically nothing. Therefore, it may be better to keep coal in storage until necessary to use it, drawing daily from supplies of fresh coal.

Freshly mined coal will yield the most ammonia.

('04 QB 100-8.) At least three months' supply should be

carried for emergency purposes. Coal depreciates more rapidly when stored in the open than when under cover. A table of depreciation is given in London Journal of Gas Lighting, 6/12/06, p. 709, by Wolffram.

('06 QB 163.) The depth to which coal can be piled depends entirely upon its character. When low in sulphur it is often piled 20 ft. deep in the open for months.

Spontaneous combustion may occur in bituminous and semi-bituminous coals.

Coal stored in large quantities and deep piles is more apt to become ignited than when in smaller lots, and this is particularly so in the case of freshly mined coal.

There is more danger of excessive heating in finely broken coal because of the greater surface exposed for the absorption of oxygen; in fact, there are some grades of bituminous coal, very rich in volatile matter, which in a powdered state cannot be stored safely, except in very small amounts.

External heat, such as might be transmitted to a mass of coal through the walls of a boiler or retort setting, may increase the rate of oxidation until ignition results.

Coal which is not protected from the elements absorbs moisture, and the presence of moisture is probably the condition most favorable to spontaneous combustion. It not only chemically aids the oxidation and increases the rate thereof, but its presence in coals containing pyrites results in the disintegration of the coal, thus exposing fresh surfaces to the oxygen.

It has been the practice at Cincinnati, for many years, to store Pittsburg gas coals from the Second and Third Pool, which are reasonably low in sulphur. This coal has been piled in the open to a depth of 40 ft. without any fires resulting from this practice, or any serious losses occurring from deterioration in the coal. Kanawha West Virginia coals, and Fourth Pool Pittsburg coals, running high in sulphur, have given trouble from spontaneous combustion, and it has been found impossible to safely store these under the same conditions.

Briefly the most favorable conditions for spontaneous combustion are:

Stored in large quantities.
Freshly mined coal.
Finely broken coal.
Increase of temperature from external heat.
Exposure to weather.
Presence of moisture.
Presence of iron pyrites.

All coal piles should be provided with temperature pipes running to bottom of pile, through which thermometers may be lowered.

Handling:

The handling of coal is a very important item in the cost of gas production. The methods vary, from the use of the hand shovel in the smallest works, to the conveyor, bridge tramways and mechanical grab buckets in the larger plants.

The methods of handling coal are so many, that it is impossible to attempt to describe them here. Under Trustees' Answers to Practical Class Questions, Vol. XVI, Page 81, Proceedings A. G. L. Assn., is a short description of a modern coal conveyor. Various technical journals have printed many articles on this subject, the perusal of which is recommended to engineers considering installations, but the following comments on the subject should be considered in this connection:

Where it is possible, in all plants, both large and small, there should be constructed a railroad siding, if the works are near a railroad, or a coal unloading dock, if the plant is on a canal or tide water. Wherever possible the coal should be brought from the shipping vessel direct to the retorts, without being handled by hand, and with the least amount of handling by machinery. Railroad sidings should be elevated where possible, and provided with dumping hoppers, even in the smallest works. In larger works, these hoppers should be provided with mechanical conveyors or other suitable apparatus mechanically operated. Where the coal is stored, provision should be made for putting in and taking out of storage with the least amount of labor. This practice should be generally followed up to the mouth of the retort. The larger plants should include

storage hoppers and charging machines to supply coal to the retorts. It should be kept in mind that a considerable expense is incurred every time the coal is handled, which expense is greatly increased where hand labor is employed.

2. CARBONIZING (RETORT HOUSE PRACTICE.)

The Direct and the Producer Bench.

With the purpose of obtaining the greatest make of gas per mouthpiece per day, with the least fuel consumption and labor cost per ton of coal carbonized, the bench furnace and setting is designed to reach and maintain a high temperature with the smallest possible "volume" or amount of heat.

The direct firing bench is very similar to a boiler furnace, as the retorts are heated by the flame rising directly from the fuel bed. The application of the direct firing furnace to a boiler setting differs from this only in the two particulars that a variable large amount ("volume") of heat is necessary, while the lowest temperature at which the energy is available is only limited in theory by the boiling point of water at the pressure carried. For discussion of the application of indirect firing to boilers, see '03 QB 55, MacMillan, Tuttle, Doherty.

Formerly the direct firing bench was in universal use, but the number in use today suffers by comparison with that of producer benches. The first cost of the direct firing bench is the argument in its favor; it is found only in very small retort houses or in a few larger installations where the investment has been held down by some special cause. Its most serious disadvantage is the high fuel consumption. This may be stated in a general way to run one-half more than in the best form of producer bench. In his paper before the Western Gas Association, 1892, Bredel figures the comparative fuel consumption of the two types of bench as 26 per cent. for the direct firing, and 17 per cent. for the recuperative producer. E. J. Curley credits the free fire bench mentioned below with operating on 16.4 lb. of coal per 100 lb., or 24 per cent. of the coke made.

There is much difficulty in controlling the air supply. The amount and velocity of the air required to burn fuel, at such a rate as to keep up the heats, results in the admission of fully double the theoretical quantity necessary to burn to CO2 the fuel used. Besides carrying off heat bodily and suppressing the flame temperature, this excess air may also cause some loss of gaseous fuel by diminishing the energy of the flame combustion. An insufficient supply of excess air results in heavy losses of unconsumed combustible gases. This is the dilemna of direct firing, applied either to benches or boilers.

There are innumerable designs of direct-firing benches. E. J. Curley ('04 QB 68) describes a setting as follows:

"All the heat from the furnace rises and passes to the rear end of the bench, then comes forward to the front, passes down to and under bottom retorts, then to the rear end and to the stack. The nostrils, or spaces, between the saddle tiles, upon which the middle and upper retorts rest, are closed tightly, except the rear one, which is left open; about 15 inches space between last saddle tile and rear wall of bench. This latter is the only exit the heat has for eventually reaching the stack. So it can be readily seen that the interior of the bench receives all the heat, and also that the absence of flame in our stacks is indicative of that which is most essential—perfect combustion."

In the producer bench, instead of maintaining the fuel bed at an extremely high temperature with a flood of air, the checked and carefully regulated supply of primary air (bringing about only a partial oxidation of the carbon fuel) avoids the generation of so much heat in the fuel bed itself, and thus the first stage of the combustion proceeds at a comparatively low temperature. Whether the producer reaction is represented by the complete oxidation of carbon when the air enters the fuel ($C + O_2 = CO_2$), and the subsequent oxidation of overlying portions of the fuel bed by this CO_2 giving ($C + CO_2 = 2CO$) the CO sought, or is simply taken to be a direct union of carbon and oxygen to form CO ($2C + O_2 = 2CO$), the fact that the air has passed into and out of the solid fuel with the ultimate production of only the lower oxide shows, aside from any of the other facts in the case,

that the heat that has been liberated within the fuel bed, per pound of solid carbon consumed, is only a part of the heat energy expected from the *complete* oxidation of the carbon. Then with a given time rate of combustion the temperature of the solid fuel will be maintained at a lower point than would be found with the other process, and instead of relying largely on the sensible heat carried upward from the solid fuel, the CO burning to CO_2 in contact with a secondary supply of fresh air immediately around the retorts is chiefly relied on. Since there is a primary and secondary combustion taking place in the producer bench, and the purpose of the first stage is solely to supply the combustible producer gas for the second stage, the second combustion is concerned only with liberating heat in immediate contact with the retorts, and the fuel being gaseous makes it possible to deliver the heat where it is wanted. It is to this feature, the fact that nearly theoretical quantities of air can be safely used, and to the close regulation possible, that the producer or indirect firing bench owes most of its superiority over the direct firing bench. The recuperation of the incoming air by the hot spent products is responsible for the remainder of that superiority.

The Recuperative Producer Bench.

The essential features of the most complete form of gas bench are, on the one hand a narrow, deep bed of incandescent fuel, "producing from the air supplied from below a combustible gas consisting chiefly of CO and the residual atmospheric nitrogen, and on the other a system of parallel flues leading away the hot products of the combustion of the CO around the retorts, and pre-heating, through the flue walls, the incoming currents of air intended to supply the producer and burn the producer gas." There is much confusion as to the names by which this type of apparatus and its modifications are known to the gas industry. The furnace itself—the gas producing element—should be known uniformly as the Producer; this is in accord with the nomenclature common to other industries that utilize apparatus involving the producer reaction in the production of gaseous fuel, and does not clash

with the terms applied to water gas machines. The proper name for the air-heating element has been discussed at length ('04 QB 5), and the contributions while making an interesting showing of the state of opinion indicate the correct usage clearly. It is stated—and truly—that the words, "recuperative," and "regenerative," are commonly, though erroneously, considered as synonymous (Lea). One answer applies the word "regenerative" to a bench in which only the secondary air is pre-heated, and "recuperative" to the case where both secondary and primary are so treated; two others apply "regenerative" to the producer process. The correct application of the word "regenerative" is shown to be that method (to which the name of Siemens is attached) in which the products of combustion are passed alternately in opposite or different directions, heating in turn the walls of two sets of flues or checker brick chambers, through which the incoming air alternately enters. (Butterworth, Russel, Doherty, Baldwin, Baehr, Dewey.) Baehr points out that "it is not necessary that any reversal of direction of flow take place, although such is usually the case." This construction is used in heating furnaces for steel work, etc.; but it is not to be found in any retort bench in the United States (Dewey, Russel). There are coke oven installations now in operation that utilize the regenerative principle, but it is omitted in all those now building.

The word "recuperative" is properly applied to a bench which pre-heats either its secondary air, or both the secondary air and primary air, to any sensible extent on the *continuous conduction* principle mentioned in the first paragraph of this topic. Our ordinary bench of this type is properly a "producer-recuperator" (Doherty), or recuperative producer bench.

The most complete form of bench provides for thorough pre-heating of both primary and secondary air. Most of the smaller benches pre-heat only the secondary air. Many of the most modern installations have reduced the area in the primary air passages, figuring that enough annoyance is caused by clinkers, and the water used to avoid clinkers, without counteracting the influence of the water too much with hot

primary air. The terminology applying to this feature of partial or complete pre-heating has been the subject of discussion ('04 QB 6) and the contributions show at least two common understandings of the terms, "half depth," "three-quarter depth," and "full depth." A half-depth recuperative bench is one in which the secondary air only is passed through a process of recuperation (Williams, Baldwin, Baehr).

Whether a bench in which the secondary air is fully, and the primary air only partially, pre-heated, should be called a three-quarter depth or not is scarcely settled, though it appears that if the terms half-depth and full depth are to be taken as strictly applying to the amount of recuperation, especially in view of the tendency above mentioned toward decreasing the area of the primary air supply, "three-quarter depth" has no significance. (Dewey, Baehr, Baldwin.) Baehr has discussed this previously in his paper, "Construction and Operation of Benches." (A. G. L. A. Proc., 1903.) He says further:

"A three-quarter depth recuperative bench is one in which either the secondary air only, or both the secondary and primary air are pre-heated, but there is no clear, distinctive feature to mark such a bench decidedly in a class by itself. It seems to exist only as a slightly deeper recuperator than a half-depth, or a slightly shallower recuperator than a full-depth bench. I regard the term as a very unfortunate one, and it should be eliminated.

"The builders who originated the term 'three-quarter-depth,' did so largely because they found that in a great many gas works the retort houses were not as high from the cellar floor to the charging floor as their standard full-depth benches called for. These same builders had standard half-depth benches in which that same height was figured much lower than the height found in these old works. The result was that they designed a so-called 'three-quarter-depth' bench, which is distinguished, as previously noted, from the full-depth and half-depth benches merely as to height.

"In place of making a distinctive feature in such a bench in the line of some particular point concerning pre-heating of

the air, or something similar, the builders have simply made the distinction on the divergence of the vertical dimensions from their usual standard plans. The gas profession as a whole cannot countenance such a distinction, in my opinion, and I should say that their so-called 'three-quarter-depth' bench, if the secondary air only is pre-heated, should properly be called a 'half-depth' bench, and if both the primary and secondary air are pre-heated, it should properly be called a 'full-depth bench'."

Two interesting contributions, giving the alternative application of the terms "full," "half" and "three-quarter," follow. The measurements refer to the depth of fuel (Blinks, Thomas).

Half-depth,	36″	36″
Three-quarter,	(About 50″)	54″
Full,	60″—72″	72″

There are several well-known types of the full-depth recuperative-producer bench used in the United States, like the Parker-Russell, Bredel, or Bredel-Kloenne, Weber and Mitchell; and nearly every gas engineer with original ideas has tried one or more types of his own invention.

Having a producer that will contain a bed of fuel whose average depth when well pushed back, is from five to six feet, the conditions are nearly ideal for the generation of producer gas—without waste of fuel, high temperature in the fuel bed, or combustion under the producer arch from invasion of free oxygen. (All of these bad conditions would result from a shallow bed of fuel.) The producer is stoked from the charging floor or staging through a small door that can be quickly and effectually closed. The primary and secondary air supplies are controlled independently. The main control of the heats depends upon the chimney dampers, which regulate the "pull" of the chimney. There are often four of these, two directing a part of the spent gases under the ash pan, and giving an additional nicety of control, both in regard to the amount of water vapor mixed with the primary air, and to the distribution of flame in the four corners of the setting.

A properly designed. full-depth recuperative producer

bench makes possible a control of the combustion that approaches perfection.

Benches for Coal and Coke Fuel.

All new benches should be designed to use either coke or coal as fuel. The chief features required are good chimney draft, air ports and passages of ample size, large producer nostrils, a roomy combustion chamber, and products flues in the recuperation system of ample area, readily accessible for cleaning.

"A furnace to burn coal should be provided with a slanting feed channel extending down into the front of furnace so that a rod can penetrate any portion of the furnace from the feeding door or chute. When using caking coal for fuel in the furnace, a long bar, usually of 1¼" gas pipe, should be used to loosen up the caked mass and toss it back, also to even up the fuel which shrinks away from the sides of the hot chamber. The front of the furnace should have one or two step grates, and beneath, horizontal grate bars of 1¼" square iron of suitable length. The ash pit should be provided with a water-tight pan. The water supply is brought into the furnace and drips on the upper step grate, then to the second step grate, and then to the ash pan beneath. A furnace of this description, whether one-half-depth, or full-depth, will burn slack, nut or lump coal. Usually the same weight of coal as of coke is consumed in the furnace, but more secondary air is required for combustion when coal is used." (K. M. Mitchell, '03 QB 34).

The changes necessary in remodeling a bench to burn coal are along the lines above mentioned. "Coal can be used for fuel in any good plain bench with a little alteration. Almost any arch can be remodeled at a small cost, and a properly constructed furnace for burning a cheap grade of coal built in the same arch." (Dell, '04 QB 19.)

With benches of 9's I would recommend that the combustion chamber be enlarged, the nostrils or outlets from the furnace into the combustion chamber be made larger, and instead of the chimney outlets being just above the stack, they should

extend above the roof separately, or there should be one large stack acting for six benches, three on each side, connected by a breeching. This will insure better draft, and will also carry the smoke coming from a fresh charge of coal in the furnace, out of the house." (Mason, same reference.)

The Life of a Bench.

It is a difficult matter to say just how many months or years a bench *ought* to last, and absolutely impossible to say how long a bench *will* last. The fire clay materials may be of poor quality, due either to poor clays or improper manufacture. Even where good clays are used and the manufacturer understands how to mix them, the materials are sometimes rushed through the process, and the larger blocks that enter into the vital part of the bench are found, when split, to be green or soft near the centre.

The construction work on the bench often dooms it to early decay; this work, no matter who does it, deserves the most careful watching. Many benches are ruined in starting up by forcing them too rapidly to a working heat. The life of a bench is shortened where it is customary to let benches down and start them up again to meet variations in the send out. Benches are often allowed to get too hot and may almost be said to be melted down. The heat may localize in the front, back, or one side of the setting, and if this is not soon corrected the retorts may settle at the over-heated point. Again the combustion may take place partly below the producer arch, due to excessive draft and shallow fuel bed, or, to air leaking into the producer through the brickwork or charging door; if this happens, the producer arch will weaken under the high temperature resulting and the whole setting may sag toward the centre. Careless or excessive scurfing often shortens the life of a bench; the retorts are cracked by the scurfing bars and sometimes holes are knocked through them.

It is not difficult to determine when a bench has deteriorated beyond repair, though this is dependent on circumstances. But when several of the retorts have caved in or cracked past further patching, and the total make of the bench becomes so

low that the cost of operation is prohibitive, it is evidently time to tear out and rebuild. "The proper time to shut down a bench for repairs is when the cost of maintenance becomes more than the rate of depreciation of a new setting." (Doty, '04 QB A6.) "Whenever the loss occasioned by leakage, falling off in capacity, and excess of fuel required, is sufficient to pay for the repairs or renewals in about one year." (Same reference, Hagerty.)

A well-constructed bench of first-class material should last, with careful operation, three or four years, but with the high heats carried in these days its life is often less. Comparing the different benches of 5's, 6's, 8's and 9's, the life of each ought to be the same with the same management, although the life of a bench of 9's will in most cases be the shortest. The heat localized around the bottom middle retort usually causes it to give way and the setting settles. Benches of 6's and 8's, both being two retorts wide, are apt to give way toward the combustion chamber in the same manner.

"In our benches of 9's the centre bottom retort has lasted as long as the other eight; from 1,200 to 1,400 days (actual working days.") (Mann, '04 QB 80.) "The writer knows of settings of 9's where the centre bottom retort did not last to exceed six months." (Doty.)

The producer should outlast three or four resettings of the bench, and although the producer arch may have to be renewed, it is not necessary to tear down to the foundation and rebuild every time. The producer needs relining around the clinker line every two or three years at the very least.

Theory of the Furnace.

The free fire, or direct firing furnace, as applied to boilers, and as was formerly—and is today to some extent—applied to retort benches, burns a solid fuel like bituminous coal, coke, or coke saturated with tar, in a current of air either "drawn" through the fuel and setting by the aid of the draft of a chimney, or "forced" through by means of a fan or other mechanical blower. In the case of soft coal, containing a large percentage of volatile combustible matter, volumes of gases—hydrogen, hydrocarbons and carbon monoxide, are

evolved, in part by distillation due to the high temperature, and in part by what is called the "producer reaction." These gases, instead of burning immediately within, or at the upper surface of the fuel bed, escape unburned for some distance away, and since an excess of air is supplied they burn as they mix with this air and give the phenomenon called "flame."

To get a complete combustion of the gaseous fuel it is necessary to supply a wastefully great excess of air, a quantity as indicated by analysis of the chimney gas amounting to 50%, 100%, and often 150% greater than the supply theoretically required to combine with and completely oxidize to CO_2, and H_2O, the fuel used in the furnace.

The more modern practice of "indirect firing" now generally applied to retort benches is based on the producer reaction. Carbon burning with adequate supply of air forms carbon dioxide represented by the symbol, CO_2; carbon dioxide is the ultimate product of burned carbon, a compound which cannot be further oxidized, and in the formation of which the greatest possible amount of heat has been generated from the carbon. But if carbon burns with an insufficient supply of air, all of it that is oxidized cannot take the form of carbon dioxide, and a part at least of the gaseous product will be a compound called carbon monoxide; this latter gas is represented by the symbol, CO, which indicates that only half as much oxygen has been taken up in its formation as could have been taken up were the oxidation complete. This semi-oxidation has not released all the heat energy that it is possible to generate from carbon, and this half-stage product, CO, is a combustible gas capable of burning by absorbing a second equivalent of oxygen to form CO_2, thus producing the remainder of the available heat. To repeat: Sufficient or excess $O_2 = CO_2$; just half the sufficient $O_2 = CO$; a supply of O_2 between these two limits gives a mixture of CO_2 and CO.

Coke contains roughly about 90 per cent. carbon, and it has been found that if a deep bed of incandescent coke, supported within tight walls, is supplied with air from below, the gas emerging from the top of the bed of fuel will contain practically no CO_2, but will be rich in CO. This combustible gas, mixed with the residual nitrogen of the air used, is producer

gas. The chemistry of combustion, and the formation of producer gas, are given in detail at the end of this chapter by Prof. J. W. Richards.

Producer gas is generated commercially by "drawing" or "forcing" air through the incandescent fuel, with due regard for the following precautions. The fuel must be highly incandescent, it should "lie close," or compactly, there must be no black spots or blow holes through it, and the depth of the bed should be considerable, while the velocity of the air current should be so controlled in relation to the fuel depth as to give an adequate time contact. It is generally accepted that the reaction at the point where the air enters the fuel gives rise to CO_2, which is reduced ($CO_2 + C = 2CO$) as it passes through the incandescent fuel. The importance of good and sufficient contact is evident, when as much CO, and as little CO_2, as possible is the object sought.

This is all very elementary up to this point. With the introduction of water into the problem, the theory becomes more difficult—so difficult, in fact, that in spite of the simple description that is usually assumed to cover the process, it is doubtful if a really good grasp of the phenomena can be obtained until some chemical and physical data have been worked out that are not in existence today. It is customary to introduce steam along with the air that enters the fuel bed, either directly or by keeping a pool of water where it can evaporate and mix with the air. Since the hottest part of a fuel bed is found at the point where the air enters, some agent is necessary to prevent the ash from fusing into an indestructible mass. Water vapor in contact with the incandescent carbon suffers decomposition ($H_2O + C = CO + H_2$), generating carbon monoxide and free hydrogen. This step—known as the "water gas reaction"—instead of evolving heat, absorbs it, and instead of raising the temperature as the oxidation of carbon by free oxygen does, lowers the temperature. By maintaining a supply of water vapor along with the air, then, it is possible to prevent the overheating of the fuel bed, while at the same time the volume of producer gas is altered in composition by the CO and H_2 thus produced. The use of water vapor is not confined to the producers of

the retort bench, and it is generally true that the commercial producer gas of today is a mixture of straight producer gas and water gas.

It is necessary to add a very considerable amount of water vapor to prevent hard clinkers, but this proportion must be controlled or the fuel economy will suffer. The fire may be chilled back, or water vapor may pass through undecomposed, and by reacting with the producer gas before it reaches the combustion chamber, oxidize a part of the CO_2. Positive statements are common that this cannot happen because CO_2 breaks up at too high temperatures to combine with free hydrogen. The truth is that "the law of mass" enters into the process. But where reversible reactions like these are intimately connected with dissociation—about which not much is definitely known—it is not safe to theorize too far.

The heat losses due to the escape of hot products of combustion, and their bearing on the efficiency and economy of the furnace, may be calculated with extreme accuracy, providing certain data are at hand.

The amount and character of the combustible gases generated from solid fuel can be deduced from fundamental chemical principles; this data, and, the determination of the character of the chimney products, is easily obtained by means of the rapid methods which Prof. Richards has kindly prepared for the Board. These are given a few pages later.

The temperature of the waste products may be estimated closely by the aid of the revised temperature-color table for retorts given under the head, "The Charge." All that is necessary is a little study of the interior flue walls through the sight holes, and as these are observed usually from the gloom of the retort house cellar, the conditions are excellent for judging faint colors. If exact temperatures are wanted, determinations can be made with one of the several pyrometers on the market, preferably the Le Chatelier thermo-couple. For comparatively high temperatures, the "Seeger" fusible cones can be used, as these are generally procurable, beginning at about 1,700 degrees Fahrenheit.

The absolute amount of heat generated from the various solid and gaseous combustibles must also be known for ef-

CONSTANTS FOR CERTAIN GASES AND VAPORS

ALL VOLUMES OF GASES AND VAPORS ARE GIVEN AT 60°F. AND 30" PRESSURE.

I	II	III	IV	V	VI	VII	VIII	IX	X	XI	XII
NAME OF GAS OR VAPOR	FORMULA	MOLECULAR WEIGHT	SP. GRAVITY GAS OR VAPOR AT 60°F AIR = 1.0	CU.FT. PER POUND	WEIGHT 1 CU.FT. IN POUNDS	HEAT OF COMBUSTION BRITISH THERMAL UNITS PER CU.FT.	CUBIC FEET PER CU.FT. OF COMBUSTIBLE				
							REQ. FOR COMBUSTION		PRODUCTS OF COMBUSTION		
							AIR	OXYGEN	CO_2	H_2O	
CARBONIC OXIDE	CO	28	0.9671	13.503	07407	323.5	2.393	0.5	1.0	...	. . .
HYDROGEN	H_2	2	0.0692	188.620	.00530	326.2	2.393	0.5	...	1.0	. . . .
METHANE	OF THE PARAFFINE SERIES C_nH_{2n+2} CH_4	16	0.5529	23.626	.04234	1009.0	9.570	2.0	1.0	2.0	. . . .
ETHANE	OF THE PARAFFINE SERIES C_nH_{2n+2} C_2H_6	30	1.0368	12.594	07940	1764.4	16.748	3.5	2.0	3.0	. . . . .
PROPANE	OF THE PARAFFINE SERIES C_nH_{2n+2} C_3H_8	44	1.5206	8.587	.11645	2521.0	23.925	5.0	3.0	4.0	. . . . .
ETHYLENE	OF THE OLEFIN SERIES C_nH_{2n} C_2H_4	28	0.9676	13.493	.07410	1588.0	14.355	3.0	2.0	2.0	. . . . .
PROPYLENE	OF THE OLEFIN SERIES C_nH_{2n} C_3H_6	42	1.4514	8.997	11115	2347.2	21.533	4.5	3.0	3.0	. . . . .
ACETYLENE	C_2H_2	26	0.8984	14.534	.06880	1476.7	11.963	2.5	2.0	1.0	. . . . .
BENZENE	OF THE AROMATIC SERIES C_nH_{2n-6} C_6H_6	78	2.6953	4 845	.20640	3807.5	35.888	7.5	6.0	3.0	. . . . .
TOLUENE	OF THE AROMATIC SERIES C_nH_{2n-6} C_7H_8	92	3 1792	4 107	24345	4552.0	43.065	9.0	7.0	4.0	. . . . .
CARBONIC ACID	CO_2	44	1.5195	8.593	11637	.....	.....	.....	...	...	. . . .
WATER	H_2O	18	0.6217	21.004	.04761	.....	.....	....	...	...	. . . . .
OXYGEN	O_2	32	1.1052	11.816	.08463	.....	.....	....	...	...	..
NITROGEN	N_2	28	0.9701	13.460	07429	.....	.....	...	...	...	. . . . .
AIR	.....	....	1.0000	13.059	.07658	.....	.....	....	...	...	. . . . .

NOTES: COLUMN IV - SP. GR. = $\frac{\text{MOL. WT.}}{28.94}$

COLUMN VI - THE FIGURES GIVEN IN HEMPEL'S "GAS ANALYSIS", PAGE 375, WERE SELECTED FOR THE FUNDAMENTAL WEIGHT OF OXYGEN, NITROGEN, HYDROGEN, CARBONIC OXIDE AND AIR.

COLUMN VII TRANSLATED FROM JULIUS THOMSEN'S "THERMOCHEMICAL INVESTIGATIONS"

COLUMN VIII - AIR = 20.9 % OXYGEN + 79. % NITROGEN BY VOLUME

ficiency calculations. There are some discrepancies among the authorities, but these differences amount only to small percentages. The table here given may be accepted as representing a close approximation to the true values. The Board is making an effort to settle some of the disputed points.

The values commonly published for heats of combustion of gases in terms of cubic feet, vary according as they are based on the various values for unit weight, or are calculated as cubic feet at 60 degrees Fahrenheit, and 30 inches, or 0 degrees Centigrade, and 760 mm.

Having given the amount and composition of a mixture of gases, the heat capacity per degree of each of its components, and the temperature, the total quantity of heat energy contained is readily computed. Or, having given the amount and composition of the mixture, the heat capacity per degree of each of its components, and the total heat energy contained in it or generated within it by the combustibles from which it came, the theoretical temperature is readily computed. It is with the specific heat (heat capacity per degree) of the gases found in the waste products, that the greatest uncertainty lies. As some of the discrepancies reach as much as 50 per cent., it must be evident that some of these computations that have been published in times past, dealing not only with the bench furnace, but with fuel gas appliances, water gas machines, etc., are not reliable.

The Board has caused a study to be made of the available data on specific heats of gases at high temperatures (see Journal Gas Lighting, March 20, 1906).

Clinkering.

If some really effective means could be devised to prevent the formation of clinker in the bench furnace, it would result in a marked saving of labor and fuel. The clinker formation chokes the supply of producer gas, and, besides requiring a definite amount of labor to cut it out, there is also a varying loss of unburned coke with each operation, and an unknown cooling effect at the same time.

In a general way it may be said that high ash coal, and

especially ash containing a large percentage of iron and other fluxing matter, gives the most trouble. A query on this subject has brought out some authoritative information (Prof. A. S. Mitchell, '04 QB 373), which should be referred to in this connection. Usually coal containing much visible pyrites—that is, a coal which even to the eye contains abundant iron, sulphur, and other ash-forming bodies—will be found to give a deep, hard clinker and will demand for the producers more frequent attention.

It is customary to say that the use of water in the ash pan, mixing volumes of steam with the primary air, "rots" the clinker. The true explanation of this action is found chiefly in the endo-thermic decomposition of the water vapor as it passes with the primary air into the incandescent fuel, breaking up in the lower zone and absorbing heat in the same region where the air is generating heat most actively, thus limiting the temperature. Of course, if it were possible to apply this controlling influence uniformly and prevent the fuel bed from reaching the temperature at which the incombustible residue fuses, the ashes would come away in a finely divided state. The practical difficulty is that if too much water is used, much of it will pass undecomposed through the fire and interfere with the proper working of the furnace. In a properly handled bench, therefore, the water used is kept down to the lowest possible point. In actual working the needs of the furnace with regard to water supply is indicated by the nature of the clinker formed, and as this trouble increases the water evaporated must be increased and vice versa. This evaporation depends in part on the heat radiated from the fuel and partly on the area of the pool of water maintained in the ash pan, and in some benches is controlled by sending more or less waste gases through the flues running under the ash pan and specially provided for the purpose. If a very large excess of water is fed to the furnace it has an effect directly opposite to that intended, because the water lying in the ash pan is kept cool. Usually the water is fed into the furnace high up and descends along the bottom of the fuel bed over a series of drip plates, sometimes called the "stepped grate," to fall thence into the ash pan, and in ordinary running it is

adjusted so that the level stands at the overflow, but without wasting unnecessarily. The amount of water used deserves a very thorough study in each separate house, not because of the cost of the water, but because of the heat carried away when too much is used. Every works containing a laboratory equipment should keep in touch with the percentage of water vapor in the waste gases from the benches. The simplest way of doing this is to draw samples through a train of absorption tubes by means of a measuring aspirator, and determine the water absorbed by weighing before and after. Or, simply, the water evaporated per pound of carbon burned may be cut down to the lowest possible extent consistent with the clinker trouble. Having determined what is the best method of running, the care of the water may be turned over to the furnace men, who should go around frequently to clear the overflow pipes with a wire and to see that the water is adjusted according to instructions.

There is no doubt that some of the water used always passes through the fuel bed undecomposed; but such part of it as is broken up forms CO and hydrogen, which increases the combustible matter in the producer gas, and alters its composition, bringing into it a considerable percentage of hydrogen and decreasing the proportional nitrogen content. The water evaporated on the average is usually assumed to be about one pound to every three pounds of carbon formed. Of course it is greatest just after the furnace has been clinkered, when the fire is very hot on the grate bars; and decreases later, tending on the whole to a uniform regulation.

The mechanical operation of clinkering may be briefly described. Shut off the water, and if a special damper is used, close it, open the ash door and put in set of clinkering bars or spears. These should be shoved in as close above the clinker as possible; disregard of this precaution results in a needless loss of unburned coke. Then pull out the grate bars, letting the loose clinker and ashes fall away. Cut through the centre of the immovable clinker mass, working toward the back. Clear the rear of the furnace thoroughly and then clean off the side walls. Care must be used at the beginning, for the hot

mass falling into the ash pan will send out a scalding flood of water and steam. When thoroughly cleaned, put in the grate bars and pull out the spears, letting the fire down on the grate. Turn the water into the drip plates, clean out the ash pan, and clear the primary air ports.

Finally, if a special clinkering damper is used, open this and close the ash door. The entire operation should be completed in the least possible time.

Curley ('04 QB 44) advocates a clinkering damper as preventing the chilling and consequent hardening of the clinker and the shortening of the life of the bench by rapid temperature changes. Thwing approves of this for free fire benches burning coke, as preventing heat loss, but not when coal is burned, because "the use of dampers tends to clog up the flues leading from the furnace." Thomas believes that it would be dangerous if applied to producer benches. W. E. Brown argues that these dampers should be automatic. "We have stacks on our benches about 12 inches in diameter, and use a plate 14 inches in diameter suspended from a lever rigged in an arm which extends above the top of the stacks about 16 inches. To the end of the lever is attached a chain which is carried through pulleys to the retort house, and hooks are placed on the wall opposite to the front of the benches, by which one can regulate the draft as well as cut off the draft entirely, while clinkering." (Ganser, '04 QB 81.)

The Charge.

"Coal gas is almost entirely a mixture of hydrocarbon gases and vapors along with oxides of carbon, hydrogen, nitrogen, free and combined, and sulphur compounds. Coal tar, for the most part, consists of liquid and solid hydrocarbons. Both of these are produced by destructive distillation of coal, that is, by distillation at so high a temperature that the decomposition or 'cracking,' of hydrocarbons, is an unquestioned accompaniment—and as further proof we find free hydrogen to make up from 1/3 to ½ the volume of the gas, while free carbon is left in the retorts to the extent of perhaps 60 per cent. by weight of the original coal. The indications would

seem at first blush to point to the conclusion that coal, like crude petroleum, is a mixture of hydrocarbons in a state of mutual solution. Perhaps a part of the free carbon we know as coke existed in the coal free, but in a state of fine subdivision. At any rate, little is really known about the chemical combinations as they exist in the coal. Future discoveries will doubtless throw light on the exact composition of coal, and on the nature of the bodies that make up pitch. It is generally believed that coal is the residue from prehistoric vegetation, acted on by high temperature in the presence of moisture and pressure. And deposits of peat, brown coal (sometimes called lignite), bituminous coal, anthracite, and graphite, are held to represent successive stages in the gradual transformation.

"The temperatures that can be carried in clay retorts is far in excess of those that the old-fashioned iron retorts would stand, being commonly such as to give the inner surface a bright cherry appearance, and when a large gas yield is demanded, a full orange. The following table, prepared many years ago by Poulliet, has been copied far and wide and is generally accepted as giving the temperature indications of retorts. The original is in round numbers on the centigrade scale:

	Degrees F.
Incipient red,	977
Dull red,	1292
Incipient cherry red,	1472
Cherry red,	1652
Clear cherry red,	1832
Deep orange,	2012
Clear orange,	2192
White,	2372
Bright white,	2552
Dazzling white,	2732—2912

"Pyrometry was not as accurate a science then as it is now, and it is also to be noted that for the same temperature color varies with the nature of the heated body. Moreover, there is the personal equation, no two pair of eyes seeing alike; and the fatigue element makes the apparent color depend on the

illumination of the surroundings, so that it varies greatly between day and night. I have experimented with a fire clay surface and the thermo-electric pyrometer, and find the results as tabulated below, to be safe figures for the average eye, under ordinary retort house conditions:

	Degrees F.
Dull red,	1300
Dead cherry,	1500
Middle cherry,	1600—1700
Bright cherry,	1800
Rose,	1900
Deep orange,	2000
Middle orange,	2100
Bright orange,	2200

"Opportunity to see the inside of a heated retort only rarely comes, except after one charge has been 'burnt off' and drawn, and just before the next charge is put in. The color at that moment represents what may be called the normal temperature of the retort, but this temperature is by no means a constant condition during the carbonizing period. The fresh coal fuses and gradually evolves its volatile matter, the action being retarded by the immense amount of heat absorbed by the coal components, as they are fused, vaporized, or cracked. The heat of fusion and vaporization of one pound pure carbon, for instance, is 5641 B.t.u., or rather more than one-third of the net heat furnished by the complete combustion of one pound carbon in the air. Thus the charge is heated only slowly, and the inner surface of the retort is cooled at first, the retort and its contents rising to maximum temperature toward the end of the period. It is evident, then, that the gas (like steam from water boiling in an open vessel) is far cooler than the fire acting on it." (Harrop, Proc. Wis. Gas. Assoc., 1904.)

A question was introduced asking for an explanation of the low temperature of the gas in the stand pipe, "in view of the fact that it issues from the retort heated to 2,000° F." ('04 QB 23). Accepting the statement involved, several contributors explained the low temperature found in the stand pipe by the radiating influence of the pipe surface. One says

that the process of decomposition is still going on as the volatile matter leaves the retort, absorbing the sensible heat; this is a suggestive thought, but hardly probable.

The correct explanation is that, while the retort itself actually may have a temperature of 2,000° F., the coal does not attain that temperature until near the end of the charge, and a large part of the heat of the retort is taken up in the chemical changes of distillation and expansion of the solid materials into gases. The heat passing by contact from the retort into the coal may be said to become latent. This is very much the same case as a kettle of water on the fire; the fire is hotter than the escaping steam. (Lomax, Blinks, Sites, Doherty, Davidson, Schaeffer.)

"Charging a retort causes a sudden lowering of the temperature, the gas passing up the stand pipe before it has time to get heated. If the charge is left in long after the gas has been driven off, the temperature will rise in the stand pipe and stopped pipes will be the result." (W. E. Brown.)

"Euchene (Paris, 1900) found that the temperature of the volatile products (gas, tar, etc.) in the mouth of the retort, just above the coke, was 1,222° F. Part of this (the writer thinks) must be regarded as heat radiated from the coke and the walls of the retort, as Euchene found that in the stand pipe, between 7 and 8 inches above the mouth-piece, the temperature had fallen 800°. Heat is lost in the mouth-piece and stand pipes (1) by radiation, (2) by expansion in an ascending column, and (3) by the breaking up of some of the heavier hydrocarbons, which probably does not cease after leaving the retort." (Ferrier.)

Sites gives 150° F. as the approximate temperature for average stand pipe readings. A question has been asked, calculated to bring out definite information on this subject for different heights above the mouth-piece, and at different points in the carbonizing cycle.

Many different opinions exist as to the guiding principles to be followed in operating. The chief features in the prevailing belief are outlined below. First, it is agreed that the charge should be as heavy as the heat of the retort will carbonize in the time set. With particular reference to the rela-

tive desirability of varying charges or heats with changing conditions the following (Slater, special) may be added: "The charge should be as heavy as possible and still have the swollen coke allow room for the hook to be conveniently operated in drawing. This, of course, must be modified occasionally, according to the condition of the coal; for instance, if the coal runs very fine and wet. But, in general, the point is to charge heavily and regulate the heats according to the condition of the coal rather than regulate the coal according to the heat. This does not involve as much work as might seem at first thought, because the foreman usually has opportunity to exercise judgment in the selection of coal from various parts of his pile, so as not to require a sudden change of heat on account of variations in condition of coal."

In the manufacture of coal gas, naphthalene is formed only at high temperatures in the retorts ('04 QB A-3, Calkins, Gimper, Sherwood, Blinks). With most coals high heats reduce the production of ammonia per ton of coal carbonized ('04 QB 49, R. B. Brown, Beck, Eysenbach). Hartman, same reference, quotes 500° C., or 932° F., as the best temperature for maximum ammonia yield. This is perhaps based on the experiments of Ramsay and Young, quoted by Lunge, which showed that ammonia gas passed through heated tubes suffers almost no decomposition below the temperature mentioned, whereas at higher temperatures it tends to split up into nitrogen and hydrogen; but it does not follow that extremely low heats give the best ammonia yield. Maximum production of ammonia ('04 QB 49, Lindsey, Blinks) is found under conditions that give moderate gas yields like 10,000 cubic feet per long ton. According to Lunge, ammonia in the presence of red-hot carbon gives rise to ammonium cyanide and hydrogen, $2NH_3 + C = NH_4CN + H_2$.

Time contact is important both in the decomposition of ammonia, and in the decomposition of illuminants that results in the formation of naphthalene and the production of lean gas, and this element is to be minimized by the size and the shape of the charge, reducing the dimensions of the gas space above the charge and of the bare retort area. The cross-section of the ideal charge presents a minimum vertical depth in

the middle with an increasing depth towards each side; at least, this is in accord with the idea of the thin-charge gas retort system as opposed to the carbonization-in-bulk of the coke-oven system.

Comparing hand charging with machine charging, the advantages are decidedly in favor of the machine. The charge in the former case is liable to be uneven, piled up in the back, middle or front of the retort, although in some works where the charging and drawing are both done by hand some very satisfactory work is done.

Where hand charging is done in connection with machine drawing, the foreman should be particularly careful to see that the charge is well placed—as the machine in drawing is apt to conceal poor and uneven placing of the coal, especially where both sides of a house are drawing at the same time. The fact remains that the most important part of charging is to have the coal evenly distributed over the entire retort. This means an even absorption of heat and even carbonization of the coal.

Heats in a retort should be even to start with, and not too high—higher heats than necessary to carbonize the charge thoroughly will result in loss in illuminating power of the gas —loss in ammonia, and produce a poorer grade of tar.

Many times it will be found necessary, especially in the smaller works, to regulate the output of gas, when it may be necessary to reduce the yield per mouth piece, or even the yield per pound of coal. In such cases it will be the best practice to regulate the charge so that the heats will give the required yield and also regulate the time of carbonization. The length of the carbonizing period should not be longer than actually required to thoroughly burn off the charge—a longer period means poor gas, much fixed sulphur compounds, and stoppages.

Clean lump coal will give the best results, but with the proper heats the fine run of pile coal can be used with satisfaction. When the coal is very wet the moisture must necessarily be driven off before the carbonization of the charge really begins and this tends to reduce the heat of the retort.

Retort charging should be under the supervision of a

capable foreman to see that the heats are maintained, the charge is of proper weight and evenly distributed, and thoroughly burned off before drawing. Such supervision will be found to more than repay its attending cost.

Bench Regulation by Means of Temperature Measurements and Flue Gas Analyses.

Bench regulation by means of temperature measurements and flue gas analyses is the only thoroughly accurate method. It is impossible, however, to formulate hard and fast rules by which any and all benches should be operated. The pyrometer and gas analysis apparatus applied to the control of the bench will not determine how to make the best gas, how to get the greatest possible yield, etc. This is a subject for separate experiment and investigation, depending on local conditions. There are, however, certain limits between which preliminary regulation may be effected; certain average temperatures generally used in practice, certain typical analyses of producer gas, and waste flue gases; all of which stand for good conditions and fuel economy. The logical method of procedure for complete regulation of the benches would seem to be as follows:

A—Preliminary regulation—similar adjustment of all benches according to certain general rules.

B—Experiments with a view to determine the general system on which the retort house is to be worked, depending on local conditions. General character of heats, duration of carbonizing periods, use of coal or coke in bench furnaces, etc.

C—Constant checking and adjusting to perpetuate conditions found most satisfactory.

A pyrometer and a gas analysis apparatus are necessary for this work. Any first class pyrometer, giving accurate readings, will answer. The Le Chatelier thermo-electric couple has been found very satisfactory. It should be used carefully, and according to directions.

There is no doubt that the expense of scientific regulation

is very small compared with the saving which should result from greater fuel economy, better and more uniform gas, etc.

Practical Fuel Economy.

The choice between coal and coke as a bench fuel is dependent on local conditions and must vary as the conditions change. The price obtainable for coke is usually such that it pays to fire with coal, if the benches are constructed to burn it. As long as there is a good market for coke at a reasonable price, a gas company cannot afford to burn any of it except the breeze; but with the market dull, the price down, the coke pile growing beyond the limits of storage capacity, and no increase of sales in sight, the use of coke in the bench furnaces becomes compulsory.

Aside from the relative values of the two fuels in the market, coke has many attractions as a bench fuel. When it is drawn directly from the retorts into the furnace, there is a saving in the sensible heat contained, the handling cost is as near nothing as a handling cost can be, and it makes an ideal producer fuel, giving very constant results. Gas coal costs rather more than ordinary steam coal. A cheaper grade of steam coal might be used, but this means trouble in the producer with clinkers. The delivery of any kind of coal to the furnaces makes an extra cost item. But the chief problem lies in the combustion of the coal, because of the combustible gases that distill off each time the furnace is stoked, most of which passes off unburned into the air. This is due not only to the fact that the secondary air supply is regulated to take care only of the normal amount of producer gas, but also to the fact that the abnormal amount of gas generated for a period in the bench cannot escape as it should through the fixed chimney dampers, and crowds back the secondary supply of air. Blinks and Lea ('04 QB 82) suggested auxilliary forced draft to be applied for a short time after each stoking. If this solution is mechanically workable, there still remains the grave question as to whether such a dangerous device could be trusted in the hands of the retort house men. Failure to cut off the blast at the proper time

would have serious consequences. The Board has suggested that instead of using forced draft, the exact opposite but equivalent method be tried, of closing off the primary air supply with a special damper during this same period, thereby stopping the generation of producer gas and allowing the supply of secondary air to take care of the volatile matter distilled from the coal. This plan was submitted to some of the best retort house men in the country with request for an opinion, but though several have promised to experiment with it, no one has ever tried it. This is open to the same vital objection as the forced draft proposal, and, even if it will do the work, would have to be controlled by an automatic timing mechanism. McKee has presented a study of coal firing (Progressive Age, June 1, 1904), which depicts graphically the nature of the volatile fuel loss in relation to the stoking period. His contention is that the loss is less as the period is shorter.

When firing coal in the producer, care should be taken to break up the previous charge as this will be found to have caked; this is especially true if the coal used is very fine. The fresh charge should always be pushed well back to insure a uniform depth of fuel.

Below are some statements ('04 QB 70) regarding the efficiency of direct fired benches, 5's or 6's: "In some poorly designed plain benches in Detroit we used about 40 per cent. of the coke drawn, or 520 pounds per ton of coal carbonized. For years, in Grand Rapids, we ran plain benches on 30 per cent. to 33 per cent. of the coke drawn." (Tippy.) "We have the plain open settings of 5's and 6's, designed and erected under the supervision of my father, Thomas Curley, and on repeated tests (using cold, drenched coke), we have varied from 14.5 to 16 lb. of coke per 100 lb. of coal carbonized, or its equivalent, 23.5 to 24 per cent." (Curley.) "When the bench and setting are in good condition, 25 per cent.—otherwise 33 to 50 per cent.—of coke drawn." (Hagerty.) "Thirty per cent. of coke drawn, or 20 lb. to 100 lb. of coal carbonized." * * * "Benches of 8's show practically the same fuel economy obtained from best type of benches of 9's; that is, the pounds of bench fuel used for each type are the same,

approximately. Both use 300 to 320 lb. of bench fuel per ton of coal carbonized." (Doty.)

With the full recuperative producer bench better results than even the best of the foregoing are generally obtained.

Patching Retorts.

The most common breaks in retorts are as follows: A crack that may run in any direction in the retort; a piece of any size or shape that may have fallen out of the bottom, side, or crown; and a break in the side and lower corner next to the combustion chamber which is often weakened by the intense heat at that point and finally broken by the scurfing bar. Sometimes where drawing machines are used the back end of the retort is knocked off completely by the rake head.

Patching material or cement is made in a variety of ways, a common "home made" mixture being two parts fire clay and one part screened ground brick; and to each pailful of this mixture is added a good sized handful of borax. This is kneaded until quite stiff, and will stick to almost any spot where the temperature is sufficient to cause the flux to act. There are several proprietary patching cements on the market, such as Gerault's Patching Cement, Whittier's Retort Patching Mixture, Purimachos, Plutonic Cement, and others.

If the hole is of any size, a block is cut and fitted into it and then the patch is smoothed over with cement. But do not drop bricks, or blocks, in the hole until it (and also the setting) is filled. This is common practice in more than one house.

A hole in a retort can easily be measured by using a hand rake. Drop the rake into the hole, pull to one end, mark on the handle with chalk, then push back to the far end and mark again. This will give the length of the opening; the width can be judged near enough by the eye. Cut the block wedge shaped, so that the small end can drop through the hole; the large end, being a trifle longer than the break, should hold.

After patching, if any quantity of material has fallen through, it should be cleaned out of the setting, if it is pos-

sible to get at it. As most of the material will be found in the combustion chamber on the furnace arch, it can be scraped out with a small scraper on a long rod, care being taken not to block up the nostrils.

When a break occurs in the crown of a lower retort, it will be found very difficult, if not impossible, to patch, owing to the difficulty of working with long bars near the floor. But should the crown of a top retort fall in, it is an easy matter to cut out the front wall of the bench and put a tile over the hole and plaster with a thick layer of cement.

When a retort is beyond patching it must be bricked up tight just back of the mouthpiece to prevent cold air from being drawn into the setting.

Scurfing.

The causes generally credited with aggravating the deposition of carbon on the inner surface of the retorts, are: excessive temperature, "back pressure," and too small charges, which leave an unnecessary amount of bare surface exposed and increase the overlying gas space. In face of the prevailing belief, the Board wishes to express its doubts whether the condition of slight pressure in the retort can seriously influence the formation of carbon, and believes this subject should have further investigation. The action is conceded in the case of a new, porous retort where increased pressure must force gas into and through the material.

The proper frequency of scurfing is a debatable question. For good fuel results the less carbon the better. Where charging and drawing machines are used the accumulations must be removed more frequently than is absolutely necessary with hand operating. Eight to ten weeks has been given as a fair maximum, but it is added that this depends on the seal carried in the hydraulic main and many other conditions. Where decarbonizing tiles are used, a period even of this length means that four or five per cent. of the retorts are continuously out of service.

The original method of decarbonizing consisted in building a passage or flue along the bottom of the retort from the front

to within a few inches of the back, by laying two parallel rows of brick separated by a channel 2½ to 3 inches wide, and covering this with a third. The mouthpiece was then bricked up, with the exception of a small opening to admit air to the flue; the bridge cap was removed, the dip pipe plugged, and the stand pipe left to act as a chimney. The use of special arch shape scurfing tile has generally superseded the built up flue, and a special sheet iron scurfing lid is fitted on to the mouthpiece instead of bricking it up. In either case the coating of carbon is allowed to burn under the influence of the current of air drawn through until it becomes loosened from the sides of the retort, when it is broken out with a chisel bar and stored for sale. In case the supply of scurfing tile has run out and others cannot be procured at once, it is better to resort to the built flues than to allow the deposits to become too heavy. Care should always be taken never to have more than one retort "on carbon"—or two at the outside—in any one bench at the same time; not only is the cooling effect of the regular charge wanting, but the decarbonizing action generates considerable heat, and there is danger of overheating the setting.

The brick or tile method takes 24 to 36 hours, often longer, depending on the condition of the retort, heats carried, and thickness of the carbon. With a leaking retort it will often be found necessary to patch before the scurfing operation will be effective. The question of steam *vs.* air blast—and both *vs.* tiles—has not yet been decided.

The sum of the matter seems to be that the proper application of air and steam saves time, carbon, and wear and tear on the setting, while it is not yet determined whether the cost of steam, fittings, maintenance labor, and compressing the air do not offset the gain.

With regard to the use of air and steam, Doherty says ('04 QB 38): "We are successfully using a decarbonizer at Denver, in which both air and steam are used, and while it is not yet in perfect shape, the results secured from it are satisfactory, and we think much more desirable than from the use of either air or steam alone. A pipe of greater diameter incloses a pipe of lesser diameter, the outer pipe carrying

compressed air and the inner pipe carrying steam. Holes are drilled in the outer pipe for the escape of the air and steam in a manner calculated to cut channels through the formation of carbon, and smaller holes are also drilled in the inner pipe midway between the holes in the outer pipe, through which steam escapes into the space between the external periphery of the inner pipe and the internal periphery of the outer pipe. As this steam must travel forward or backward to find an opening in the outer pipe through which to escape, it keeps the temperature of the outer pipe down to a safe point, preventing rapid deterioration. The mixture of escaping steam and air should be so proportioned that the heat generated by the burning of the oxygen of the air and the freed oxygen of the steam is just sufficient to counterbalance the heat absorbed by decomposing the steam. It has reduced the time of decarbonizing 80 per cent."

With regard to the use of compressed air, R. B. Brown says ('04 QB 39): "The advantage of using compressed air for decarbonizing is the increase in the rapidity with which this operation can be accomplished, together with avoidance of any cooling of the surface of the retort. The disadvantages are the cost and the very high temperature produced in the interior of the retort, increasing the wear and tear on mouthpiece, stand pipes and scurfing fittings."

Heating Up and Letting Down the Bench.

In the case of a new bench, "drying out" is effected by keeping a very low fire on the grates of the furnace, the doors being left wide open to pass through the bench as much moderately warm air as possible to carry off the moisture. (Reference by Walton Forstall, '03 QB 32.) The main dampers are kept closed, the stoppers in the front wall are removed, and sometimes a temporary opening is made in the front wall just under the arch. After the drying has progressed for at least a week these temporary openings are closed and the chimney dampers are opened two or three inches.

Either in the case of a new bench in which the drying operation has proceeded thus far, or in an old bench that is

being started up, it is important to see that the flues are clean, to have the ash pan full of water to the overflow or drain, to prevent the grate bars heating up, to maintain a fire that can be fed through the clinkering door, and to open the primary air dampers sufficiently to keep the fire burning brightly. This firing should be kept up until the furnace arch shows a dull red through the sight hole of the combustion chamber. The secondary dampers must have been tightly closed up to this time, and all cracks in the brickwork should be plastered. It is customary during this stage to have the clinkering doors cracked to take care of any producer gas formed in case the grate bars become entirely covered with fuel. The next step is to fill the furnace with fuel. Put in the drip plates at the clinkering door, and begin to fill from the top, adding only small quantities at a time and taking care not to fill any faster than the fuel takes fire. Otherwise the flame of the burning carbon monoxide may be extinguished, and should any unburned gases fill the setting a serious explosion may follow.

"The fire is gradually increased until after 48 or 96 hours, it can no longer be fed through the clinkering door. The water is now started running on the grates, and primary air ports in main damper are opened wider. The fire is fed through filling door until the furnace is half full. As soon as the combustion chamber and lower retorts reach a good red heat and CO coming from the furnace is seen to burn at the nostrils when air is admitted to the combustion chamber, the secondary air can be turned on and the bench be brought up to a heat as rapidly as necessary, the furnace still being kept about half full of coke and being completely filled a few hours before the bench is put into action." (A. G. L. A. Proc., Vol. XVIII, page 41.)

The total time required to dry out a new bench and bring it to a working heat is to some extent a matter of opinion, and varies within large limits. One contributor says that two days are sufficient, another three days, with the added recommendation to bring the heats up gradually, and a third requires ten days. ('03 QB 32.) "It depends on how long the benches have been built, but at least two weeks will be required." (Tuttle.) "It depends on how much time you have,

but to do it properly two weeks should be taken to dry out and one week more to heat up to the working temperature; if a bench is forced beyond the above limit, its life will be shortened." (Mason.) "Keep a slow fire until the brickwork quits steaming, and then increase the heat slowly. Judgment must be used and experience is necessary, and no definite time should be set." (Elbert.) According to Russell, this depends on the kind of bench, and whether it is a question of best results or shortest time; on the assumption that the best results are desired, he would allow the bench to dry without heat for a week or ten days after the front is walled up. He continues: "The question then presents itself whether this bench is next to a hot bench, in a warm retort house, or in a new house without any heat, also whether the weather is warm and bright, or cold and damp. Of course such conditions make a great difference as to how much the bench will dry out in the time specified, so that the question is not so much the time as it is the condition of the brick work when the fire is first put in. After the bench has dried out to some extent from the atmosphere, say for a week or ten days in warm, dry atmosphere, or warm retort house, a slow fire should be started and kept going for at least two weeks, when it should be raised to the charging point, and this should require another week to accomplish. In other words, I think from the time the brick work is completed, provided you have good warm, dry weather, or a heated retort house, a month should elapse before the bench is charged. You can charge a free fire bench much sooner than a recuperator bench without danger of damage, and if your bench is full depth, the time allowed should be still greater. The benches are often heated up in a hurry and ruined, and the blame laid to the construction, design or materials entering into the installation."

The secondary air ports should be opened at the beginning not to exceed a half-inch and as the supply of producer gas increases the secondary air must also be increased or the primary air cut down. (" * * * watch for the appearance of blue flame at the nostrils. When this appears, open secondary air holes until flame almost disappears. * * * Close main dampers as heat increases." A. G. L. A. Proc.,

Vol. XV, page 26.) The firing below ought to take at least three or four days to bring the setting into shape to fire on top, and three or four days firing on top to bring the retorts to a proper heat.

"As soon as the retorts reach a good red heat they should be patched and charged with coal, the charges being left in until burned out. The bridge pipe covers should, of course, be closed before the retorts are charged. When the bench is nearly up to its proper working heat, regular charging can begin and when this heat is reached all openings must be carefully regulated. If necessary, an old bench can be started up in 60 hours, but it is better to proceed more slowly." (A. G. L. Proc., Vol. XVIII, page 41.)

The first two or three charges should be light, because the heats of a newly fired bench are often deceptive, looking hot enough to burn off a good charge, when in reality they will not take care of half a charge. It takes from twenty-four to forty-eight hours to bring the bench to its working heat after the first light charge is put in; during this time the furnace must be watched carefully to see that the proper combustion is taking place. As soon as possible, the hot coke from the retorts should be used in the producer.

Enough of the waste gases should pass under the ash pan to evaporate sufficient water to keep the clinkers soft. Clinker the furnace once in forty-eight hours, unless a very bad grade of coal is used, high in ash, containing a large percentage of iron and other fluxes.

For good results the producer must be kept full of fuel; with a shallow bed of fuel the combustion is likely to take place under the furnace arch, injuring it and reducing the heat in the setting itself by premature consumption of the gaseous combustible.

The operation of letting down benches deserves equal attention. Suppose there is a serious stoppage, or breakdown, and it is necessary to stop making gas for several hours. If the trouble comes suddenly, take off bridge caps to relieve the pressure; see that mouthpiece lids are tight to prevent air entering. If it is seen that the delay will last several hours, close all primary and secondary air slides tightly, and nearly

close chimney dampers. If the setting begins to get too hot, open secondary air slides and remove the sight blocks from front of setting to allow cool air to circulate through the setting.

Where it is a case of shutting down one or more benches because of falling off in demand, there is no hurry, and the operation of letting down can be completed without wasting gas from the bridge pipes. Close the primary air slides tight, leave the secondaries open, and check the chimney dampers. The retorts should be charged until the heats begin to fall, and then a heavy charge is put into the retorts and the lids closed for good. Leave the producer full of fuel. If gas making is to be begun again shortly, let enough primary air in to keep the heats well up, in order that they may be raised to the limit with a few hours' notice.

Where it is wanted to decrease the total amount of gas made without letting down a part of the benches completely, it is sometimes customary to lower the heats all over the house and increase the length of the carbonizing period.

The Even Distribution and Maintenance of Heats.

The operation of raising heats must be undertaken with care. If the proper combustion is taking place in the setting, prick up the producer with a small bar or hook; this will allow a free passage for the primary air, which will furnish more producer gas to the combustion chamber. If after two or three charges no material change is noticed, open the chimney dampers slightly—not more than $\frac{1}{8}$ inch at a time. Watch the heat for another charge or two, and if this brings no result, open the primary and secondary air slides $\frac{1}{8}$ inch each, carefully observing the combustion and length of the flame in the setting. This ought to bring up the heat, but results from changing dampers and slides should not be looked for in too short time; give the increased supply of gaseous fuel time to act. Twenty-four hours is soon enough to show a decided change. If possible, make a chemical analysis of the waste gases and see if all the producer gas is consumed. An ideal

analysis to work for would show less than one-tenth of 1 per cent. of CO and no oxygen.

Excess of heat in front or rear of setting usually indicates improper proportions in the nostrils of the bench, or partial stoppage of some of the nostrils. Plug up one or more of the nostrils in front or rear of arch, as the case may be, thus forcing the gases from the producer to be consumed in that part of the combustion chamber where they are needed. Dampers of special fire brick or tile may be applied to this purpose in nearly all benches without interfering with the operation. (Lea, Malone, '04 QB 76.)

Excessive heats will seldom localize at the top of the setting, but at the bottom this condition will be caused by two things, an excess of chimney draft or secondary air. Close the secondary air slides to lengthen out the flame in the combustion chamber, and check the chimney dampers till there is neither pressure nor vacuum, or a trace of pressure. This is determined by taking off the furnace cover, when the flame should fluctuate in and out of the opening, or, if there is no noticeable flame, throw a handful of coal dust into the furnace, or into the sight hole in the centre of the combustion chamber.

If the heat localizes on one side or other of the bench, correct this trouble so far as possible by regulating the chimney dampers.

A few of the causes of bad heats may be discussed. Poor heats may be caused by ignorant or neglectful clinkering. When the producer is clinkered, see that the work is done thoroughly; the sides and back must be clean and smooth before pulling out the clinkering bars in order to leave the freest possible passage for the primary air through the fuel. The nostrils in the producer arch may be stopped with patching material, or when soft coal is used for fuel they will tend to become stopped, or at least reduced in area, with soot. To clear the nostrils of solid obstructions, like tile, brick, or burnt patching cement, may be impossible without letting down the bench and cutting out the obstructions with tools, but the soot can be cleared readily by a bent rod, or a rod with a piece of chain two or three feet long hanging from one end; and this should be done every day or two as a matter of

routine. In a bench specially constructed to burn coal, and supplied with large square nostrils, this trouble is almost entirely obviated.

Careless patching will cause bad heats when blocks are dropped through the hole in the retort one after another in unsuccessful attempts to make a good patch. At least one instance has been known where it was customary to drop in blocks until a solid foundation had been built to hold the patch, and the foreman in this house could not explain why his heats were bad.

A choked main flue is sometimes responsible. This is not infrequently caused by an accumulation of dirt or soot following repeated cleanings of the chimney. Cases are not unknown where the main flue has been choked by bricks or other solid obstacles dropped in by accident, and such stoppages have been known that were not of accidental origin. The state of the flue is found by lowering a block fastened to a chain, or simply a heavy chain, from the top until it touches the bottom. If an obstruction is found it should be knocked to the bottom and taken out through the lower flue of the bench.

Poor heats are sometimes traced to the primary and secondary air ports; the continual drafts will draw in dust and dirt from the cellar and in the course of time enough will be deposited just inside the slides to reduce the areas noticeably. A small hoe-shaped scraper is used to keep these flues clean. Another point where the primary air supply is apt to be cut off is in the ports under the grate bars, which accumulate ashes from the clinkering operation; these should be cleaned every time the bench is clinkered.

Leaks in the recuperation cause bad heats. This may result in both the primary and secondary air reaching the waste gas flue without passing through the furnace, and the trouble can be easily detected through the sight holes; if producer gas is made to follow the waste gas flue as far as the suspected point, leaks of air into the flue will show themselves as small flames shooting out from the sides, top, or bottom, and the accumulations of loose dirt around these spots will glow

brightly. The only remedy for this is to stop the hole with fire clay.

Having gone through the bench from top to bottom and found flues, air passages and chimney clear and the furnace clinkered properly, and still finding that the heats do not show up as they should, the trouble must be looked for in some unusual cause, or else it must be concluded that the bench is improperly designed. One of these unusual causes mentioned is sometimes found at the bottom of the bench and may show on one side or both; this is moisture in the lower chimney flue, forming steam as it comes into contact with the hot brick or waste gases. This steam, if developed at a sufficiently rapid rate, will cause a back pressure and destroy the draft in that flue. This invasion may come from the subsoil, or the ash pan may be leaking. In the first case a drainage system may have to be put in; the second is remedied by putting in a new ash pan, or should the leak be a small one, covering the bottom of the pan with a layer of cement.

Good heats are often ruined on the operating floor by excessive scurfing and leaky retorts. The gas in the retort being under slight pressure will enter the combustion chamber and will interfere with the combustion by mixing unburned with the producer gas and secondary air, and by checking the draft which has been previously regulated with the chimney dampers for producer gas and air only. If coal is not used as fuel in the producer, a leak in a retort will show itself in the outpour of black smoke from the chimney. New retorts will affect the heats slightly until the pores have become filled with carbon. Dirty fuel, by preventing the free passage of the primary air, is a further serious cause of poor heats.

Minor Stack Design and Construction.

There is room at this point for comments on the design and construction of details ranging from retort to hydraulic main, which, if the right kind of material can be collected from reliable sources, will make this as valuable as any other one topic. Nothing has appeared in the 1903 or 1904 Question Box that will serve; a number of questions in the 1905 issue will make a beginning. A few points that may be considered

are shape and size of retorts, design and construction details of mouthpieces, self-sealing lids, methods of attaching to retorts, size, etc., of stand pipes, various features in bridge and dip pipes, anti-dip mechanisms, and the several features of the main itself, with special regard for weaknesses to be guarded against.

Charging and Drawing Machinery.

In answer to the query, "How large must a gas works be to warrant the adoption of charging and drawing machinery?" the following condensed discussion ('03 QB 15) is given: "Ten or twelve benches." (Bates.) "A capacity of at least one million feet per diem." (Whysall.) "Any retort house whose eventual capacity will reach 500,000 cubic feet per twenty-four hours can well afford to install power charging and drawing machinery, and on this basis the gas company can afford to put the machine in when its maximum make would run to one-half this quantity." (Carpenter.) "Very recently a combined charging and drawing machine has been put in operation in England which promises to fill the wants of medium-sized gas works of a capacity of 150 million to 200 million cubic feet per annum. The machine is operated by one man, who draws and charges the retorts, one man opens and closes the lids. The cost of operating, including furnace men bringing in coal and taking out coke, is about 30 cents per ton of coal carbonized. The cost of the machine is about $9,000.00. Cost of bins, coal breakers and conveyors will be about $4,000.00, making a total cost of $13,000.00 per complete installation for twelve benches of six retorts (capacity of machine is estimated at twenty benches). The saving in labor (with machine over hand labor) would be 50 cents per ton of coal. In a works carbonizing 21,900 tons of coal per annum, using a stoker and drawing machine, a saving of 50 cents resulted. From the above figures it is apparent we should be looking into the matter of stoking machinery. One authority, who is operating medium-sized gas works, said: 'It cost very little more in summer time working eight benches than when operating twelve benches.'" (K. M. Mitchell.)

"I believe that entirely aside from the labor question, power charging and discharging machinery can be used in any single stack retort house with a maximum output requiring six benches of sixes. This is assuming the use of the West combined type of power charger and discharger, which has a capacity of about sixteen benches of nines and requires but one man per shift for its operation, and on the assumption that one of these machines with its necessary compressor equipment, overhead hopper, and coal elevator could be installed at the particular point in question for $20,000.00, allowing 10 per cent. for interest and depreciation other than that taken care of in the ordinary repairs, wages of the two men to operate (assuming that the compressor would be taken care of by the boiler man who would be on the plant anyhow), and that the six-bench plant would be operated at a capacity of 200 maximum days per year, or say 72,000,000 per annum, with one extra man on the floor for each shift to care for pipes, etc., and the same allowance of men otherwise as for hand labor, the machines would work out to about 8.5 cents to 9 cents per thousand for retort house labor.

"Now, I believe that there are more plants of this size operating with all hand labor in which the retort house labor run over 10 cents than under 10 cents, and yet I also believe that they can be operated on 9 cents, and therefore state it as my opinion that the smallest number of benches which can be operated with power machinery is six benches of sixes. On anything above that the power machinery will show a saving over hand labor.

"There are, however, several types of manual charging and discharging machinery made in England which may be installed at a very much smaller capital cost and do away with from 30 to 50 per cent. of the men required in a small retort house. These machines can be used to advantage and at some saving in cost in any retort house employing over three benches, and for houses which will probably never exceed the equivalent of ten benches of sixes, they are probably better than the power machinery.

"Either type of machine has besides those enumerated the very decided advantage of being able to charge the retorts fully

up to their capacity, and to draw them without excessive labor on the part of the attendants, thus increasing the output per retort without increasing any of the other commensurately." (R. B. Brown.)

Further, the saving by machine charging and drawing is given ('03 QB 16) by Ramsdell in terms of retort house labor thus: "Slopers, 2¾ to 4 cents per thousand. Horizontals with charging and drawing machines, 3¾ to 4½ cents per thousand. Discharging machines only 6 to 7 cents per thousand. Manual labor, 9 to 10 cents per thousand." Carpenter (same reference) points out a discussion in the Journal of Gas Lighting for December 12, 1902, which he commends as conservative. He adds: "These figures are given on a minimum number of ten benches, making about 8,000 cubic feet of gas per mouthpiece per twenty-four hours. The possible saving can readily be derived from comparison of these figures with results that any of the members are obtaining." This article of Mr. Carpenter's gives a table that will show the total coal handled and the cost per ton, and the number of benches operated per man per day.

CALCULATIONS OF GAS AND AIR VOLUMES IN FURNACE COMBUSTION.

By Joseph W. Richards, A.C., Ph.D., Professor of Metallurgy in Lehigh University.

Volume of Gas per Ton of Coke.

If coke is burned to generate producer gas, the carbon of the coke appears in the gas as either carbonic oxide, CO, carbonic acid, CO_2, or methane, CH_4.

But, as one cubic meter of either of these gases, measured at ordinary temperature and pressure, contains 0.54 kilograms of carbon, we may also say that one cubic foot of either of these gases contains 0.54 ounces (.034 lb. avoirdupois) of carbon. It follows that for every 0.54 kilograms of carbon gasified there will be produced one cubic meter of either of

these gases, or of a mixture of these gases in any proportions whatever; or for each 0.54 ounce (.034 lb.), one cubic foot.

If we take a ton of coke containing 90 per cent. of carbon, of which 88 per cent. is gasified and 2 per cent. goes into the ashes, we may say that we have $2{,}000 \times 0.88 = 1{,}760$ pounds of carbon gasified = 28,160 ounces. This will produce $28{,}160 \div 0.54 = 52{,}150$ cubic feet of carbon-bearing gas (CO, CO_2, or CH_4). If then we know the proportion of these gases in the producer gas made, by means of an analysis, a simple division gives the volume of producer gas made per ton of coke burned.

Supposing the producer gas (dried) to contain by analysis:

Carbonic oxide	(CO).....	28 parts.
Hydrogen	(H_2).....	12 "
Carbonic acid	(CO_2).....	3 "
Methane	(CH_4).....	1 part.
Nitrogen	(N_2).....	56 parts.

then the carbon bearing gases are $28 + 3 + 1 = 32$ per cent. of the volume of the gas, and the volume producer gas (dry) made per ton of coke, in the above example, will be $52{,}150 \div 0.32 = 162{,}970$ cubic feet. (All of these gaseous volumes are for gas measured cold, at atmospheric pressure.)

Per metric ton of coke, 1,000 kilograms, the exactly similar calculation would show:

Carbon in coke..... 900 kilograms.
Carbon gasified ..... 880 kilograms.

$$\text{Carbon-bearing gases formed} = \frac{880}{0.54} = 1{,}630 \text{ cubic meters.}$$

$$\text{Producer gas formed.....} = \frac{1630}{0.32} = 5{,}093 \text{ cubic meters.}$$

Pounds of Steam per Ton of Coke.

This is most quickly obtained from the weight of hydrogen gas in the producer gas, assuming that the free hydrogen represents the steam which was admitted. The basis of this calculation is the datum that one cubic meter of hydrogen gas (at ordinary temperature and pressure) weighs 0.09 kilo-

grams, or one cubic foot weighs 0.09 ounces (.0056 lb.) avoirdupois, and that water is one-ninth hydrogen by weight.

The calculations, using English measures, are:

Hydrogen in 162,970 cubic feet of gas = 162,970 × 0.12 = 19,556 cubic feet.

Weight of this hydrogen:

19,556 × 0.09 = 1,760 ounces = 110 pounds.

Weight of steam required = 110 × 9 = 990 pounds.

The calculations in metric measures, per metric ton of coke, are:

Hydrogen in 5,093 cubic meters = 5,093 × 0.12 = 611 cubic meters.

Weight of hydrogen = 611 × 0.09 = 55 kilograms.

Weight of steam required = 55 × 9 = 495 kilograms.

Volume of Air Required per Ton of Coke.

The volume required for the producer can be calculated directly from the chemical equations which occur in the producer. If no steam is used, the equation is, theoretically, simply:

$$2C + O_2 + 4N_2 = 2CO + 4N_2$$

To interpret this in the simplest way, we should understand that O_2, N_2, or CO represent, respectively, *molecules* of those gases, and, therefore, by a fundamental law of chemistry (Arogadro's law) equal relative volumes of those gases. With O_2 we take $4N_2$, because when air is used you get practically four volumes of nitrogen for every one volume of oxygen used. The right side, or product side of above equation, shows that theoretical producer gas, using dry air, consists of one-third carbonic oxide to two-thirds nitrogen (2 : 4).

We can further interpret the equation very simply in relation to both weight and volume, if we place the chemical combining weights under each member, as follows:

$$\begin{array}{ccccccc} 2C & + & O_2 & + & 4N_2 & = & 2CO & + & 4N_2 \\ 24 & & 32 & & 112 & & 56 & & 112 \end{array}$$

and make use of the following principle: If we call these relative weights kilograms, each molecule of gas in the equation represents 22.22 cubic meters; if we call these relative

weights ounces (avoirdupois), each molecule of gas in the equation represents 22.22 cubic feet. (If pounds, each molecule represents 355.52 cubic feet.)

The above equation tells us, therefore, that in producing theoretical producer gas with dry air, 24 kilograms of carbon gasified require 22.22 cubic meters of oxygen, which brings with it 88.88 cubic meters of nitrogen (=111.1 cubic meters of air), producing 44.44 cubic meters of carbonic oxide, mixed with the nitrogen used, making 133.32 cubic meters of gas.

Similarly, each 24 ounces (1.5 lb.) of carbon gasified requires 22.22 cubic feet of oxygen, equal to 88.88 cubic feet of air, producing 111.1 cubic feet of producer gas.

If steam is used, it gasifies carbon in the proportions indicated by the following equation:

$$\underset{12}{C} + \underset{18}{H_2O} = \underset{28}{CO} = \underset{2}{H_2}$$

From which we deduce that 12 kilograms of carbon thus gasified require 18 kilograms of steam, and produce 22.22 cubic meters (1 molecule) of carbonic oxide and an equal volume of hydrogen. For 12 ounces (.75 lb.) of carbon thus gasified there is required 18 ounces (1.13 lb.) of steam, and there is produced 22.22 cubic feet of carbonic oxide, and 22.22 cubic feet of hydrogen.

It is therefore a simple matter to calculate how much air is needed per ton of carbon gasified, if it is known how much steam has entered, and has burned carbon. If, for instance, 500 pounds of steam is sent into the producer per ton of coke charged, this 500 pounds will gasify $500 \times \frac{12}{18} = 333$ pounds of carbon, leaving the rest, say $1{,}760 - 333 = 1{,}427$ pounds of carbon to be gasified by air. Since 24 ounces = 1.5 pounds of carbon gasified by air requires 111.1 cubic feet of air, 1,427 pounds will require $111.1 \times \frac{1{,}427}{1.5} = 74 \times 1{,}427 =$ 105,600 cubic feet.

Another way of stating the matter is to calculate that since one pound of steam gasifies $\frac{12}{18}$ = two-thirds of a pound of carbon, and the same weight of carbon would be gasified by $111.1 \times \frac{0.67}{1.5} = 49.62$ cubic feet of air, we can therefore say that each pound of steam used replaces 49.6 cubic feet of air. A similar statement in the metric system is that each kilogram of steam used replaces $111.1 \times \frac{0.67}{24} = 3.10$ cubic meters of air.

Mixed Air and Steam Required.

If the producer is fed with a mixture of air and steam in known proportions, as, for instance, with 100 cubic feet of air for every pound of steam used, we can calculate easily how many cubic feet of air with its accompanying steam are required. Each pound of steam gasifies two-thirds of a pound of carbon, and each 100 cubic feet of air (dry) gasifies $\frac{1.5}{111.1} \times 100 = 1.35$ pounds. Such a mixture therefore gasifies altogether $1.35 + 0.67 = 2.02$ pounds of carbon, and per ton of coke, gasifying 1,760 pounds of carbon, there is required $\frac{1,760}{2.2} = 871$ times the above quantities, *i. e.*, 871 pounds of steam and 87,100 cubic feet of air. The similar calculations for the metric system would be based on the data that each kilogram of steam gasifies 0.67 kilogram of carbon, and each 100 cubic meters of air $(\frac{24}{111.1} \times 100 =)$ 21.6 kilograms of carbon.

Volume of Air Actually Used.

If in any given case the composition of the gases is given, then the volume of air and weight of steam actually used can be calculated. Assume the composition of the gas to be as

already assumed (CO — 28, CO_2 — 3, CH_4 — 1, H_2 — 12, N_2 — 56), the volume of gas per ton of coke is first calculated as follows:

Volume of carbon-bearing gases in 100 cubic feet = 32 cu. ft.

Carbon in these gases = $32 \times 0.54 = 17.28$ ounces = 1.08 lb.

Assume carbon gasified per ton of coke = 1,760 lb.

Volume of producer gas per ton of coke

$$\frac{1{,}760}{1.08} \times 100 = 163{,}000 \text{ cu. ft.}$$

The weight of steam used will be thus calculated:

Free hydrogen present = $163{,}000 \times 0.12 = 19{,}560$ cu. ft.

Weight of this hydrogen = $19{,}560 \times 0.09$ = 1,760 ounces = 110 lb.

Weight of steam used per ton of coke = 110×9 = 990 lb.

The volume of air used will be thus obtained:

Nitrogen in producer gas = $163{,}000 \times 0.56 = 91{,}280$ cu. ft.

Air required to furnish this $\frac{91{,}280}{0.79} = 115{,}540$ cu. ft.

Steam used per 100 cubic feet of air =

$$\frac{990}{115{,}540} \times 100 = 0.857 \text{ lb.}$$

Combustion of Producer Gas.

The simple equations of the combustion are as follows:

$$2CO + O_2 = 2CO_2$$
$$2H_2 + O_2 = 2H_2O$$
$$CH_4 + 2O_2 = CO_2 + 2H_2O$$

Remembering that CO, O_2, CO_2, H_2O, CH_4 are symbols representing a molecule of each gas, and the number of these molecules in the equations represent the relative volumes of the gases concerned in the combustion, we may construct the following table for the combustion of our assumed producer gas, showing the amount of air theoretically required:

	100 cubic feet of gas.	Oxygen required.	CO_2 formed.	H_2O formed.
CO	28	14	28	..
H_2	12	6	..	12
CO_2	3	..	3	..
CH_4	1	2	1	1
N	56	..	..	..
		—	—	—
Totals		22	32	13

There is therefore required 22 cubic feet of oxygen, which will be contained in $\frac{22}{0.21} = 104.8$ cubic feet of air (carrying also $104.8 - 22 = 82.8$ cubic feet of nitrogen). The gaseous products of this combustion would be, theoretically:

Nitrogen	56 + 82.8 = 138.8	cubic feet	= 75.5	per cent.
CO_2	32.0	" "	= 17.4	" "
H_2O	13.0	" "	= 7.1	" "
	183.8			

Or, if the chimney gas is dried before being analyzed, it would contain nitrogen 8.2 per cent. and carbonic acid gas 18.8 per cent.

Volume of Chimney Gas.

This is most simply calculated from the amount of carbon it contains. If, for instance, an analysis of the dried chimney gas shows it to contain

Nitrogen	82.4 per cent.
Oxygen	1.5 " "
Carbonic acid	16.1 " "

we could calculate at once, as has already been done, that if 1,760 pounds of carbon are gasified in the producer per ton of coke used, there must be produced from this $1{,}760 \times 16 \div 0.54 = 52{,}150$ cubic feet of carbon-bearing gas. Since this is all in the chimney gas, forming 16.1 per cent. of it, the volume of (dried) chimney gas per ton of coke used is $\frac{52{,}150}{0.161} = 323{,}900$ cubic feet. But the practical volume of

chimney gas must include also the calculation of the volume of water formed, this is quickest done by noting that for every 32 volumes of CO_2 formed (in the combustion of 100 cubic feet of gas) there is 13 volumes of steam. The water vapor in the chimney gases is therefore $52{,}150 \times \frac{13}{32} = 21{,}180$ cubic feet, which, added to the volume of dry chimney gas, gives a total volume of gas going to the chimney 345,080 cubic feet per ton of coke.

Actual Volumes of Flue Gas.

The volumes so far used are all assumed at the freezing point. But the gases in the flues are all hot, and for practical calculations we must allow for the increased volume. The real volumes in the flue will be the calculated volume (not forgetting to add in the calculated volume of water vapor), increased 1/273d for every degree Centigrade of temperature, or 1/492d for every degree Fahrenheit of temperature above the freezing point ($F^0 - 32^0$). This gives the actual volume of hot gas per ton of coke used, for instance, and dividing by the time of consuming one ton in seconds, will give the volume of hot gas passing through the flue per second; this divided by the cross-section of the flue in square feet will give the actual velocity of the gas current in feet per second. This will, of course, vary as the temperature varies; other things being equal, the lower the temperature the lower the velocity of the gas current. All these calculations can be turned around; if all the data are known except any one of them, it can be calculated. The most important data for use in the calculations are, in any case, the analyses of the gases.

Combustion of Illuminating Gas.

The simple chemical equations for complete combustion are:

$$2CO + O_2 = 2CO_2$$
$$2H_2 + O_2 = 2H_2O$$
$$CH_4 + 2O_2 = CO_2 + 2H_2O$$
$$C_2H_4 = 3O_2 = 2CO_2 + 2H_2O$$

The combustion may be tabulated thus:

100 parts of gas (assumed composition.)	Oxygen required.	CO_2 formed.	H_2O Vapor formed.
CO_2 — 1.8	....	1.8	...
C_2H_4 — 5.9	17.7	11.8	11.8
O_2 — 1.1	(1.1)	...	...
CO — 3.6	1.8	3.6	...
CH_4 — 42.8	85.6	42.8	85.6
H_2 — 40.9	20.45	...	40.9
N — 3.9	....	...	...
Totals	124.45	60.0	138.3

The 124.45 cubic feet of oxygen will be contained in $\frac{124.45}{0.21}$ = 592.6 cubic feet of air. The nitrogen in the air used is 592.6 — 124.45 = 468.1 cubic feet, making the total products of combustion, with the theoretical amount of air for complete combustion:

Nitrogen 468.1 + 3.9	= 472.0	cubic feet	= 70.4%
Carbonic acid gas	60.0	" "	= 9.0%
Water vapor	138.3	" "	= 20.6%
Total	670.3		

If the water vapor be removed before analysis, the theoretical products will be nitrogen 88.7 per cent., carbonic acid 11.3 per cent.

Metallurgical Department Lehigh University, Jan. 28, 1905.

---

3. CONDENSATION.

In that section of the Question Box relating to Condensing and Scrubbing of Gas, the information is very fragmentary, and does not at all cover the subject. The answers lack completeness, due, in many cases, to the indefiniteness of the question asked, and are in many cases plainly contradictory, so for the above reasons this subject has been generally re-

written, embodying what satisfactory material was obtainable from Question Box.

In the production of illuminating gas from bituminous coal, and also in the production of carburetted water gas, or straight oil gas, the gas leaves the generating apparatus charged with vapors. These vapors are composed chiefly of members of the benzene, or closed ring series of hydrocarbons, and are mainly high boiling, low tension compounds. There are also present certain small quantities of vapors of the same series possessing a high vapor tension, together with a large amount of water vapor and such generally recognized gaseous impurities as sulphuretted hydrogen, ammonia, carbon bisulphide and cyanogen. Some of these vapors exist as such only at relatively high temperatures, hence are dropped close to the generating apparatus; others may reach the distribution system, and, though possessing a high photogenic value and desirable for this quality, will precipitate upon a slight reduction of temperature, tending to cause stoppages in the mains and services. Others may be carried along to the burner, causing trouble there, and still others are objectionable, due to the noxious nature of their products of combustion. Hence, it is desirable and even necessary to remove most of the above compounds from the gas prior to its distribution. This may be done to a great extent by simply lowering the temperature of the gas, or "condensing" it. The vapors are then reduced to a liquid and carry down with them appreciable quantities of the impurities. For this reason, cooling of the gas is necessary, and especially constructed apparatus must be installed to make this process of condensing as thorough as possible.

On account of the tendency of the vapors to be entrained, or carried along by the gas, it is necessary, in addition to condensing it, to provide some method of scrubbing, in order to mechanically remove this suspended matter.

As stated before, the amount of sulphur and other impurities removed in this way is large, but purification at this stage is not complete, and it is necessary, also, to provide purifiers, and (in respect to coal gas) scrubbers to remove the greater portion of the sulphuretted hydrogen and ammonia. Scrub-

bing and purification are, therefore, closely associated with condensation, and should in a measure be considered with it.

It will be seen that condensation is the first step in the purification of the gas, and also that condensation, and, therefore, purification, commences in the hydraulic main or wash box, as the case may be, or as soon as the gas is cooled in the slightest degree.

Unfortunately, in the removal of the heavy vapors, a certain amount of valuable enriching hydrocarbons are also removed, and in many cases are completely lost in the condensation. It follows, therefore, that the most efficient condensation will minimize this loss, and at the same time remove as completely as possible the undesirable constituents.

W. H. Gartley, in a paper read before the American Gas Institute, entitled "Delivery of Uniform Candle Power" (see Proceedings of the American Gas Institute, 1906, page 593), quotes A. E. Forstall as follows:

"Condensation is perfect only when the gas leaves the apparatus carrying such an amount of the most valuable hydrocarbons originally present in it, as it passes out of the retort, as will just fall short of saturating it at the minimum of temperature and maximum of pressure to which it will be subjected during its journey to the burner."

The above statement presents concisely the object aimed at in theoretically perfect condensation; hence, a description of the apparatus and methods used to approximate these results as closely as possible should be considered under the head of condensation.

Before taking up the mechanical side of the question, the theory from which the above principle was evolved will be considered. Mr. Gartley, in the paper above referred to, has gone into the subject fully, and his presentation of the same confirms fully Mr. Forstall's observations, and explains why the process of efficient condensation is not as simple as it at first appears. Mr. Gartley's paper is, therefore, quoted at length as elucidating a further statement of Mr. Forstall's, which is as follows:

"The attainment of this perfection of condensation is rendered difficult by the fact that the various hydrocarbons have a solvent action upon each other, which makes it almost

impossible to condense out the vapor of any one of these, even though its boiling point be high and its tension low, without at the same time bringing down more or less of those vapors with low boiling points and high tensions that, if diffused in the gas, after the heavy vapors have been removed, would be retained under all conditions of temperature and pressure met with during distribution; while, on the other hand, the lighter vapors hold up at low temperature some of the heavy vapors that but for this mutual action would be condensed out at comparatively high temperatures."

Theory of Condensation.

Mr. Gartley says:

"The solvent action that these hydrocarbons have upon each other, referred to by Mr. Forstall, will bear a little closer consideration. When a gas, saturated with hydrocarbon vapors is cooled an infinitesimal fraction of one degree, it will be in equilibrium with its condensate, and the proportion of the component vapors in the gas and in the liquid bear a fixed relation to each other. This is expressed in a law formulated by Henric Anderson, of Philadelphia, as follows:

'When a gas is in contact with a mixture of liquid hydrocarbons under condition of equilibrium, each of the components of the liquid makes its vapor tension valid in the gas in proportion to its molecular percentage in the liquid.'

"Let us suppose, for example, a gas at 50° F., standing in equilibrium over a condensate made up of equal parts by weight of Benzene and Toluene.

"The weight of a molecule of Benzene, C_6H_6, is 78, and of Toluene, C_7H_8, is 92. The number of molecules of each in a mixture of equal parts by weight would be in proportion for Benzene $\frac{50}{78}$, and for Toluene $\frac{50}{92}$, or as 641 to 543, and the molecular percentage of Benzene would be $\frac{641}{641+543} = 54.1\%$, and molecular percentage of Toluene would be $\frac{543}{641+543} = 45.9\%$.

"The vapor tension of the composite vapor in the gas would be:

Vapor Tension at 50° F.

From Benzene 0.541×45.2 mm. $= 24.453$ mm.
" Toluene 0.459×10.5 " $= 4.819$ "

29.272 "

And the percentage of vapor in the gas would be $\frac{29.272}{760}$ $= 3.85\%$, of which Benzene would be $\frac{24.453}{29.272} \times 3.85\% = 3.22\%$, and Toluene would be $\frac{4.819}{29.272} \times 3.85\% = 0.63\%$.

"We see that a gas standing over equal parts by weight of Benzene and Toluene, with which it is in equilibrium, will contain 3.22%, by volume, of the vapor of Benzene, and 0.63%, by volume, of the vapor of Toluene. The deduction follows that when a gas, saturated at 50° F., and containing 3.22%, by volume, of Benzene and 0.63%, by volume, of Toluene, is cooled very slightly, it will drop out Benzene and Toluene in equal proportions as to weight. The weight of equal volumes of vapors of Toluene and Benzene being as 1 to 1.18, there is left in the vapor in the gas an increased percentage of Benzene to Toluene. With such a vapor the condensate of equal parts is not in equilibrium, and rearrangement results through which some of the Benzene vapors in the gas go to the condensate. This is what Mr. Forstall refers to as solvent action.

"When a gas, saturated with hydrocarbon vapors, comes in contact with a condensate from which it is far removed from equilibrium, the rearrangement to establish equilibrium becomes more violent, and we say that the gas has been shocked. This explains, also, why it is important to remove from contact with the gas in the process of condensation the condensate at about the temperature at which it was deposited. To do this requires large volumes of cooling space, which cooling must be conducted in gradual steps.

"While the proportion of high to low tension vapors in the gas is constantly increasing during the condensation process, bear in mind that because of the cooling the composite vapor tension is decreasing.

"It also appears that we cannot expect theoretically an entire elimination of the tar vapors from the gas. At each step a portion is taken out, indeed, a large per cent., but even with a perfect dephlegmation there would be a trace left to be carried to the burner.

"In water gas practice, the problem of condensation reduces itself to the elimination from the gas of as much of the vapors of tar as possible, without leaving behind in the tar any of the high tension vapors that can be carried to the burner. To do this, the gas should be cooled as gradually as the condensing apparatus permits, and should pass into the purifiers at not less than 100° F., and through them without any loss in temperature. Under these conditions, the gas will reach the inlet of the commercial holder with only such changes in temperature throughout the year as the varying atmospheric temperatures between the purifier outlet and the commercial holder inlet may effect. During the process of condensation and purification, the temperatures maintained should be those best suited for the mechanical and chemical reactions, and should be unaffected by the varying atmospheric temperatures at different seasons of the year."

While the foregoing observations refer to water gas, the principles laid down apply equally well to coal gas, a somewhat different system of apparatus and handling being employed in its treatment. It appears certain, in the light of recent knowledge upon the subject, that tar must be removed from the gas while it is still at a high temperature, in order to avoid the active solvent action of cold tar upon the hydrocarbon vapors, which otherwise might be retained in the gas. It also appears, for economic and other reasons, that this temperature should not be lower than 100° F. Since, as stated above, the practice of condensation is somewhat different in respect to water gas and coal gas, the two will be considered separately.

Condensation of Water Gas.

The complete purification of water gas involves the removal of tar and sulphur compounds alone, there being no appreciable quantities of ammonia or cyanogen present.

Removal of Tar.

It is generally customary in a water gas plant to place a grid scrubber immediately after the wash box, and to follow this with a water cooled tubular condenser. These three pieces of apparatus remove a portion of the tar, but a considerable amount is carried forward to the relief holder to be more or less completely dropped there. The removal of the last traces of tar must be accomplished by means of some form of friction scrubber. In a paper read before the Western Gas Association (See American Gas Light Journal, July 30, 1906), E. H. Earnshaw described a modified P. & A. Condenser which accomplishes this purpose admirably. An efficiency of about 88% was obtained with the apparatus. Shavings, sawdust and various kinds of washer scrubbers have also been employed with varying degrees of success. The best practice seems to recognize fully the value of the relief holder as an efficient condenser, and combines with it some form of tar extractor in order to keep the tar out of the purifiers, and at the same time deliver the gas to the purifiers at a fairly high temperature.

Mr. Earnshaw's experiments indicate that the relief holder may take out a very large percentage of the tar,, and as the conditions here are such as to permit of a slow cooling of the gas, it would seem that this portion of the apparatus should be utilized to its fullest extent. Referring to this, Mr. Earnshaw says:

"With the experimental apparatus located at the outlet of the condensers, the amount of tar removed was quite constant at different temperatures, about 0.12 gallon per 1,000, the quantity of uncondensed tar decreasing with each reduction in temperature until, at about 90° the removal of tar was reasonably complete. With the temperature at 110° at the outlet of condensers, the gas still contained not less than 0.20 gallon of tar per 1,000; at this same temperature, at inlet to purifiers, the amount of tar was only 0.02 gallon per. 1,000, thus indicating the great value of the relief holder as a tar extractor."

Mr. Waring, in a discussion of the above paper, suggests that the condensers and scrubbers be placed at the outlet of the relief holder, instead of the inlet. This would seem to

be advisable from an economic standpoint, as it would permit of the full utilization of the condensing surface of the relief holder and deliver the gas to the tar extractor at a more uniform temperature.

With reference to the condensing water required, D. L. Summey says, in answer to Question 167, 1905 Question Box, that sufficient water should be used in the condensers and scrubbers to reduce the temperature of the gas to about 80° or 100° F. at the inlet of the purifiers. H. H. Ferris says twenty-five (25) gallons per thousand feet of gas made should be ample for this purpose.

F. S. Benson, Jr., says that thirty-three (33) gallons was the amount of water needed for scrubbing and condensing, as determined by test.

Robert Young ('06 QB 376) gives six (6) cubic feet of space for tower scrubber per 1,000 cubic feet of coal gas per twenty-four (24) hours; while F. Foreaux says two (2) cubic feet of scrubber contents for each 1,000 cubic feet of water gas per twenty-four (24) hours is ample.

Since so much depends upon the construction and handling of the apparatus, and the work which can be done in the relief holder, it is impossible to state with any great degree of accuracy, how much water is necessary for condensing purposes.

In some plants where the relief holder is large and a very efficient tar extractor in operation, the condensing water may be very much reduced. In other plants, it may be necessary to use considerably more than twenty-five (25) gallons per thousand feet, as recommended by Mr. Ferris. It appears that, under some circumstances at least, the grid scrubber at the outlet of the wash box could as well be abandoned.

Condensation of Coal Gas.

The condensation of coal gas involves the removal of tar, ammonia, cyanogen, naphthalene and a portion of the sulphur compounds.

Removal of Tar.

The temperature of the gas as it leaves the foul main varies from 125° to 160° F. Since this is much lower than the tem-

perature in the standpipe, it is obvious that a considerable quantity of tar will be dropped out in the hydraulic main. Older coal gas installations often have long foul-gas mains running around the retort house, in which a more or less gradual cooling of the gas takes place, and some tar is dropped out. The wisdom of this, however, is questionable, as the gas is cooled in contact with the tar and valuable enriching hydrocarbons are dissolved out of the gas. It often happens that the amount of tar condensed in the foul main is slight, owing to the fact that the gas is under vacuum. The gas is, however, cooled in contact with the tar, and as soon as it passes the exhauster the tar drops out, with the attendant loss of candle power.

Better practice would seem to demand a friction condenser of the P. & A. type, which would more or less completely remove the tar from the hot gas. This apparatus does not remove all the tar, however, and further condensation is necessary; hence, other condensers are provided.

The oldest form of condenser consisted of long coils of pipe exposed to the atmosphere, but the disadvantages of large first cost and difficulty in controlling the temperatures caused them to be replaced to a great extent by the more modern multitubular water cooled condensers. While these condensers are efficient, they have the disadvantage of short contact and sudden cooling of the gas, which prove detrimental to the candle power. They are, however, as before said, much used at present.

Many contributors prefer the ordinary vertical condenser to the horizontal tubular condenser, as being more efficient.

Position of Tar Extractor.

The proper location of the tar extractor involves local conditions, and opinions vary greatly as to where it should be located. It has been maintained by some that it should be placed at the outlet of the condensers. This has been objected to by others, on account of the loss in candle power, due to the scrubbing of the cooled gas. Others object to its being placed at the inlet to condensers on account of the rapid fouling of the extractor, and resultant inefficient working. The

best practice, however, seems to call for the placing of the tar extractor at such a point in the train of apparatus that the tar will be almost completely removed at a temperature of 100° to 125° F.

There appears to be little doubt that the P. & A. Condenser, when properly handled, can be made to do most efficient work. There are several factors, however, in operating the same, which can only be properly worked out when local conditions are taken into consideration.

It is evident that where a plant must be run in order to produce a tar which will cause no trouble from pitching in the mains, the P. & A. Condenser will give a different result than when worked under conditions which will produce a large amount of pitch.

In this connection, it should be observed that pitching of the mains may be prevented by the introduction of water gas tar, or the injection into the standpipes of ammoniacal liquor. The relation between hydraulic main seal and exhauster vacuum also has a direct bearing upon the question.

H. B. Harrop states:

"I find it preferable to operate the hydraulic at 1 in. seal with exhausters pulling at an even glass to not exceed ¼ in. vacuum. In operating the condensing plant, the differential pressure at the P. & A. is made greater if it is desirable to remove the sooty matter or fixed carbon in suspension in the gas, as, while about 1 in. differential pressure will generally remove all of the tar, it will take 3 in. to 3½ in. differential pressure to also remove the soot, which is accomplished by the gas passing through the foam or agitated mixture of tar and water, which rises up outside of the P. & A. drum, on account of the gas passing through below what would be the quiescent level of liquor outside the drum. As to the temperature of the P. & A., this is largely governed by the condition of the gas as to naphthalene; that is to say, the more naphthalene in the gas at the P. & A. inlet the lower would be the temperature, because decreasing the temperature of the tar facilitates the absorption of naphthalene, but on the other hand the temperature should be held as high as the naphthalene question will permit, in order to avoid as far as possible absorption

of the benzol vapor by the tar, although this is not a serious question as many gas men suppose, because the temperature at the P. & A. is generally such that if there is some benzol absorbed, still through the decrease in temperature of the gas it thereafter brings the benzol practically back to an equal per cent. of saturation. Of course, the greater the differential pressure the greater will be the effect of the tar in absorbing naphthalene (and benzol)."

A paper read by James S. McIlhenney, at the 33rd Annual Meeting of the American Gas Light Association, in Washington, entitled, "Some Thoughts on Condensation," discusses the subject of condensation at length, and contains some valuable observations.

C. O. G. Miller ('04 QB. 62), states that in California, where heavy oil is used in water gas manufacture, it has been found satisfactory to use two (2) scrubbers, instead of a condenser and scrubber.

Summing up briefly the subject of the removal of tar from gas, the following points should be borne in mind:

(1) The tar should be removed at as high a temperature as possible, as numerous experiments have shown that valuable illuminants, which might otherwise be retained in the gas, are absorbed by cold tar.

(2) It is recognized that even when the gas is scrubbed at a high temperature, there is still an appreciable loss of these valuable illuminants; therefore, subsequent cooling of the gas should be gradual, and the tar should be removed from contact with it as soon as possible.

The Bredel system of condensation aims at reducing this loss by passing the gas through ammoniacal liquor in Kloenne washers, its object being to prevent contact with the gas and liquid products of condensation.

In answer to '05 QB 225, several contributors advocate installing shavings scrubbers to remove the last traces of tar; while others prefer to use an ammonia washer, which does not require cleaning like a shavings scrubber.

Removal of Ammonia.

The necessity for cooling the coal gas, aside from the re-

moval of tar, is occasioned by the fact that ammonia can only be completely scrubbed from the gas at a comparatively low temperature, a temperature of 70° to 80° F. being best suited for this purpose. It is customary, in the removal of ammonia, to employ washers in which weak ammoniacal liquor from the hydraulic main is brought into intimate contact with the gas. This piece of apparatus is generally called a "reaction" scrubber. In this scrubber a large portion of the ammonia is removed by direct chemical combinations of the basic ammonia with sulphuretted hydrogen and carbonic acid and other acid radicals contained in the gas.

"In the reaction scrubber a rise of temperature is noted, caused by several exothermic chemical reactions plus conversion of mechanical work into heat." R. B. Brown, '05 QB 211.

The last traces of ammonia must be removed by means of a second apparatus, or a portion of the same apparatus employing fresh water. In the old works, tower scrubbers, filled with grids or coke, were employed for the removal of ammonia. Although they have high efficiency and often are considered preferable, a great many mechanical washers are now in use. These consist of large vessels through which the gas passes, having a number of chambers in which revolving brushes, exposing large surfaces, are continually wetted with ammoniacal liquor. They have the great advantage of compactness, and produce a greater concentration of liquor.

In the 1903 Question Box, Question 72, the following extract, by H. B. Petley, bears upon the subject:

"The advantages of the so-called 'high efficiency' scrubbers, such as the brush, are that the crude gas containing ammonia is brought very intimately in contact with the water, and as comparatively little water is thus required, a strong crude liquor is obtained for treatment in an ammonia concentrator."

That this opinion is not universally held is evidenced by the following, also from the 1903 Question Box:

"I fail to see any great advantage in the so-called 'high efficiency' scrubbers. Good distribution in tower scrubbers makes them very efficient, with a small expenditure of power and a low investment cost. Assuming a yield of ammonia of

five (5) pounds per ton of coal carbonized, and assuming a yield of 150 pounds of water per ton of coal carbonized, the maximum average strength the liquor could have would be 3 1/3 per cent., corresponding to about twelve (12) ounces liquor. The yield of water generally exceeds 150 pounds per ton of coal carbonized, and the yield of ammonia is generally less than five (5) pounds. If the gas is thoroughly scrubbed with ammoniacal liquor, by repumping it can be brought to ten (10) ounces strength under favorable conditions. The excess ammonia must be taken up with clean water. I see no object in working some of the ammonia up to sixty (60) ounces strength, while the balance of it is allowed to remain with a strength of about four (4) ounces. The average strength is not much greater than it would be without a high efficiency scrubber.

"The use of such a scrubber will allow the use of a lesser amount of clear water, permitting a slight saving in the quantity of steam required to distill off the ammonia, and also permitting the use of a slightly less amount of fresh water, which would in theory indicate a higher candle power for the gas, but with effective tower scrubbing the use of fresh water is already so small that an increase of 100 per cent. would not make a noticeable difference in the candle power of the gas."

H. L. Doherty expresses the opinion that a tower scrubber is as efficient as the so-called "high efficiency" scrubbers, and requires less power and is less expensive to operate.

In any good form of scrubber the amount of ammonia escaping should not be over one (1) or two (2) grains per hundred feet of gas; in other words, the gas should be practically free from ammonia, and this should be accomplished with the production of an ammoniacal liquor not weaker than two (2) per cent., NH_3 (an eight ounce liquor). The completeness of the removal of the ammonia can be roughly indicated by means of a strip of red litmus or tumeric paper.

Quantitatively, the amount of ammonia may be determined by permitting a stream of the gas to bubble slowly through a series of wash bottles, containing a measured quantity of standardized sulphuric or hydrochloric acid. The gas is then passed through an experimental meter. The quantity of gas being known, and the strength of the acid having been de-

termined in terms of NH_3, the loss of NH_3 is easily ascertained by finding the quantity of standard acid which has been neutralized by the ammonia in the measured quantity of gas. This is done by washing the contents of the flasks into a beaker and titrating back to neutrality with a standard solution of caustic soda, using methyl orange solution as an indicator. Care should be used to prevent small splashes of liquor entering the absorbing flasks. This may be done by the use of a dry flask at the inlet to the train of absorbers.

The amount of ammonia in the gas may also be readily determined by using the C. C. Tutwiler H_2S apparatus, and using instead of the Standard Iodine Solution a standard solution of sulphuric acid, with methyl orange as an indicator.

With reference to the amount of water which must be used in a tower scrubber to effect the complete removal of the ammonia, hard and fast rules cannot be laid down, as the efficiency of the scrubber of course regulates this amount.

Where a tower scrubber is clean and of sufficient capacity, and the amount of ammonia entering is not over forty (40) to fifty (50) grains per hundred, one (1) gallon of water per thousand feet should insure the almost complete removal of the ammonia from the gas, and the production of a liquor containing 0.5% to 0.8% of ammonia.

Many works, however, repump and reuse their liquor in scrubbing, on account of the chemical affinity of ammonia for CO_2, and its slightly weaker attraction for H_2S.

A table given in Lunge's "Coal Tar and Ammonia," shows what a great help to the purifiers and to the illuminating power of the gas such a course may prove.

J. A. Schaefer has also prepared a table, which is printed in full, '04 QB 40, which also shows, in great detail, the amount of CO_2 and H_2S absorbed by the ammoniacal liquor at different temperatures.

For economic reasons there has never been a successful sulphur recovery process used in American gas works products, although in England the "Claus" processes for the recovery of sulphur, in connection with the manufacture of ammonium sulphate, is in more or less general use.

The distribution of the sulphur content of a gas coal on

distillation differs, of course, with each coal. H. B. Harrop has worked out a case, as follows:

Coal — 2,000 pounds @ 1.09% Sulphur	=	21.80 lb.
Coke— 1,400 " @ 0.78% "	=	10.92 lb.
Crude gas at stand pipes		10.81 "
Unaccounted for		0.07 "
		21.80 lb
Crude gas at standpipes		10.81 "
Divided as follows:		
Tar — 131 pounds @ 0.76%	=	1.00 lb.
Ammoniacal liquor @ 0.20%	=	0.85 "
In purifying material		8.00 "
In finished gas		0.44 "
Unaccounted for		0.52 "
		10.81 lb.

Inquiry '05 QB 368 refers to what are the evil effects of ammonia left in the gas, and is answered by many. The principal reasons given are that it attacks all brass work, injuring fixtures, meters and fittings, and that, being a valuable by-product, it should be recovered by the gas company.

Removal of Naphthalene.

On account of the high heats maintained in coal gas practice, and the nature of the raw material employed, naphthalene will be formed in more or less large quantities. Often the solvent action of the tar is sufficient to keep it in solution, and thus prevent deposition of naphthalene in the distribution system. At times, however, under certain working conditions, naphthalene may cause trouble. Various systems of removal and prevention have been tried.

The naphthalene may be removed ('05 QB 234) by exposing the take-off pipe from the hydraulic main to the condenser, so that the gas may be gradually cooled; but this practice involves the objection stated before, in that the removal of the tar from the gas should be affected at as high a temperature as possible, to preserve some valuable illuminants.

The most successful method, however, involves the washing of the gas with an anthracene or heavy tar oil, containing about 3% of benzol, to counteract the solvent effect of the heavy oil on the illuminants in the gas.

The oil may be employed in any form of washer, and abroad one or two compartments of the cyanogen washer are used; while in many instances in England the removal of naphthalene is accomplished by passing the gas through a Livesey Washer, containing anthracene oil, especially prepared for the purpose. (J. B. Klumpp.)

Water gas tar, which is comparatively free from naphthalene, has been employed in this country with good effect. The tar, after it becomes heavily charged, is either mixed with the coal tar, or sold separately at a price which makes the cost of scrubbing naphthalene from the gas very small.

H. E. Mann ('05 QB 241) states he found one (1) gallon of water gas tar sufficient to remove the naphthalene from 25,000 cubic feet of coal gas; while other authorities state the efficiency of the tar depends upon its original content of naphthalene, and in some cases one (1) gallon will only remove the naphthalene from 5,000 cubic feet of coal gas.

The location of the naphthalene scrubber should be at a point where the gas is still warm. A temperature of 100° to 110° F. is probably best suited for the purpose. At this temperature the solvent action of the oil will not be counteracted to any great extent by the relatively high vapor tension of the naphthalene, and there will also be a comparatively small loss of illuminants.

In '05 QB 165, and '03 QB 41, 54 and 66, are given many replies as to the removal of naphthalene that are too numerous to repeat at this point, but some schemes are detailed later under "General Works Operation."

Jno. P. Leather ('05 QB 370) says, in answer to inquiry, that the critical temperature of a substance is that temperature at which the distinction between the liquid and gaseous form of the substance vanishes, and that critical temperature and pressure have no bearing in the solidification of naphthalene in the works or distribution system.

Removal of Cyanogen.

Most of the cyanogen occurring in the gas will be ultimately found in the ammoniacal liquor and spent oxide, a small portion, however, escapes the purifiers and passes on with the gas. In this country very little has been done towards the recovery and sale of cyanogen, though abroad it is usually considered most desirable to do so, both for the revenue derived from the residual and on account of the corrosive effect of the cyanogen on the meter drums and holders, and the tying up of a certain amount of iron in the purifiers as insoluble iron cyanide compounds.

There are many methods for removing cyanogen from the gas. Reference should be had to recent publications on the subject of cyanogen recovery. Among the best of them are, "Die Technologie der Cyanverbindungen," by Bertelsmann, and "Cyanide Industry," by Robine and Lenglen.

The Bueb Process seems to have met with most favor. In this system a mechanical scrubber, similar to a Standard Washer, is employed, The gas is made to pass through a concentrated solution of iron sulphate, which removes the cyanogen in the form of insoluble cyanide compounds, consisting chiefly of Ferrous Ammonium Ferrocyanide $(NH_4)_2$ Fe, $FeCy_6$. At the same time about 25% to 30% of the total ammonia is removed from the gas and occurs mixed with the cyanogen sludge; in other words, the insoluble cyanogen compounds are suspended in a weak liquor of 6% to 7% strength. The sludge is further worked up by distilling off the ammonia and by means of a filter-press converting the residue into a solid cake, the liquor running from the press being a weak solution of ammonium sulphate, which is mixed with the works' liquor. The amount of cyanogen recovered varies, dependent upon the heat of carbonization and other conditions, as from one (1) to one and one-half (1½) pounds of cyanogen per net ton of coal carbonized.

In '04 QB 32, several contributors state that a small portion of CS_2 is removed with the ammoniacal liquor in the scrubber.

H. B. Harrop says:

"A strong ammoniacal liquor, particularly if the temperature is somewhat high, converts some CS_2 to ammonium sulphocyanide, NH_4CNS, and ammonium sulphide. Several other reactions of this nature are possible, and probably aid in removing CS_2 from the gas. The most likely of these is: $(NH_4)_2 S + CS_2 = (NH_4)_2 CS_3$.

On account of its extremely high vapor tension, no appreciable effect can be had upon the CS_2 content of gas from a high sulphur coal, due to the high total sulphur in the gas and the small percentage removed. It is a subject for a lime or aniline-oxide of iron purifier."

A statement made by Bredel on this point, in connection with Kansas High Sulphur Coals, is to be found in Proceedings O. G. L. A., 1904.

---

4. PURIFICATION.

1. Various Principles Utilized in Purification.
2. The Chemistry of Purification.
3. The Manufacture of Iron Sponge.
4. Substitutes for Shavings.
5. Operation of Boxes and Handling of Oxide.
6. Revivification in Situ.
7. The Proper Number of Boxes in a Purifying Set.
8. Sulphur Permissible.
9. The Removal of CS_2.
10. The Cost of Purification.
11. Purifying Houses.

1. Various Principles Utilized in Purification.

Those constituents of crude carburetted water gas and coal gas, which are harmful to it, either by reason of their presence having a deleterious effect on the illuminating power, or by reason of the products of their combustion being noxious, are conveniently classed together as impurities, and the removal of these impurities is generally termed purification.

Using this term broadly, it will be seen that purification

really commences in the standpipe and hydraulic main, or washer, where some of the tars and a portion of the ammonia are at once removed. The term, however, as generally used in this country, considers the removal of sulphur impurities that pass by the condensing and scrubbing apparatus and are finally absorbed in, so-called, purifying boxes, and this chapter is meant to cover the methods of purification at this point.

These purifiers are usually employed for the removal of sulphuretted hydrogen, but carbonic acid and carbon bisulphide are also removed, and any small traces of ammonia and tar, and a portion of the cyanogen leaving the scrubbers may also be here abstracted from the gas.

The oldest purifying process is that known as the "Wet Lime Process." In its use a series of iron vats partly filled with milk of lime were employed. The bubbling of the gas through the milk of lime was usually sufficient to keep the lime in suspension, although mechanical stirrers were sometimes employed. The objections to this process were many: Its operation incurred a high labor cost and the sludge, called "Blue Billy," was quite objectionable. This sludge, however, had some uses around the works, such as for luting retort lids, etc.

The "Dry Lime" process, which succeeded the wet or milk of lime process, was invented by Phillips, and after being perfected by Mallam, became the standard process for gas purification, and remained so for many years.

The dry lime process removes sulphuretted hydrogen and carbonic acid, calcium sulphide and calcium carbonate being formed. The calcium sulphide, or sulphide of lime, as it is called, will then remove the carbon bisulphide.

The "Iron Sponge" or "Iron Oxide" process, is the one most generally used at present for the removal of sulphuretted hydrogen. The gas coals used in the United States are generally sufficiently low in sulphur to insure that the gas resulting from the distillation does not contain an excessive amount of carbon bisulphide; hence the iron oxide process is suitable and is in almost universal use.

"Weldon mud" (manganese dioxide) has been used extensively abroad for the same purpose, and wet purification by

ammonia has also been employed, but with doubtful success. Since these processes are practically unknown in the United States, they will not be touched upon in this review. The dry lime process is also very rarely used in this country, but the chemistry of it will be reviewed on account of its historical importance.

2. Chemistry of Purification.

Dry Lime Purification:

Lime, carefully slaked, is loaded into purifiers, similar to those used for purification with oxide. It is placed in the purifiers in such a condition as to moisture that it agglomerates readily and forms a soft pasty mass when pressed together. "The gas entering the lime purifier contains both sulphuretted hydrogen and carbonic acid. The strongly basic nature of the lime causes it to combine with these gases, and so long as it is not nearly neutralized by them, both are removed from the gas. When, however, the lime has become nearly saturated, the greater stability of calcium carbonate compared with calcium sulphide is shown by the gradual decomposition of the latter salt by the carbonic acid coming in with the gas. Sulphuretted hydrogen is given off on the decomposition, and passes forward with the gas to be removed from it at a later stage of purification. The superior affinity of lime for carbonic acid thus enables the contents of a purifier to be converted entirely to carbonate, although sulphuretted hydrogen is passing in with the gas. As the lime becomes saturated with the carbonic acid, that gas begins to pass on unabsorbed, and the course of the fouling of a lime purifier may be traced by testing the gas issuing from cocks placed above each tier in one side of the purifier." (Butterfield Gas Manufacture.) The calcium sulphide formed absorbs a portion of the carbon bisulphide in the gas, but this is decomposed by carbonic acid; hence it is necessary when it is desired to remove the carbon bisulphide to remove all carbonic acid in previous vessels.

"The precise composition of the active material in sulphide purifiers has long formed a subject of debate for gas chemists. It might reasonably be supposed to be calcium sulphide, more

or less moist, from the water used in slaking the lime. It has been shown experimentally that damp calcium sulphide is an absorbent of carbon bisulphide, but the absorption is not a complete one, and it seems possible that it may really be due to a decomposition product of calcium sulphide in the presence of water. The published work on the subject does not actually enable us to refute those who contend that damp calcium sulphide is the active material in sulphide purifiers, but it may be positively stated that the reaction which takes place in them is not represented by the equation, $CaS + CS_2 = CaCS_3$, though this is still often used in writings on gas manufacture to express the action of sulphided lime and carbon-bisulphide. No such product, as a simple pure calcium thiocarbonate is the result of the reaction that occurs in the purification of gas."

The active materials in sulphide purifiers have been considered by Lewis T. Wright, among others, to be calcium hydrosulphide, CaS, H_2S, or $Ca(SH)_2$. On analogy this seems extremely probable, as it is the sulphur compound of calcium corresponding to calcium hydrate, $Ca(OH)_2$, and might, therefore, reasonably be expected to have an affinity for carbon disulphide, as the hydrate has for carbon dioxide. But, according to V. H. Veley, calcium hydrosulphide is inactive towards carbon disulphide. He formed the salt by passing sulphuretted hydrogen into the water containing lime in suspension, and found it to crystalize in acicular needles. It is, however, extremely unstable, and in the presence of air or even inert gases, passes into the hydrated sulphide, thus,

$$Ca(SH)_2 + H_2O = Ca(OH)(SH) + H_2S$$

with evolution of heat. This hydrated sulphide is precipitated when carbon disulphide is passed into a solution of calcium hydrosulphide, sulphuretted hydrogen being evolved, and the absorption of carbon disulphide is said not to commence until such precipitation has taken place. The carbon disulphide, on absorption, throws down crystals of a basic calcium thiocarbonate, which deepen in color from yellow to red, and dissolve to form a red liquid, which, on evaporation, yields a basic thiocarbonate corresponding to the formula $Ca(OH)_2\ CaCS_3$, $7H_2O$. Such a red liquid drains down from the sulphide purifiers during their activity, and is removed by siphons.

From these data and the fact that the absorption of carbon disulphide is accompanied by evolution of sulphuretted hydrogen, V. H. Veley considers the reactions which take place in the sulphide purifiers may probably be represented by the equations:

$$2CaSHOH + CS_2 = Ca(OH)_2CaCS_3 + H_2S$$

$$3CaOHSH + CS_2 + H_2O = CaCS_3 2Ca(OH)_2 + 2H_2S$$

For the reasons given above, it must not be assumed that these are the reactions that actually occur, and further investigation is still urgently needed. Veley's conclusions have not actually been disproved, though they have been before the gas world for a considerable time, and his work on the subject does not pretend to be exhaustive. It must be granted that he has made out an excellent case on behalf of calcium hydroxyhydrosulphide (Ca, OH, SH), as the active material of sulphide purifiers, and until more conclusive evidence than has at present been brought forward is forthcoming as to the inaccuracy of his deductions, they must be taken as legitimate. It is of little use to attempt a research on the action in sulphide purifiers with impure materials and a gas of uncertain composition, and many would-be investigators of the matter have failed through carelessness in this respect. Chemical reactions must be studied, in the first instance, apart from all disturbing influences; when the actions of gases of definite and tolerably simple composition on pure materials have been sufficiently studied, we can pass to the study of more complicated gaseous mixtures, and make due allowance for the presence of disturbing elements. The haphazard and unscientific methods in which many so-called investigations on gas purification have been carried out, are sufficient ground for excluding mention of them from a general review of the subject. Veley's researches, suggested and more or less inspired by A. Vernon Harcourt, form a pointed exception to the general slovenliness of the work on sulphur purification." (Butterfield's Gas Manufacture.)

Theoretically one pound of CaO will absorb 0.6071 pounds of H_2S from a gas; or a pound of CaO will take up 0.785 pounds of CO_2. In practice it is not usual to obtain over 88 per cent. efficiency from commercial lime.

"Iron Oxide" Purification:

The chemical reactions entering into the removal of sulphuretted hydrogen by oxide of iron have never been definitely determined. The most probable reaction, however, is

$$Fe_2O_3H_2O + 3H_2S = Fe_2S_3 + 4H_2O$$

But besides this reaction the following also occurs:

$Fe_2O_3H_2O + 3H_2S = 2FeS + S + 4H_2O$, and possibly,

$Fe_2O_3, 3H_2O + 3H_2S = 2FeS + S + 6H_2O$.

From the above equation it will be seen that it is necessary to use hydrated iron oxide, as anhydrous iron oxide, (Fe_2O_3), will not combine with hydrogen sulphide.

The chemistry of the revivification of ferric oxide is also little understood. The following equations are supposed, however, to represent the reaction:

$$2Fe_2S_3 + 3O_2 = 2Fe_2O_3 + 3S_2$$
$$12FeS + 9O_2 = 6Fe_2O_3 + 6S_2$$
$$4FeS + 2S + 3O_2 + 6H_2O = 2Fe_2O_3, 3H_2O + 6S.$$

The chemical reaction of purification is a rather slow one, and but little heat is generated. The reactions are, therefore, promoted by keeping the gas warm, but this temperature must not be high enough to drive out the water of hydration. Between 85° to 100° F. is about the correct temperature to maintain, some authorities recommending the higher temperature. It should also be remembered that tar or oil will prevent chemical reaction from taking place; hence, these should be kept out of the purifiers.

The presence of oxygen in the gas causes a certain amount of revivification "in situ." The amount of oxygen is sometimes increased in order to further promote this revivification in the boxes. This, however, will be considered at length further on.

When it is remembered that the heat generated in revivification is almost ten times that of the purifying reaction, the need of occasional watering of oxide is easily seen to be caused by the loss of this water of hydration while heated by the revivifying reaction.

Purified gas if passed through fouled oxide will not absorb

sulphur compound from it. In case oxygen is still present in the gas (and it is almost impossible that it should not be) the purified gas will revivify the fouled oxide. It is upon this action that B. F. Chollar's process of gas purification depends. An explanation of this process will be found in A. G. A. Proceedings, Vol. XXI, Page 181.

Owing to a very faint trace of H_2S passing through oxide purification even of the most perfect quality, a continuous H_2S test paper will show a yellowish to brownish color.

The arguments in favor of the use or introduction into the gas of oxygen for purifying purposes are entirely based on the increased capacity of the boxes.

The amount put in should be measured and the benefit to be derived by its use—given good, active purifying material—can be calculated. By the foregoing given chemical equations of purification and revivification, it is seen that one volume of oxygen introduced in this way will enter into the removal of two volumes of sulphuretted hydrogen. If, then, the amount of H_2S in the gas is known, the value of the oxygen is easily figured. As each gas-making material will make a different percentage of H_2S, the value of oxygen cannot be stated, in advance.

H. G. Colman (O. QB '05) points out the fact that an "excess of oxygen tends to raise the temperature of the purifying mass to such an extent that it becomes very hard, thus throwing back pressure and even fusing the sulphur in it."

3. The Manufacture of Iron Oxide.

We find a great difference in the purifying efficiency of oxides produced under slightly different conditions or treatments, where the material is made by oxidation of iron turnings or borings. It is now the more general practice to oxidize the iron after mixing with the shavings, or other carrier. This practice has several advantages. The oxide adheres closely to the shavings and spreads more easily over the entire surface of the shavings. The oxidizing mass is more easily

kept cool. The water necessary for oxidation and hydration is held in contact with the iron longer. The most important objection to this practice is that the shavings themselves deteriorate or rot to some extent.

In either practice it is usual to hasten the oxidation of the iron by treating the mass with solutions of copperas ($FeSO_47H_2O$), salt (NaCl), or ammoniacal liquor, and sometimes milk of lime. Any or all of these substances aid the process, but there is perhaps least objection to the use of salt.

In the recent research work reported by E. H. Earnshaw to the American Gas Light Association Proceedings, Vol. XXI, special importance is laid upon the keeping of the oxidizing mass thoroughly wet and cool. These conditions insure a highly active sponge.

Relative to the quantity of iron to be used per bushel of shavings, it must be said that very few makers of oxide use less than fifteen pounds of iron per bushel (and the general practice is about twenty pounds), but this is a matter that should vary with the back pressure allowable in the plant, and also the general plan of purification and revivification which is to be followed. If the oxide is revivified in place, less iron and more open oxide is more advantageous, and twenty pounds to the bushel would be ample. On the other hand, when a heavier duty is demanded of the box and more back pressure is allowable, a much larger proportion of iron would be advisable; forty to fifty pounds of iron to the bushel of shavings is not uncommon under these circumstances.

An extensive and valuable contribution of opinion on this subject is found in the Question Box ('03 QB 10 and 14, Elbert, Steenbergen, Perkins, Mason, Petley, Peoria Gas & Electric Co., Freeport Gas Light & Coke Co., Doherty, Thwing, Malone, Fort Madison Gas Light Co., Thomas D. Miller). The above digest, contains most of the information embodied, but the reader is referred to the original publication for details and variations.

The columns below give a fair idea of the history of a bed of oxide, made by using some copperas:

As first mixed.	When ready for use.	Soon after gas turned in.	After repeated use of revivification.
Iron.	$Fe_2O_3XH_2O$	$FeO.XH_2O$	
$FeSO_47H_2O$	$CaSO_42H_2O$	$Fe_2O_3XH_2O$	$FeO.XH_2O$
$Ca(OH)_2$	Wood.	FeS	$Fe_2O_3XH_2O$
Wood.	Water.	Fe_2S_3	FeS_2
Water.		S	S
		$CaSO_42H_2O$	$CaSO_42H_2O$
		Wood.	Wood.
		Water.	Water.
		$Fe(CN)_2$	$Fe_7(CN)_{15}$
		$Fe_7(CN)_{18}$	NH_4CNS
		NH_4CNS	Naphthalene, tarry matter, etc.
		CS_2 benzene, etc.	
		Naphthalene, tarry matter, etc.	

Of course, these lists must not be taken as hard and fast. A portion of the iron persists in the metallic state for some time; a trace of the ferrous oxide from the copperas remains when the box is finally ready for use; in the process of revivification all of the FeS and Fe_2S_3 is never entirely oxidized, and so on.

4. Substitute for Shavings.

In looking for a suitable substitute for shavings or sawdust in purifying material, small success is reported. The most promising materials from a practical standpoint are unfortunately not sufficiently abundant. Malone ('03 QB 11) has the following to say in favor of ground cork and ground corncobs:

"Ground cork makes an excellent substitute for shavings or sawdust in the preparation of purifying material, and is superior in many respects to either. It is made from waste cork and can be procured from any of the cork factories. It

should be ground to about the size of a grain of corn to obtain the best results.

"Cork does not become saturated or soggy, 'cake' in the box, or become pulverized like sawdust or shavings. Purifying material made from ground cork, owing to its spongy nature, does not become as compressed as other materials, and only throws one-third the back pressure of other material ordinarily used. Fifty per cent. more oxide can be mixed with ground cork than with a given volume of the ordinary sawdust and shavings mixture, hence, you increase the capacity of your box one-half, or purify 50 per cent. more gas with a given volume of the cork material. The initial cost of the cork is greater than that of the sawdust or shavings, but this is more than offset by its other merits.

"Ground corncobs, it is thought, will also make a good substitute for use in purifying material. Experiments that are being made with ground corncobs would indicate that they possess many, if not all, of the merits of ground cork. The ground corncobs cost about 50 per cent. less than the ground cork, which is an important item.

"The following tabulation gives the weight of one bushel (2,150 cubic inches) of different purifying materials:

Pine shavings	5.25 lbs.
Ground cork	6.00 lbs.
Pine sawdust	12.75 lbs.
Ground corncobs	15.00 lbs.
Iron oxide	112.00 lbs."

Other suggestions (same reference) are spent tan bark or clean gravel (Elbert) and hay or straw cut fine (Burrows). Thwing has this to say: "I have tried but one substitute, which was very fine screened coke, about the size of a pea. This worked fairly well for a few months and then 'went to the bad' with wonderful and annoying suddenness. A large part of the oxide had undoubtedly entered the pores of the coke and the gas could not come in contact with it. This experience has convinced me that a proper carrier of the oxide must not only be able to form a porous mass, but must

be permeable to the gas itself, the same as shavings or planer chips."

5. Operation of Boxes and Handling of Oxide.

What is the best method for determining how long to keep a fouled box of oxide of iron in service? This is a question which must be considered at each works separately and the answer will depend upon the number of purifiers and the speed and quality (as to H_2S) of the gas passing through them.

The practical answer must in any case be that the foul box in the series shall be taken out of action and revivified in safe season, so that in a series of four or six boxes, the H_2S shall never show past the middle of the last box (the better practice is to keep H_2S entirely out of the last box). In purifying systems of two or three boxes the simple test with lead acetate paper, which can be used in the above mentioned case, will no longer solve the problem. Here the experience and records of the plant should be coupled with a chemical test such as that given by B. F. Chollar in the following paragraph from "All American Gas Wrinkles," page 98, Western Gas Assoc., 1903:

"It frequently happens that both the inlet and outlet of a purifying bed will show an apparently equally foul test with lead paper, while the bed may yet be doing work. The following shows how this condition may be ascertained: A pipe and stop-cock leading from each side of the bed, rubber tubes with glass nozzles of equal size attached, and a weak solution of permanganate of potash are all that are required. Put equal quantities of equal strength of the solution in the test tubes, insert the glass tubes and turn on the gas in both at the same time. Foul gas will make the solution clear almost immediately. If the bed is doing work, the inlet side will clear up quicker than the outlet side. Two or three grains, or perhaps less, of permanganate to the quart of clean water is sufficient. Keep the solution in a well-stoppered bottle, and do not make up too much at a time."

The combination of such a test with past experience should show the point at which it becomes necessary and economical

to revivify the foul box. "My opinion is, judging from the few experiments that we have been able to make, that when the outlet of a box clears up in about four to five times the length of time it requires the inlet to clear up by this method, it is time to change the box, as it would be taking out less than 30 per cent. of the sulphur in the gas." Luther ('04 QB 30) and Schaefer ('04 QB 37) recommend the Tutweiler apparatus as adopted by The U. G. I. Company for the determination of the quantity of H_2S in the gas. A short description of this apparatus will be found below. As long as the first oxide box does not show excessive back pressure, it should not be changed, unless the second box becomes foul and the admission of air fails to cause the removal of the H_2S in the second box.

The Tutweiler apparatus employed consists of a burette provided at the top and bottom with a 3-way cock, communicating at the top through one of the outlets with a 10 c. c. glass stoppered cylinder graduated into tenths c. c. There are only two graduations on the burette proper, one at the 100 c. c. mark, the other between the 100 c. c. mark and bottom cock, dividing the remaining space into two divisions of about 5 c. c. and 10 c. c. respectively. A levelling bulb is attached to the lower cock and the burette mounted on a suitable stand.

The graduated cylinder is filled with standard iodine solution of such a strength that 1 c. c. will neutralize a quantity of sulphuretted hydrogen equivalent to 100 grains in 100 cubic feet of gas, based on a sample of 100 c. c. The method of operating is as follows: Measure accurately 100 c. c. of gas in the burette and drop in the standard iodine solution until the sulphuretted hydrogen is neutralized, as shown by a change in the color of the starch solution in the burette. The starch is employed as an indicator and even a slight excess of iodine will produce a blue color. The quantity of iodine solution used, as shown on the graduated cylinder, gives directly the quantity of H_2S in grains per hundred cubic feet of gas.

The amount of sulphuretted hydrogen in crude coal gas made from the best gas coals, such as Youghioghenny and Westmoreland coal, varies from 400 to 600 grains sulphuretted

hydrogen per 100 cu. ft., while the gas made from coals containing sulphur in greater quantities might contain as high as 900 to 1,000 grains of sulphuretted hydrogen per 100 cu. ft. As regards the amount of sulphuretted hydrogen removed by the various boxes, in a 4-box series, it has been found, and is probably the general condition, that the first box, however fouled, is removing from 50% to 80% of the total H_2S in the gas. The second box, probably, is doing about three-quarters of the remainder, while the last two boxes will remove the balance. Thus it will be seen that the first box, or foulest box, when changed, is doing nearly 50% of the total work of the series, which is one reason why a 6-box series might be worked to much greater advantage by allowing the first box to remain in action for a greater length of time.

"The limit of the working of an iron oxide bed has heretofore been based on the number and capacity of boxes in series, and not by the fact that at any time the said bed had ceased to do useful work. It has been definitely determined that the foul box in a four-box series is doing a great deal of useful work at the time that it has to be shut off, because the point at which the gas shows clean approaches dangerously near to the outlet of the last box. The United Gas Improvement Company at Philadelphia is now using a six-box series and, I am told, finds the same conditions obtain there, though of course to a less degree. Therefore it may be said that under existing practice an iron oxide bed does not cease to do useful work." (R. B. Brown, '04 QB 37.)

The foregoing all refers to the indications for subjecting a box to change or revivifying treatment. In regard to the point at which the contents of a box is to be discarded, the following notes are given:

"A box of iron oxide containing 50 per cent. of free sulphur is considered unfit for use. The amount of sulphur can be determined by taking a small sample of iron oxide from a batch you have decided to test, and by passing liquid carbon bisulphide through this the sulphur will be carried over to a vessel provided for its return and there deposited. After this has been dried the amount of sulphur is weighed and you have the per cent. of sulphur the iron oxide contains." (Coles, '04

QB 37.) It is proper to add that the maximum sulphur allowable will depend on conditions; if the purifying system is overworked it may not be possible to reach more than 30 per cent. or 35 per cent. at most, before a new and active batch of material must be substituted in the house for the sluggish unit, but during slack periods, when little gas is being made, or if a particularly low sulphur coal has been secured, boxes may be, and frequently are, in current American practice, worked up to 60 per cent. or higher.

In place of depending on free sulphur content, the common usage is to be guided by the useful—profitable—work the oxide is doing, judging this chiefly by the way it revives (Mann, Osbourne '04 QB 30), and Chollar (same reference) states the case pointedly as follows: "Oxide at best is uncertain material. It is variable, capricious, unsteady and inconstant. The proportion of free sulphur mingled with the mass is not a true criterion of its usefulness, and in fact I do not know what is. The best way I know of is—when it won't work any more, and you can't revive it, throw it away."

It is quite practicable, and is to be recommended, to make frequent quantitative tests of the amount of work each box is doing while in use, by means of any of the apparatus above mentioned, and keep an orderly record showing at a glance the "expectancy" of each lot of material at any time.

Relative to the amount of sulphur which may be expected in unpurified gas, in the form of H_2S, A. C. Pease gives 345 grains per 100 cu. ft. in Pelham, N. Y., coal gas, and 80 to 200 grains in their water gas.

An anonymous authority gives the following table:

	Grains per 100 cu. ft.
Penna. Gas Coal	400 to 650
McAllister, I. T.	380 to 420
Gaston Gas Coal	640 to 680
Montana	700 to 765
Westmoreland	900 to 1000
Cherokee, I. T.	2450 to 3010

"Oxide, once saturated with tar or tar oils, will improve by long exposure, but will never recover the activity it would

have had in the absence of this tarry matter, and unless it is washed with a solvent to remove all this tar, it will not recover." (Thos. D. Miller, QB '06.)

Oxide deteriorates very rapidly if used on gas from which all of the oily vapors have not been removed. To prevent such losses the following remedies are suggested:

Passing the gas through a shavings scrubber.

Slow speed in the condensing and scrubbing apparatus.

Use of an ammonia washer on the gas.

An up-to-date P. & A. Tar Extractor.

In the case of water gas, employ a good sized relief holder.

To revivify oxide after removal from the box, the usual method, when it is fresh and rich in hydrated ferric oxide, is to spread it, as quickly as possible, in a layer about two feet thick. Old oxide may be allowed to remain in a heap, as moderate warmth assists the revivification, but it should not be allowed to get sufficiently hot as to drive out the water of hydration. A temperature higher than 180° to 190° F. should be avoided. The amount of turning must be regulated by experience, according to the values of the material, but the general tendency is towards too little labor, rather than too much.

The surface of any one fragment may show a good brown color, but on breaking it a black core may be observed, so it is not safe to conclude that directly the color turns the material is again fit for use. In general the turning should be every second day.

Before being used again it might well be broken up, screened, if necessary, and thoroughly dampened with water. Water should not be applied before revivification is fairly well advanced. N. H. Humphreys, Black, H. R. Whitehead (QB '06.)

A box of purifying material which has become dry and hard may be temporarily and partially relieved by turning a small quantity of live steam into it. It is only temporary relief, however, for there are always some portions of the material

through which the steam can easily find passage and not affect the harder portions to an appreciable extent.

6. Revivification in Situ.

When a box is fouled and cut off from the gas supply, the oxide is sometimes revivified in place by pulling or pushing air through it, but in all cases, a most careful watch must be kept of the temperature of the oxide to prevent over-heating. If the oxide is not uniformly fouled, the reaction will probably be the greatest at the foulest point. The following principles should be observed in revivifying oxide in situ:

The rate at which air is drawn in or pushed through the box should be sufficiently great to promote rapid oxidation and at the same time carry off the excessive heat of the reaction. If the rate is too slow, the temperature may rise and fire the oxide; if rate is too fast, the same result may take place on account of too rapid oxidation; hence, it is of the greatest importance that this process be carried on with great care. This is especially true of new oxide or oxide that has been used but once or twice. Steam introduced with the air, helps to keep the temperature under control and tends to keep the oxide in a more or less moist state.

In filling a box, care should be taken to tamp the oxide around the edges, so as to avoid leaving any interstices or openings at these edges, which are apt to occur, due to various causes such as shrinking during revivification, and spaces caused by the irregularities in the iron supports for the trays. It should be borne in mind that all chemical reactions are generally accelerated with an increase in temperature, and with this in view, it can be seen that the process of revivification should take place at a comparatively high temperature for the best results.

In using Texas oil a large content of sulphur as H_2S and also organic sulphur is to be expected. Thomas D. Miller has the following to say on the removal of these compounds: "The only way I have found for removing the sulphur from gas made from Texas crude oil is to have ample purifying capacity, and, of course, better results are obtained where the gas

is free from all tarry vapors. New sponge does not give as satisfactory results as old sponge with a small percentage of sulphur in it. Some of the sulphur compounds in the gas are of an organic nature, and a slow speed of gas is absolutely necessary to give the oxide time to act. The area of purifying boxes for the perfect purification of gas made from South Texas crude oil, which will run close to 2 per cent. of sulphur compounds, should be in the neighborhood of 2 sq. ft. of area for a single box per each foot of gas made per minute, and for safety, the gas should pass through two boxes or more."

When using thoroughly oxidized and hydrated material no difficulty will be found in getting the oxide to work properly at the start. If such difficulty should arise "a layer of old oxide in the box next to the outlet" (E. F. Sherman, '06), "a treatment with strong lime water" (P. E. Quigley, '06), "or a layer of lime 2 to 4 inches thick in the bottom of each box" (G. J. Swan, '06), "will remove the trouble."

7. The Proper Number of Boxes in a Purifying Set.

Relating to the proper number of purifying boxes, the question has entirely different aspects according to the capacity of the plant and the kind of gas made.

The general opinion, even concerning small plants, is that the manipulation of sets of two boxes is troublesome and that the addition of a third box makes purification surer, and more gas can be purified per box change and per bushel of oxide. ('03 QB 40.)

"While I may have decreased the cost of purifying by changing from three boxes (shallow ones) to two deep ones, yet I purified two and one-half times the quantity of gas per bushel with the three boxes that I have with the two boxes; and in the first case I never had a complaint of dirty gas, while I have in the latter." (Whipple.)

"There should be a balancing limit in purifying plant between capital charge and operating expense, the small number of boxes having naturally the least capital charge, implies also the largest cost for operating, and vice versa. Oxide which

shows foul will generally have a considerable remaining capacity for absorbing sulphur. In a three-box system, if the first box is not changed until the second begins to show foul, it will do a great deal of efficient work. The boxes should be as deep as a single layer of oxide will satisfactorily work, and this would seem to be materially in excess of current practice. In any event, the argument for a third box I consider to be very strong." (Lloyd.)

For large outputs there can, in the light of recent investigations, be but one answer. Carrol Miller, in describing to the New England Association of Gas Engineers a series of tests made at the Philadelphia Gas Works, says:

"The number of boxes would be different in different works, being dependent on the relation between operating and first cost; the number to be determined in order to allow the first box to stay in use, not as at the present time, until the outlet of the third or the middle of the fourth shows dirty, but until the first box is removing very few grains of H_2S. It seems quite possible that purifiers in sets of six or more will become common in the future." (A. G. L. J., Vol. LXXVII, page 586, reference by A. E. Forstall.)

8. Sulphur Permissible.

In deciding upon the advisable or sanitary amounts of the different impurities which may be left in an illuminating gas by a purifying system, it is well to note at this time that, during the past year, in the greatest stronghold of municipal gas testing—the city of London—the Committee on Metropolitan gas testing and the authorities of the gas companies have united in asking an important change in the amount of sulphur (in compounds other than H_2S) which may legally be delivered in the gas. The former regulations as to the complete removal of H_2S, and the removal of NH_3, to four grains per 100 cubic feet, are not subjects of criticism, but the clause, which provides that "the sulphur in compounds other than H_2S shall not be more than twenty-two grains per 100 cubic feet in winter, and seventeen grains in summer months," has been "recommended to be stricken off the statute book."

This is principally the work of Sir George Livesey, who instituted research on this subject by Dr. S. Rideal and Mr. Otto Hehner, in the interests of his company, the South Metropolitan Gas Company.

The gist of the report of the Parliamentary Committee was that the amount of sulphurous acid "actually found in the air of a room burning gas was much smaller than the calculated amount. They confirm the statements of Dr. Lehmann, of Manchester, that the limit of perception, by the human nose, of sulphurous acid is five volumes in a million and assert that when burning a gas with forty grains of sulphur per 100 cubic feet, the air would be vitiated with CO_2 to the extent of fifty volumes per 10,000 of air before the smell of sulphur would be perceptible. While it is not the purpose of the Board to take issue with this report, it may be safely said that the bad effects of a gas with forty grains of sulphur are not at all evident to the sense of smell.

With a properly equipped oxide purifying outfit it is possible to remove all but the faintest trace of H_2S from the gas ('04 QB 22, Mann, Davidson, Egner, Lomax). It frequently happens that in an overworked house, if not for a period just prior to changing, at least during the change operation, some unpurified gas escapes into the holder, but unless the conditions are exceptional this is usually decreased by dilution to a negligible quantity.

The total sulphur permissible—sulphur compounds other than H_2S—in good American practice, is taken to be 10 to 15 grains to the 100 cubic feet (Mann, Lindsey, K. M. Mitchell, '04 QB 21). With the better grades of gas coal used in the Eastern portion of the United States this figure is closely approached without recourse to unusual methods. Egner (same reference) points out that Newbigging's Handbook gives 22 grains, but it must be remembered that this is for English conditions, as mentioned above, with higher sulphur coal.

The sulphur limit that ought to be attained in view of the now widespread ambition of gas companies to provide the public with a superior light and fuel service, is another question. Lomax (same) contributes this comment:

9. Removal of CS_2.

While oxide of iron will remove all but an extremely faint trace of H_2S from illuminating gas, there remains, in illuminating gas made from coal or coke, an amount of sulphur, varying with the sulphur content of the coal or coke and the process used, equal to from five to seventy grains per 100 cubic feet of gas. This in the case of coal gas consists of carbon and hydrocarbon compounds of sulphur. In general five-sixths of the total amount occurs as CS_2, the remainder as thiophene, mercaptans, etc. An ordinary American gas coal with 1 per cent. of sulphur content, when distilled in a retort gives in the gas after oxide purification from eight to fifteen grains of sulphur per 100 cubic feet.

The conditions governing or favorable to absorption of CS_2 by fouled oxide of iron are given below by Dr. Harrop ('04 QB 91).

"From experiments made in Milwaukee's East Side works, I have concluded that the CS_2 absorbed in the boxes decreased with the temperature and the moisture, and increased with the amount of H_2S, the amount of air, the length of time allowed for revivification, the total amount of sulphur in all the boxes, and especially with the amount of sulphur in the first box, and with the frequency of revivification.

"One test lasting forty-eight hours indicated an absorption of 56 per cent. of the CS_2 entering the boxes. It should be stated that this material was frequently revivified in situ by the steaming method—air drawn through the idle boxes by means of a steam siphon."

The point made in the final sentence is that a wastefully frequent revivification must be taking place to secure this considerable absorption of CS_2. This investigation was originally reported to the 1903 meeting of the McMillin Managers Association, and it was argued that this absorptive effect, although real, held no commercial promise.

Calkins ('03 QB 5) reported thus on a test at Denver: "Oxide of iron by itself has no affinity for bisulphide of carbon and other sulphocarbon compounds, but when the oxide is fouled, and full of free sulphur in a finely divided state,

it seems to have the power of arresting a part of the bisulphide of carbon. By Harrop's method of separation and analysis for bisulphide of carbon, we made a test of our crude gas before it enters the purifying boxes, and found 8.1 grains of CS_2 per 100 cubic feet of gas, while a sample of our street gas gave only 4.0 grains per 100 cubic feet, showing a reduction of about 50 per cent."

It has been suggested (Lomax, Special) that the observed absorption of bisulphide by the free sulphur in foul oxide is due to the catalytic action of the free sulphur, where the small quantities of vapor of certain oils in the gas and CS_2 come in contact together with the sulphur.

The action of carbon disulphide on iron oxide was given in the 1903 Question Box as follows: "The chemical equation for this is,

$$2FeO + CS_2 = 2FeS + CO_2$$

The CS_2 passing through the FeO leaves its sulphur, forming ferrous sulphide, and leaving CO_2 as the inert residue.

By weight:

$$Fe = 56$$
$$O = 16$$
$$S = 32$$
$$C = 12.$$

$$2FeO\ (112 + 32) + CS_2\ (76)$$

Showing that 144 parts by weight will remove 76 parts by weight of CS_2."

It is scarcely necessary to say that this reaction does not take place.

K. M. Mitchell ('04 QB 29) contributes specifications of a recent German patent covering the application of a by-product of the beet sugar industry to the absorption of carbon disulphide. A complete account may be found in J. G. L., August 11, 1903.

In reply to the same question last year, Lomax said: "This subject has had my attention for the past ten years. I have tried every method mentioned in the patent literature of the United States, Great Britain and Germany. Some of the processes do the work but partially, and all of them are too

expensive to be considered from a practical standpoint when compared with the lime method. I have, however, succeeded in developing a process which avoids the objections above mentioned, and I expect shortly to be able to bring this matter before the gas fraternity."

The process mentioned, for which a patent has recently been issued depends on the fact that the reaction between aniline oil ($C_6H_5NH_2$) and CS_2 is greatly aided by the presence of free sulphur. So that by using, as the patentee does, the aniline oil by sprinkling it over the partly or fully spent oxide of an extra set of purifying boxes, or the bottom layer of each box of a single set, all the CS_2 may be removed if necessary. The complete chemical reaction is $2C_6H_5NH_2 + CS_2 + S = CS(C_6H_5NH)_2 + H_2S + S$. The free sulphur acts as a catalytic substance only and the oxide may be treated a number of times without injury. One-twelfth of a pound of aniline (costing $0.008) will remove sulphur, in the form of CS_2, from 1,000 cubic feet of gas to the extent of twenty grains per 100 cubic feet.

The cost of removal of CS_2 from gas depends (apart from the equipment of the plant and cost of labor) in the lime process, upon the percentage of CO_2 in the gas, the cost of lime, the speed of the gas, and the arrangement of the boxes. A study of the conditions of this process from a chemical and working standpoint will lead to the following conditions as constituting the cheapest process now in commercial use. There should be three sets of boxes in the house—the first two sets being filled with lime.

The first set of boxes are to be used for CO_2 removal and should be as large in area as possible, and, at least, four in number. The large investment will soon be returned in lime and labor saved; for CO_2 removal is four-fifths of the cost of CS_2 purification process, and the lime in this set should, therefore, be most thoroughly converted to $CaCO_3$. This set will remove a large portion of the H_2S as free sulphur, and as calcium sulphihydrate. The second set (for CS_2) should be one of four boxes of size equal to those of the first set. Each set is operated separately and the boxes in the first set rotated fast enough to protect the second set from all traces

of CO_2. The second set charged with moist slaked lime are manipulated in the same rotation as a set of oxide purifiers, when the chemical results show the sulphur content of the finished gas rising too high. (Compare Hauenstein '04 QB 58.)

A simple qualitative test for CS_2 for coal gas is described by Frank Ashmore as follows:

"Pass a stream of gas through benzol and treat the resulting solution with a benzol solution of phenyl hydrozone. A crystalline white precipitate which forms after shaking shows the presence of CS_2.

10. Cost of Purification.

Purification has undoubtedly kept pace with the general advancement by permitting the progress in gas engineering and chemistry to reduce its cost during the last decade. (Osborne, Thos. D. Miller, Freeport Gas Light & Coke Co., '03 QB 43.)

Doherty (same reference) analyzes purifying, operation and investment in considerable degree.

He states that the knowledge of the effect of velocity on purifying results has done more to cheapen the cost of purification than any other factor. Good scrubbing has also cheapened the cost. A good engineer should always consider both the fixed and operating costs of everything, aiming to get the lowest total costs. Money is often invested in purifying equipment (ground space, houses, boxes, valves, conveyors, etc.) for the sake of reducing operating expenses that is entirely unwarranted.

He then goes into some detailed figures showing the relation between investment charges and operating costs, and concludes with; First: That operating costs of purification are already so low as to be of minor importance; Second: That our most rigid attention should be directed towards reducing our investment for a given capacity. As, for example, he states further, we can afford to increase our operating expenses 100 per cent. if that will permit us to reduce our in-

vestment expenses by 25 per cent. This would result in about the same total cost for purification.

11. Purifying Houses.

The consensus of opinion as shown below ('03 QB 15) is for the necessity of houses "to protect the men when filling in winter, to protect the oxide from the elements when revivifying, and to protect the boxes in summer from extreme heat" (Elbert); "to maintain the temperature necessary for sulphiding the iron." (Gimper, Thos. D. Miller.) Others admit that while a house is either necessary or very desirable, it may be that they are not entirely necessary in the lower latitudes.

On the other hand the following description (Malone, same reference) shows that purification can be well conducted in the colder portions of the United States with the special Doherty-Butterworth box situated out of doors. It is certain, however, that when using high sulphur coals and lime as the purifying substance, a house is necessary. "We have installed at Madison, Wisconsin, a box lagged with double sheeting of ⅞ inch tongued and grooved boards, between which is a layer of building paper. The top is sheeted in a similar manner and also covered with galvanized iron. Openings provided with hood coverings are arranged in the top to permit of access to the filling doors, and four counter-weighted doors are provided on each side of the sheeting, near the ground, for ready access underneath the box.

"The entire cost of covering, including two coats of paint, was a little under three hundred dollars, which is many times less than the cost of the most cheaply constructed purifying house.

"A steam coil was provided under the box and, notwithstanding there was considerable cold weather during the past winter—one spell lasting four days, when the thermometer dropped to 15° below zero—we did not find it necessary to use any steam, and during this period, the temperature of the gas at the outlet of the box ranged from 50° to 60°, in fact, owing to the chemical actions which take place in the box,

the gas comes out of the box at a temperature at least equal to the temperature at the inlet, and usually, somewhat higher.

"We also have two old style boxes situated in a purifying house, and have found it necessary to keep steam on the purifying house whenever the thermometer dropped below 40°.

"To sum up in a few words: It is possible with the Doherty-Butterworth box, arranged, as our Madison box is arranged, and situated out of doors, to work without the use of any external heat whatever. This is impossible where ordinary boxes are put in an ordinary purifying house, as the radiation of the building is greater, owing to the fact that the area is so much greater. It is also necessary to thoroughly ventilate a purifying house, to guard against an explosive mixture of gas and air, and for this reason heating is absolutely necessary.

"The only possible objection that could be advanced against placing a purifying box out of doors is the difficulty that one might expect in maintaining the temperature, but the temperature can be maintained with this kind of a box more readily, even though situated out of doors, than in an ordinary box purifying house, and no bad effects can follow.

"It is, of course, necessary to have some sort of shed or building for revivifying spent oxide, but this building can be of very cheap construction, and it is hardly necessary to make it even fireproof, as the damage would be slight should it burn, and the loss would be trifling."

4/2562

DATE DUE

WITHDRAWN FROM
OHIO NORTHERN
UNIVERSITY LIBRARY

GAYLORD

PRINTED IN U.S.A.

HETERICK MEMORIAL LIBRARY

3 5111 00357 8394

Heterick Memorial Library
Ohio Northern University
Ada, Ohio 45810

DEMCO